# OPERATING INSTRUCTIONS

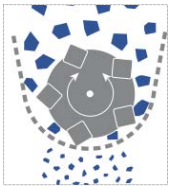

## Sizing and sieving machine «oscillating»
## MF-3

**Customer:** NOVARTIS SINGAPORE PHARMACEUTICAL SG-Singapore

**Ref. :** PRO-11-0078

**Serial Nr:** 11007821034




1 Index
2 Overview
3 Safety
4 Start-up
5 Operating instructions
6 Cleaning
7 Maintenance and support
8 Spare parts
9 Tools
10 Electric / Drive / Pneumatics
11 Certificates
12 ATEX (see aditional binder)
13 Outer elements Lifter (see aditional binder)
14 Tests protocol
15 Qualification & Validation IQ/OQ
16
17
18
19
20

# CONTENT OF OPERATING INSTRUCTIONS

**1 Index**
Content of operating instructions

**2 Overview**
Catalogue
Machine Assembly Drawing
Name plate
Packing list

**3 Safety**
General safety guidelines
Noise level
List of residual risks

**4 Start-up**
Transport and Handling
Checks
Connections

**5 Operating instructions**
Operating instructions
Rotor speed table
Breakdown diagnostics

**6 Cleaning**
Cleaning recommendation
Cleaning instructions
Chemical resistance of synthetic materials
Calculation of the area in contact with the product

**7 Maintenance and support**
Table of lubrication
Preventive maintenance plan
Maintenance
Tightening torques
Setting directions for the speed control wheel indicator
Transformation of oscillating to rotary installation
Parameter lists

**8 Spare parts**
Spare parts list
Assembly drawings
Order form

Professional Milling and Handling of Powders

## 9 Tools

Importance of sieve for fragmentation
Types of sieves
Storage of equipment
List of sieves and perforated plates

## 10 Electric / Drive / Pneumatics

Electric diagram / List of electric components
R & I Diagram / list of components
Motor technical Datasheet
Frequency converter documentation
Pneumatic diagram
List of pneumatic components
Filter technical datasheet

## 11 Certificates

EC Certificate / EC Declaration of Conformity
Certificate of Conformity according to EN 10204-2.2
Oils and lubricants certificates
Assembly drawing for material certificates EN 10204-3.1
Material certificate EN 10204-3.1 / Sieves material certificate EN 10204-3.1
Drawings for material certificate
FDA certificates
Surface quality notification
Surface quality certificate
Resistance of seals - certification
Material certificate Polyuretan (FESTO-TÜV)
Noise level Certificate
Speed calibration Certificate
Calibration Certificates

## 12 ATEX (EN 94/9/EC)

Additional information for Eex machine/Special conditions “X”
Notification of recognition of the quality assurance production
SNCH 03 ATEX 3486 X Certificate
SEV 06 ATEX 0133
Index of ATEX Certificates
ATEX Certificates

## 13 Outer elements

Lifting Tower documentation

## 14 Tests protocol

Quality Certificate ISO 9001 / ISO 14001
Test protocol Profitest 60204
FAT Protocol

## 15 Qualification & Validation IQ/OQ

Related documentation

# OVERVIEW



Professional Milling and Handling of Powders

FREWITT
DryMilling Division

## Oscillating, sizing and sieving mills MF

MF-3 • MF-6 • MF-8 • MF-Lab

### Efficient and forward-looking

### Operation / Concept

The oscillating mills MF guarantee optimum sizing results with excellent output for various products from the pharmaceutical, chemical and foodstuffs industries.

The oscillating rotor movement, constant speed and power input together with the large active sieve surface are essential for exceptionally gentle product sizing and minimal fines generation.

Dry and wet products can be sized and homogenised and agglomerates eliminated with the MF-Line. In particular, the MF-Line is also ideal for sizing those products that are sensitive to heat or difficult to process.

The MF-Line output can be further increased by using a rotating drive unit.

Depending on the end result desired, sieves with round wire, square wire, perforated plate or rasp can be used.

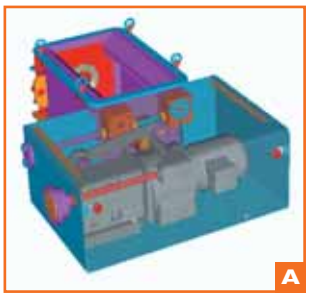


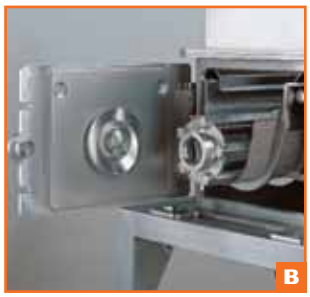

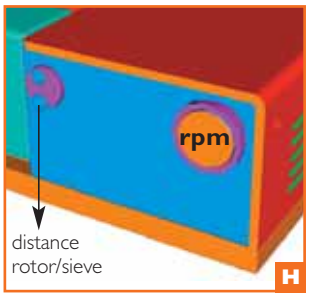

## Key Features / Advantages

**A** Compact modular construction of the machine and flexibility of use for customer-specific solutions

**B** The rigid screen support and the correct distance of rotor and sieve adjustment prevent metallic contact

**C** The sieve can be tensioned directly by the use of a single control

**D** The newly designed mill housing conform to the GMP and FDA guidelines permits an efficiently and hygienically cleaning either inline or manually

**E** Sieve, rotor and screen support can be easily installed and removed through the large front swing door

**F** Big choice of different types of sieve (round wire, square wire, rasp and perforated plate)

**G** The completely sealed finish protects the product from possible contamination

**H** Process relevant parameters can be easily and completely documented (distance rotor/sieve, product temperature, rotor speed, etc.)

**I** WIP with built-in wash jets for automatic cleaning

## MF-Line – gentle processing of difficult products

| **Execution** | ***Parts in contact with product*** | ***Parts not in contact with product*** |
|---|---|---|
| Material | 1.4435 / 1.4404 (AISI-316L) | 1.4301 (AISI-304) |
| Seals | FDA-compliant materials (silicon/PTFE) | various materials |
| Surfaces | Ra ≤ 0,8 µm polished | 220 grit, polished |
| Weld seams | ground and polished | pickled and brushed |
| **Mill** | Protection type IP-55 | |

## In-Line

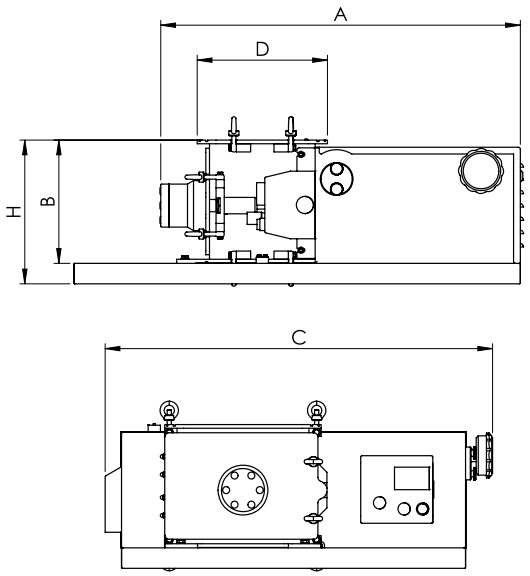


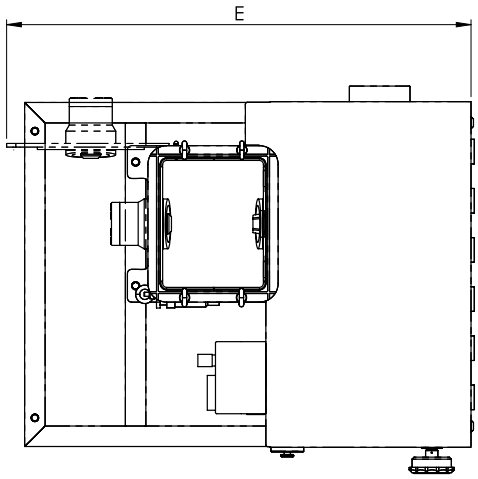


## Standard dimensions (subject to modifications)

| | | A | B | C | D | E | H | R | S | T | V | W |
|---|---|---|---|---|---|---|---|---|---|---|---|---|
| **MF-3** | Inline not Ex | 878 | 300 | 946 | 318 | 1142 | 351 | | | | | |
| | Inline Ex | | | | | | | | | | | |
| | With stand* | | | | | | 1301 | 1000 | 990 | 246,5 | 740 | 410 |
| **MF-6** | Inline not Ex | 1132 | 300 | 946 | 564 | 1388 | 351 | | | | | |
| | Inline Ex | | | | | | | | | | | |
| | With stand* | | | | | | 1301 | 1000 | 990 | 246.5 | 740 | 287 |
| **MF-8** | Inline not Ex | 1219 | 380 | 1049 | 564 | 1518 | 431 | | | | | |
| | Inline Ex | | | | | | | | | | | |
| | With stand* | | | | | | 1411 | 1030 | 1020 | 296,5 | 840 | 287 |

All dimensions are in mm, other dimensions on request.
*Dimension frame profile 50x50 mm

| | | |
|---|---|---|
| **Sieve types** | Dry sizing | Round or square wire<br>perforated plate/rasp |
| | Wet sizing | Fine sieve/round wire |
| **Distance rotor / sieve** | 1/2 the machine width/maximum 1 mm<br>(with/without rigid screen support) | |
| **Rotor speed** | Stepless, manually adjustable via mechanical handwheel | |

## Mobile

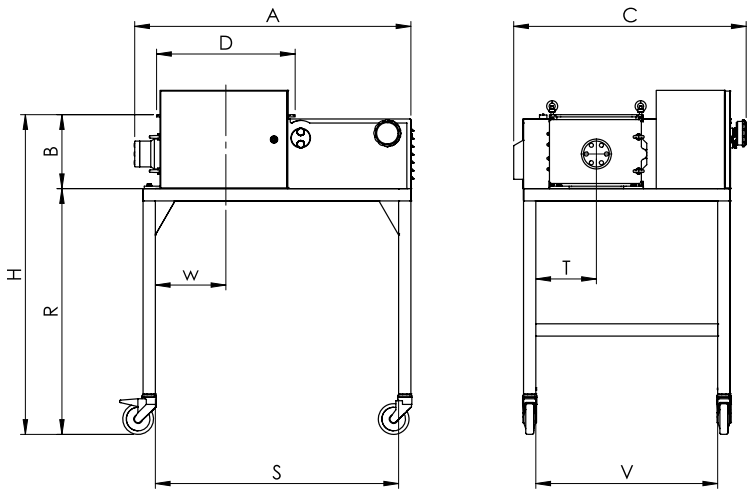


**Ex**

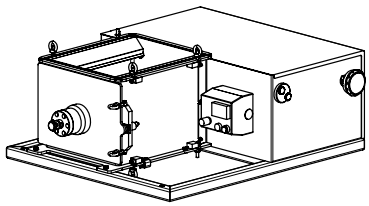

**Not-Ex**

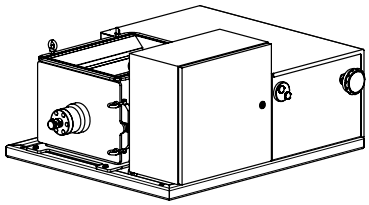

| Flowrate* | Active sieve op | Rotor speed | Power | Net weight |
|---|---|---|---|---|
| 500 kg | 190 $cm^2$ | 43–248 osc./min | 1,1 kW | 200 kg |
| 500 kg | 190 $cm^2$ | 43–248 osc./min | 1,1 kW | 200 kg |
| 500 kg | 190 $cm^2$ | 43–248 osc./min | 1,1 kW | 250 kg |
| 1000 kg | 434 $cm^2$ | 43–248 osc./min | 1,1 kW | 285 kg |
| 1000 kg | 434 $cm^2$ | 43–248 osc./min | 1,1 kW | 285 kg |
| 1000 kg | 434 $cm^2$ | 43–248 osc./min | 1,1 kW | 335 kg |
| 2000 kg | 775 $cm^2$ | 27–155 osc./min | 2,2 kW | 320 kg |
| 2000 kg | 775 $cm^2$ | 27–155 osc./min | 2,2 kW | 320 kg |
| 2000 kg | 775 $cm^2$ | 27–155 osc./min | 2,2 kW | 370 kg |

*Flowrate is depending on product characteristics and particle size.

## Selection and use of sieve – an important process know-how

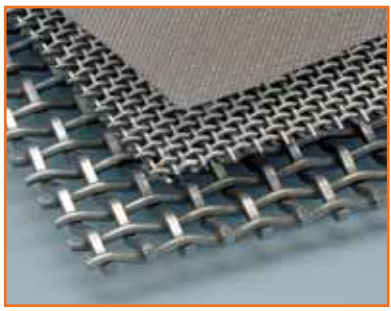

### Dry sizing

Very strong sieves are required for crushing and dry sizing. FREWITT has introduced sieves with square wire to the market, which provides remarkable advantages in comparison to conventional round wire sieves.

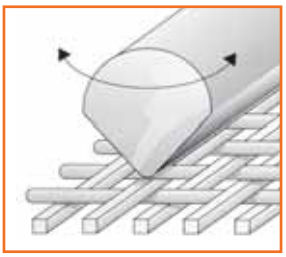

#### Square wire sieves

These sieves, developed by FREWITT, are made of square wire lengthways, parallel to the rotor arms and of round wires perpendicularly.

#### What are the advantages?

- Up to 15% more output
- Cutting effect due to the square wire

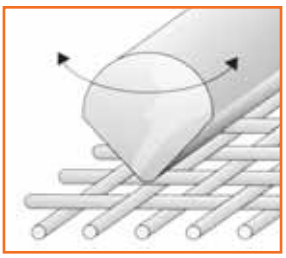

#### How to explain such improvements?

The sharp edge of the square wire provides a breaking effect as opposed to the crushing of the product against the curved surface of round wires. The material breaks on the edge of the square wire. Thus producing less fines with a higher yield (see sketch).

#### Round wire sieves

These sieves are adequate for sieving and loosening of lumped products.

### Wet sizing

For the sizing of wet products, a fine sieve with thin round wire is the perfect solution.

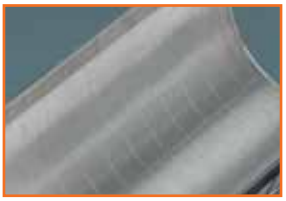

#### Round wire sieves

During wet sizing, the material has to be cut to obtain granules. Therefore the sieves are made of fine wires in proportion to the mesh size. This process can be compared with cutting butter. The thinner the wire, the less power is required.

### Rotor

The capacity of the sizing mill is obviously also dependent on the rotor. Its long experience has allowed FREWITT to develop the best form of rotor arms. Due to the hard work done by the rotor, wear occurs after extended use.

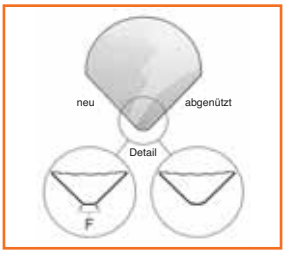


#### Consequences of wear?

- Lower output
- Change of the final grain size distribution
- More fines

#### When is renewal ot the rotor required?

- When the edges F are rounded-off

## Accessories

| Inlet funnel | | MF-3 | MF-6 | MF-8 |
|---|---|---|---|---|
| 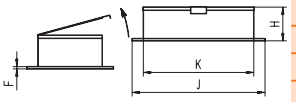 | F | 10 | 10 | 10 |
| | H | 150 | 150 | 150 |
| | J | 318x382 | 564x382 | 564x482 |
| | K | 246x310 | 492x274 | 492x374 |
| 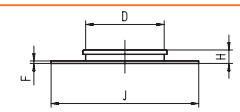 | D | 250 | 250 | 250 |
| | F | 10 | 10 | 10 |
| | H | 80 | 80 | 80 |
| | J | 318x382 | 564x382 | 564x482 |
| 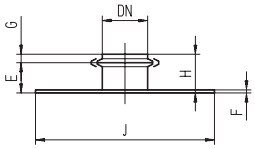 | DN* | 200 | 250 | 250 |
| | E | 100 | 100 | 100 |
| | F | 10 | 10 | 10 |
| | G | 28 | 28 | 28 |
| | H | 128 | 128 | 128 |
| | J | 318x382 | 564x382 | 564x482 |
| 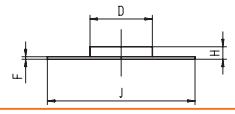 | D | 200 | 250 | 250 |
| | F | 10 | 10 | 10 |
| | H | 50 | 50 | 50 |
| | J | 318x382 | 564x382 | 564x482 |

| Outlet funnel | | MF-3 | MF-6 | MF-8 |
|---|---|---|---|---|
| 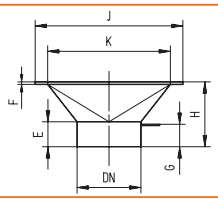 | DN* | DN200 | DN250 | DN250 |
| | E | 80 | 100 | 100 |
| | F | 10 | 10 | 10 |
| | G | 70 | 90 | 90 |
| | H | 180 | 260 | 260 |
| | J | 318x382 | 564X382 | 564x482 |
| | K | 246x310 | 492x310 | 492x410 |
| 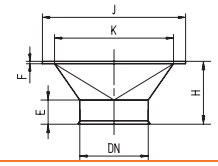 | DN* | DN200 | DN250 | DN250 |
| | E | 80 | 100 | 100 |
| | F | 10 | 10 | 10 |
| | H | 180 | 260 | 260 |
| | J | 318x382 | 564X382 | 564x482 |
| | K | 246x310 | 492x310 | 492x410 |
| 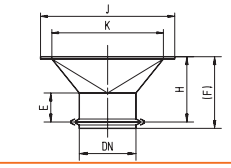 | DN* | DN200 | DN250 | DN250 |
| | E | 108 | 128 | 128 |
| | F | 236 | 316 | 316 |
| | H | 208 | 288 | 288 |
| | J | 318x382 | 564X382 | 564x482 |
| | K | 246x310 | 492x310 | 492x410 |
| 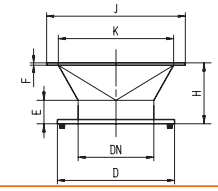 | DN* | DN200 | DN250 | DN250 |
| | D | 500 | 500 | 500 |
| | E | 80 | 100 | 100 |
| | F | 10 | 10 | 10 |
| | H | 180 | 260 | 260 |
| | J | 318x382 | 564X382 | 564x482 |
| | K | 246x310 | 492x310 | 492x410 |

All dimensions in mm / Other dimension and finishes on request
*DN ≙ Tri-Clamp ISO 2852 / DIN 32676

Fullfills the guidelines of ATEX


**Frewitt SA**
DryMilling Division
Route du Coteau 7
CH-1763 Granges-Paccot

Mailing address:
POB 615
CH-1701 Fribourg
Phone +41 (0) 26 460 74 00
Fax +41 (0) 26 460 74 01
E-Mail: info@frewitt.com
www.frewitt.com


Address agent

**General notes :**
**1. Material of construction :**
**-Product contact parts AISI 316/316L**
**-Non-product contact parts AISI 304/304L**
**2. Surface finish :**
**-Product contact part < Ra 0.4**
**-Non-product contact parts < Ra 1.4**
**3. All non-metallic parts in contact with product shall be FDA approved food grad**
**4. Design fabrication shall complywith GMP requirement with no sharp corners, dead legs, easily drainable and crevices free**

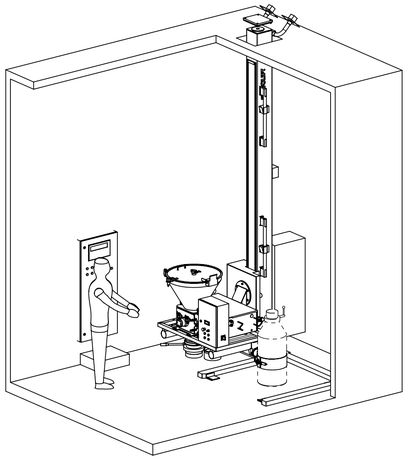

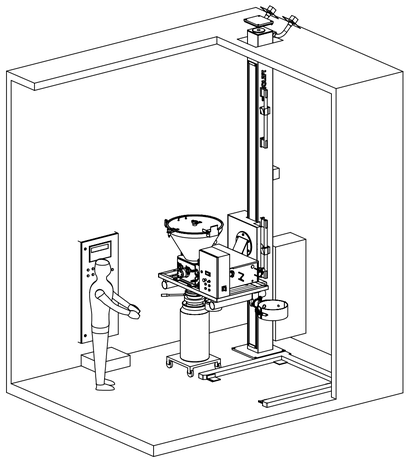

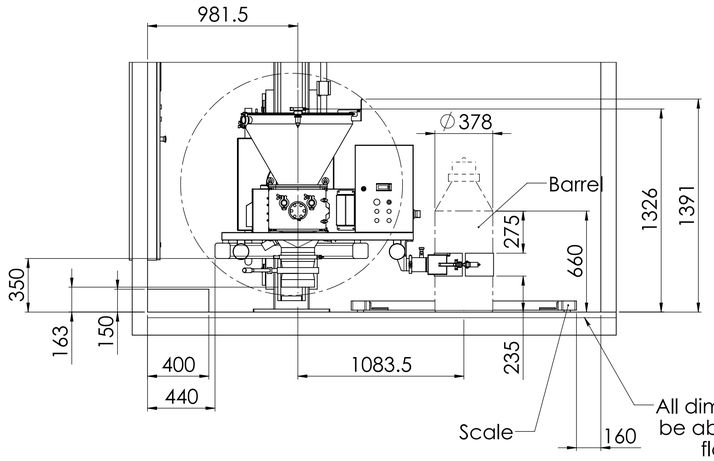


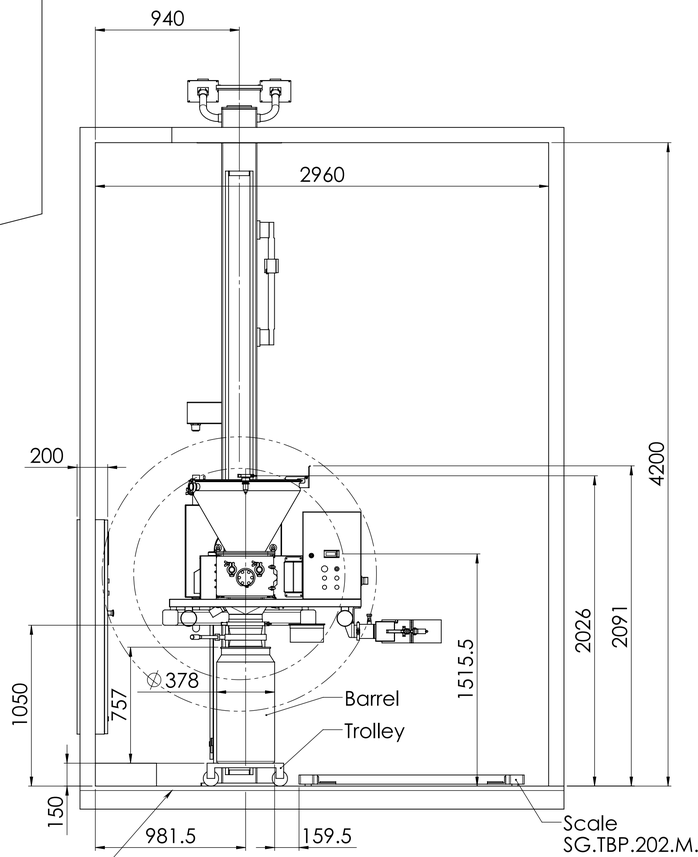


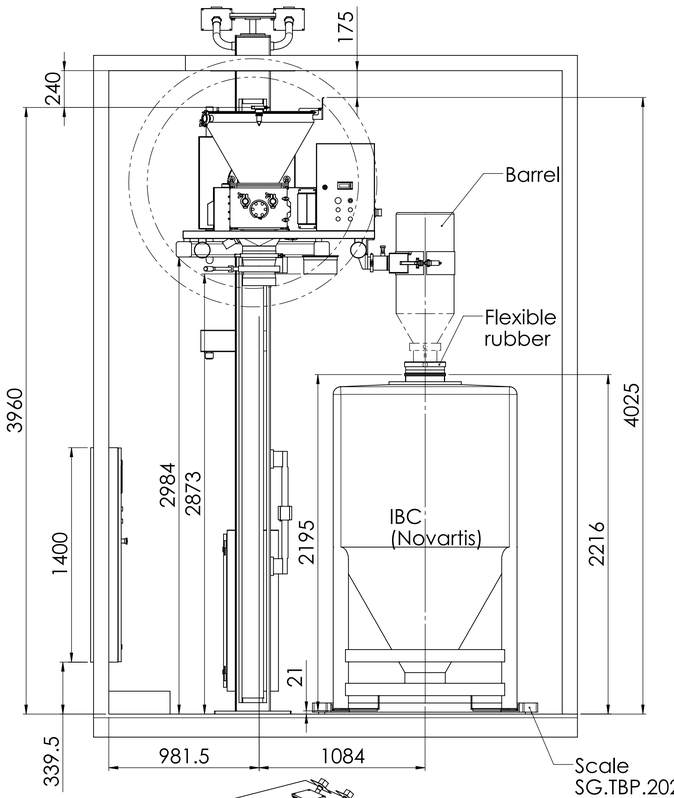


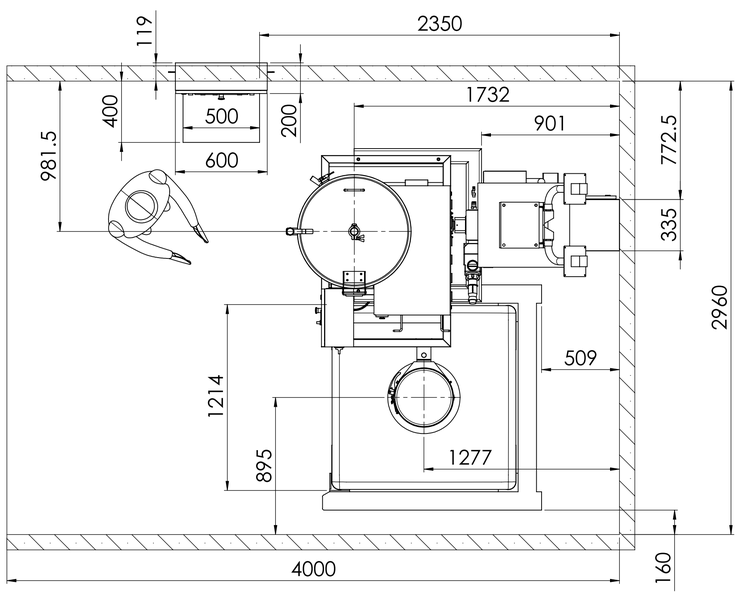


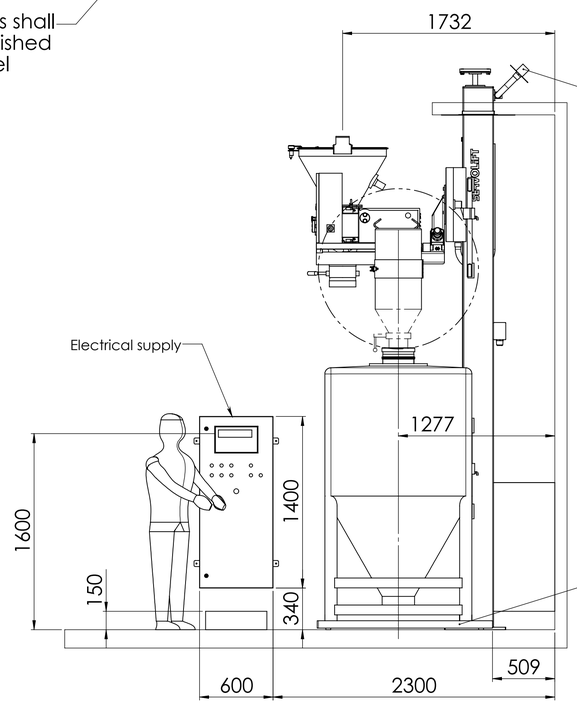


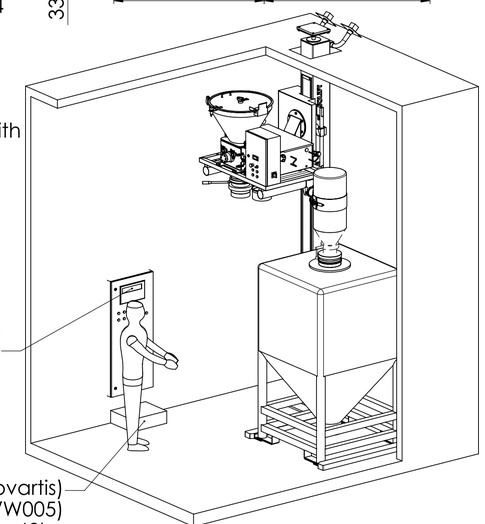


SG.TBP.202.M.5216/C001

SG.TBP.202.M.5216 &
SG.TBP.202.M.5216/C001
Total installed empty weight : 1500kg
Total operating weight : 2600kg

Sous réserve de modifications
Subject to modifications
Änderungen vorbehalten

| | | | | | | | |
|---|---|---|---|---|---|---|---|
| ATEX category | 1GD / 3D | | | | | Machined dim. | ISO 2768-m |
| Voltage [V] | 400V | Power [kW] | 1.1 / 2.5 | Scale | | Welded dim. | ISO 2768-c |
| Frequency [Hz] | 50Hz | Speed [min-1] | | % | | Designed | 07/06/2011 fhle |
| PRO-11-0078 / MF-3 | | | | | | Controlled | 06/09/2011 fhle |
| | | | | A1 | | Revised | 06/09/2011 fhle |
| | | | | | | Page | Ver. |
| | | | | | 465036-LAY | 1/2 | C |

Any and all information received by you from us shall be held and kept confidential and shall not be disclosed by you to any third party except with prior written consent of FREWITT SA.

FREWITT
Frewitt SA, Milling and Handling of Powders
P.O.B. 615, CH-1701 Fribourg, SWITZERLAND
tel. +41 26 460 74 00 / fax: +41 26 460 74 01
info@frewitt.com / www.frewitt.com

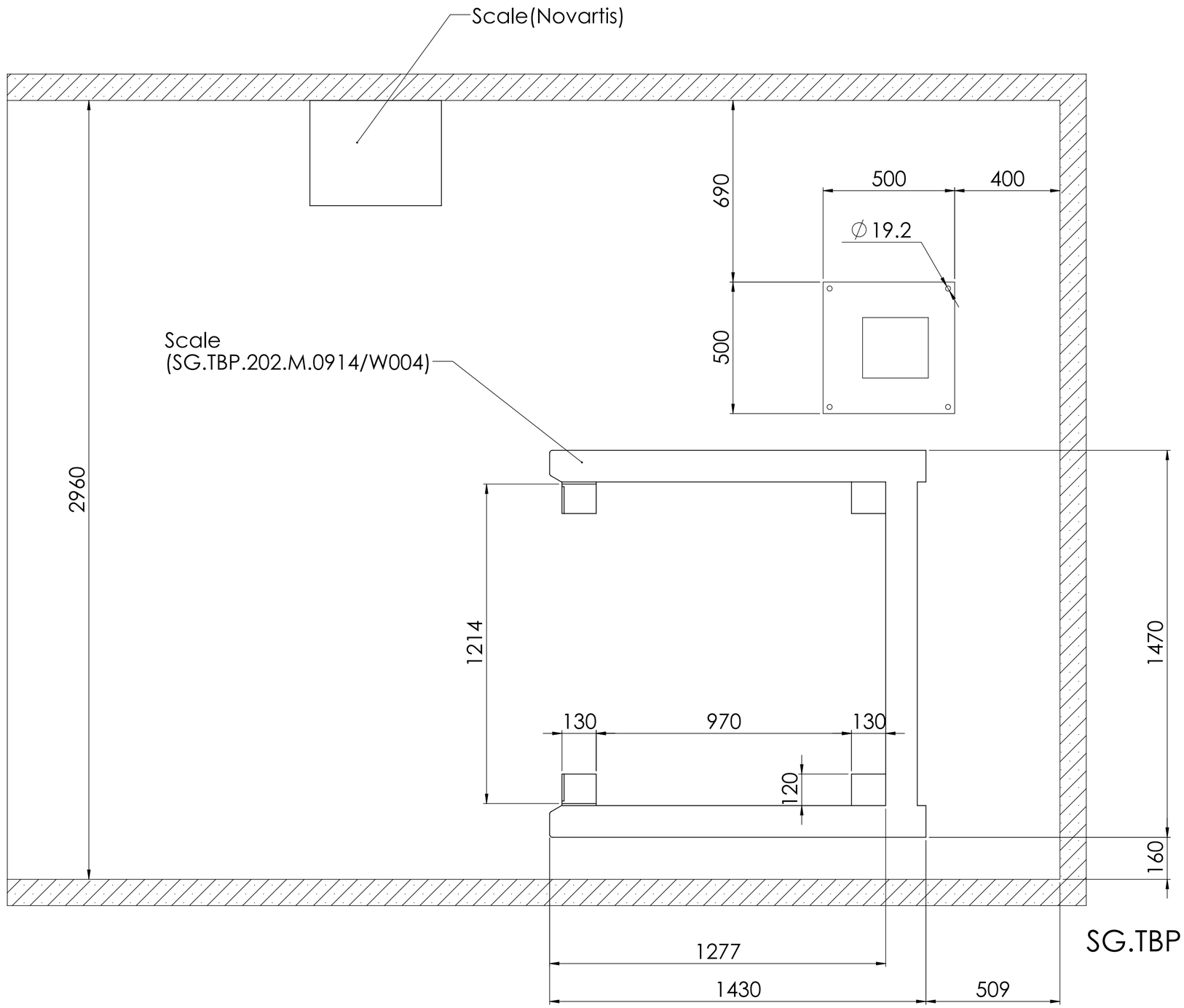


# SG.TBP.202.M.5216/C001

Sous réserve de modifications
Subject to modifications
Änderungen vorbehalten

| | | | | | | |
|---|---|---|---|---|---|---|
| ATEX category | 1GD / 3D | | | Scale | Machined dim. | ISO 2768-m |
| Voltage [V] | 400V | Power [kW] | 1.1 / 2.5 | % | Welded dim. | ISO 2768-c |
| Frequency [Hz] | 50Hz | Speed [min-1] | | | Designed | 07/06/2011 thle |
| PRO-11-0078 / MF-3 | | | | | Controlled | 06/09/2011 thle |
| | | | | A2 | Revised | 06/09/2011 thle |

Any and all information received by you from us shall be held and kept confidential and shall not be disclosed by you to any third party except with prior written consent of FREWITT SA.

FREWITT
Frewitt SA; Milling and Handling of Powders
P.O.B. 615, CH-1701 Fribourg, SWITZERLAND
tel: +41 26 460 74 00 / fax: +41 26 460 74 01
info@frewitt.com / www.frewitt.com

| | | |
|---|---|---|
| 465036-LAY | Page | Ver. |
| | 2/2 | C |

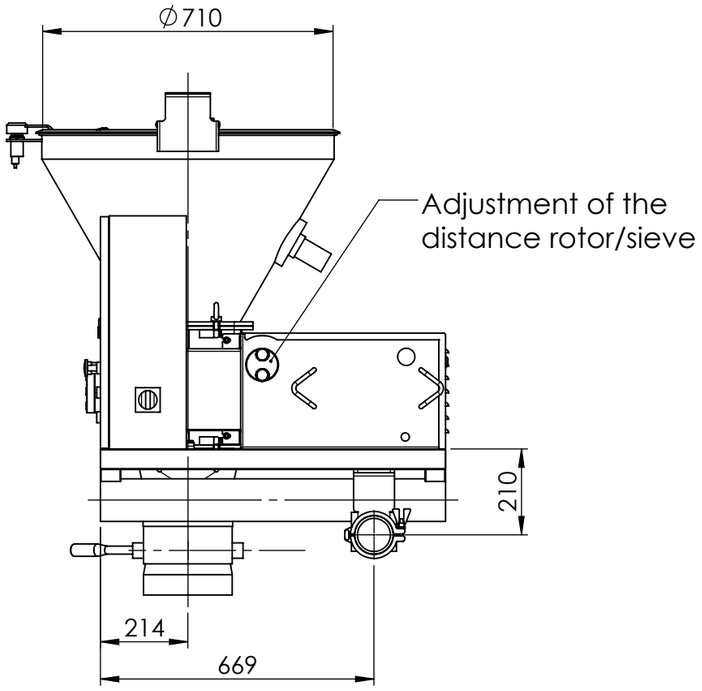


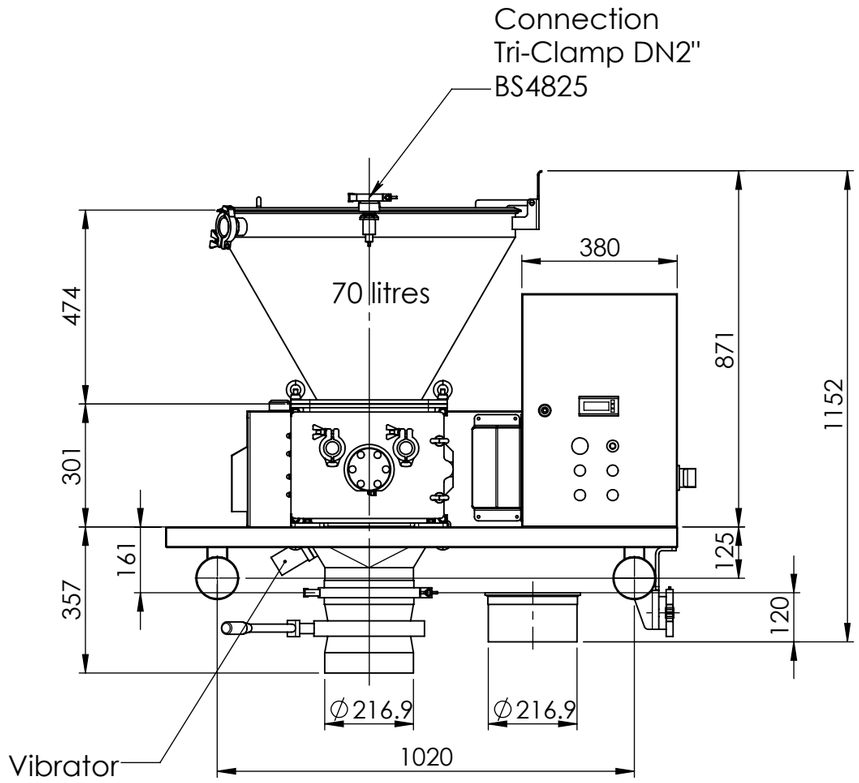


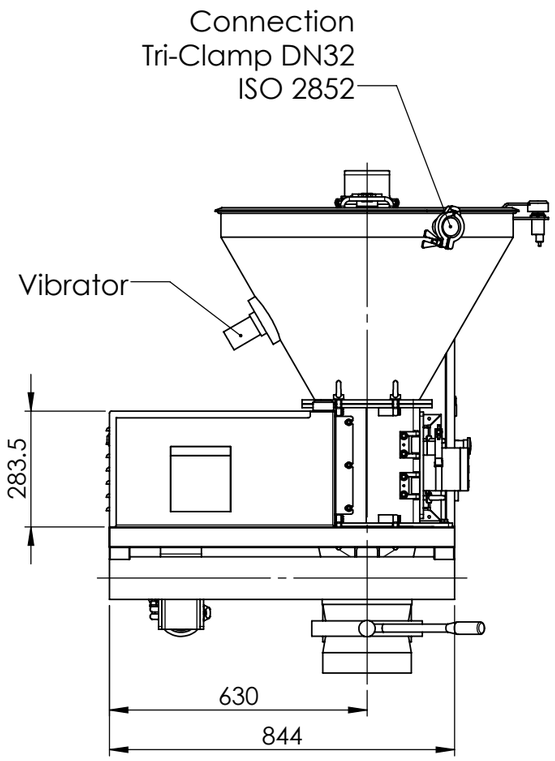


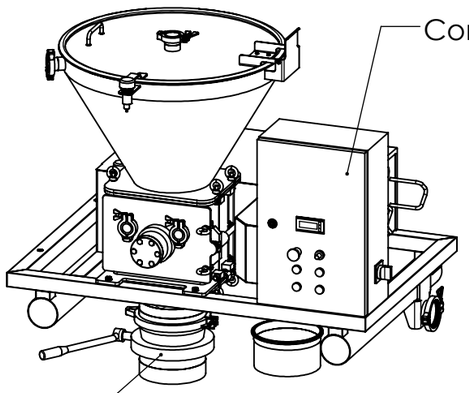


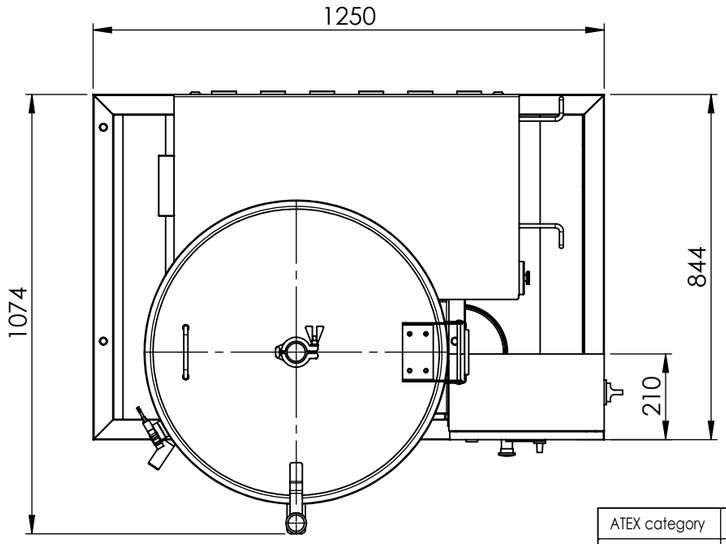


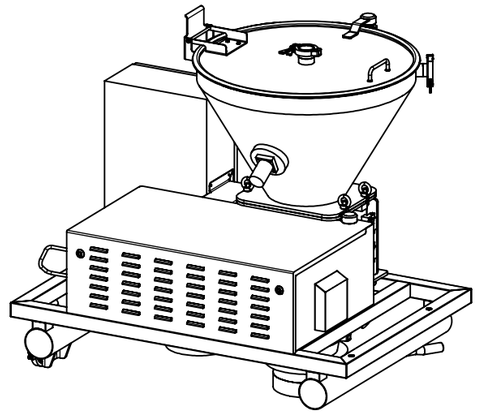

Sous réserve de modifications
Subject to modifications
Änderungen vorbehalten

| | | | | | | |
|---|---|---|---|---|---|---|
| ATEX category | 1GD / 3D | | | | Machined dim. | ISO 2768-m |
| Voltage [V] | 400 | Power [kW] | 1.1 | Scale | Welded dim. | ISO 2768-c |
| Frequency [Hz] | 50 | Speed [min-1] | 1m/sec | % | Designed | 09/06/2011 thle |
| PRO-11-0078 / MF-3 | | | | | Controlled | 22/07/2011 thle |
| | | | | A3 | Revised | 22/07/2011 thle |

Any and all information received by you from us shall be held and kept confidential and shall not be disclosed by you to any third party except with prior written consent of FREWITT SA.

FREWITT
Frewitt SA: Milling and Handling of Powders
P.O.B. 615, CH-1701 Fribourg, SWITZERLAND
tel: +41 26 460 74 00 / fax: +41 26 460 74 01
info@frewitt.com / www.frewitt.com

| | | | |
|---|---|---|---|
| 465107-LAY | Page | Ver. |
| | 1/1 | B |

# Name plate

**2**

Customer :

**Novartis Pharma**
**SG-Singapore**

Serial Nr :

**11007821034**

| | | | | | | |
|---|---|---|---|---|---|---|
| **Swiss Made** | FREWITT | | | | **CH-1763 Granges-Paccot SWITZERLAND** | |
| **Type** | MF-3 | **Year :** | 2011 | **Serial Nr:** | 11007821034 | |
| **Network :** | 400 V | **Frequency :** | 50 Hz | **Amp. :** | 16 A | |
| int. CE | **1258** | Ex | II | 1G c IIB T4 X<br>1D c T130°C IP65 X | | |
| ext. CE | **1258** | Ex | II | 3D c Ex tD T130°C IP65 X | | |
| **Please read the user manual before start-up !** | | | | | | |

FREWITT
ProFilling Division

Order address
NOVARTIS SINGAPORE PHARMACEUTICAL
MANUFACTURING PTE LTD
10, Tuas Bay Lane
SG - 69115 Singapore
Singapore

Delivery address
NOVARTIS SINGAPORE
PHARMACEUTICAL
MANUFACTURING PTE LTD
10, Tuas Bay Lane
SG - 637461 Singapore
Singapore

Invoice address
NOVARTIS SINGAPORE PHARMACEUTICAL
MANUFACTURING PTE LTD
10, Tuas Bay Lane
SG - 637461 Singapore
Singapore

## Delivery note no. BLC-11-1704

| | | | |
|---|---|---|---|
| Date : | 12.09.2011 | Customer document : | 4500260529 |
| Customer : | 686023 | Document date : | 15.04.2011 |
| | | N° douane : | |
| | | Incoterms 2010 : | _DDU, Novartis Singapore |
| Contact Frewitt : | LEFEBVRE Claude | Customer contact : | PANICKER Shreekumar |
| Phone : | +41 (0)26 460 74 67 | | |
| E-mail : | c.lefebvre@frewitt.com | | |

| Position | Product | Designation | Unit | Qty |
|---|---|---|---|---|
| | | our quotation OFC-11-0352-3 dated april 13, 2011 | | |
| 10 | 250042 | Frewitt DelumpWitt Crusher & Grinding | Pce | 1 |
| 20 | 250042 | Frewitt MFH-6 Hammermill with explosion proof construction | Pce | 1 |
| 30 | 250042 | Two pneumatic transport system for filling IBC container | Pce | 1 |
| 40 | 250042 | Lifting tower with MF-3 | Pce | 1 |
| 50 | 250042 | FAT, site installation, SAT, commissioning, IQ/OQ support, operator training, documentation, packaging, sea transport DDU for DelumpWitt | Pce | 1 |
| 60 | 250042 | FAT, site installation, SAT, commissioning, IQ/OQ support, operator training, documentation, packaging, sea transport DDU for MFH-6 | Pce | 1 |

FREWITT
ProFilling Division

## Delivery note no. BLC-11-1704

| Position | Product | Designation | Unit | Qty |
|---|---|---|---|---|
| 70 | 250042 | FAT, site installation, SAT, commissioning, IQ/OQ support, operator training, documentation, packaging, sea transport DDU for PTS system | Pce | 1 |
| 80 | 250042 | FAT, site installation, SAT, commissioning, IQ/OQ support, operator training, documentation, packaging, sea transport DDU for MF-3 | Pce | 1 |
| 90 | 250042 | Additional cost for air freight for DelumpWitt | Pce | 1 |
| 100 | 250042 | Additional cost for air freight for MFH-6 | Pce | 1 |
| 110 | 250042 | Additional cost for air freight for PTS system | Pce | 1 |
| 120 | 250042 | Additional cost for air freight for MF-3 | Pce | 1 |
| 130 | 250042 | Additional cost for integration of 4 Mettler scales | Pce | 1 |
| 140 | 250042 | ProFibuscard | Pce | 1 |
| 150 | 250042 | Spare parts | Pce | 1 |

For details of the packing, see attached packing list FAP-11-0290

**FREWITT Fabrique de machines SA**

(without signature)



Frewitt fabrique de machines SA
Route du Coteau 7
CH-1763 Granges-Paccot
Switzerland

Postal address:
Box 615
CH-1701 Fribourg
Switzerland

info@frewitt.com
www.frewitt.com
P +41(0)26 460 74 00
F +41(0)26 460 74 01

No. TVA 140 590/Customs account 6642-4
IBAN EUR: CH90 0483 5036 3818 0200 0
IBAN CHF: CH27 0483 5036 3818 0100 0
IBAN USD: CH92 0483 5036 3818 0215 8
Credit Suisse CH-3001 Bern/Swift CRESCH ZZ80A

# PACKING LIST



Date 12/09/2011 O/ref.ygr/alcr

Invoice FAP-11-0290/BLC-11-1704

FREWITT
ProFilling Division

*Delivery address*

**NOVARTIS SINGAPORE**
**Pharmaceutical Manufacturing Pte Ltd.**
**10 Tuas Bay**
**637461 Singapore**
**Singapore**

Contact:
**Mr Panicker Shreekumar**
Phone: +65 63047129
Fax +65 63047150

**Novartis purchase order 4500260529 and 4500276262**
**Frewitt PRO-11-0075, 11-0076, 11-0077, 11-0078**

| Item Nr | Quantity | Description | | |
|---|---|---|---|---|
| **Consignment PRO-11-0075 (1 Tri wall pack)** | | | | |
| | | **TRIWALL PACK: 1**<br>**Dimensions: 265cm x160cm x215cm**<br>**Weight: Net: 933 Kg Gross: 1075 Kg** | Secure FRET : 8505 to 8519 | |
| | 1 | Hammermill Frewitt type MFH-6 consisting of | | |
| | | Inlet hopper with gasket | | |
| | | Outlet hopper | | |
| | | Front door | | |
| | | Housing | | |
| | | Rotor with 24 fixed hammers | | |
| | | Sieve | | |
| | | Drive 4.0 KW motor with direct drive | | |
| | | Control panel | | |
| | | Gas control system | | |
| | | Dosing device AL-150 Diary | | |
| | | Dosing device AL-200 Diary | | |
| | | Support frame for the installation | | |
| **Consignment PRO-11-0076 (5 pallets)** | | | | |
| | | **PALLET 1**<br>**Dimensions: 165cm x 105cm x 85cm**<br>**Weight: 366 Kg Net: Gross: 366 Kg** | Secure FRET: 8381 to 8391 | |
| | 1 | Grinding Unit consisting of | | |
| | | Inlet milling head with special Tri-Clamp flange | | |
| | | Safety device inlet magnetic safety switch ELOBAU at inlet | | |
| | | Outlet milling head with Tri-Clamp flange DN300 (ISO 2852) | | |
| | | Bearing rotor drive housing | | |
| | | Connection channel between machine head and control box | | |



Frewitt fabrique de machines SA
Route du Coteau 7
CH-1763 Granges-Paccot
Switzerland

Postal address:
Box 615
CH-1701 Fribourg
Switzerland

info@frewitt.com
www.frewitt.com
P +41(0)26 460 74 00
F +41(0)26 460 74 69

No. TVA 140 590/Customs account 6642-4
IBAN EUR: CH90 0483 5036 3818 0200 0
IBAN CHF: CH27 0483 5036 3818 0100 0
IBAN USD: CH92 0483 5036 3818 0215 8
Credit Suisse CH-3001 Bern/Swift CRESCH ZZ80A

FREWITT
ProFilling Division

| | | | | |
|---|---|---|---|---|
| | 1 | Conical Rasp 3mm 436241 | | |
| | | Rotor with 2 arms | | |
| | | Motor with 5.5KW with frequency converter | | |
| | | Motor protection | | |
| | | Gas control system | | |
| | | Outlet funnel Tri-Clamp | | |
| | | Outlet funnel for Cleaning | | |
| 464871 | | Set of spare parts MFH-6 PRO-11-0075 | | |
| 464871 | | Set of spare parts DelumWitt PRO-11-0076 | | |
| 464882 | | Set of spare parts PTS PRO-11-0077 | | |
| 465595 | | Set of spare parts PRO-11-0078 | | |
| | | | | |
| | | **PALLET 2**<br>**Dimensions: 240cm x 220cm x 195cm**<br>**Weight: 430 Kg Net: Gross: 618 Kg** | Secure FRET: 8392 to 8406 | |
| | 1 | Inlet hopper with inlet cone | | |
| | | Control panel | | |
| | | PC with printer ATEC | | |
| | | Spare parts | | |
| | | Tri-Clamp connections | | |
| | | Lateral protection for the Frame | | |
| | | **PALLET 3**<br>**Dimensions: 155cm x 135cm x 85cm**<br>**Weight: 155 Kg Net: Gross: 212 Kg** | Secure FRET: 8407 to 8417 | |
| | 1 | Crusher module complete | | |
| | | Tools for Crusher module | | |
| | | Frame for assembly of the crusher module | | |
| | | Ventilation piping | | |
| | | **PALLET 4**<br>**Dimensions: 456cm x 240cm x 195cm**<br>**Weight: 1'650 Kg Net: Gross:1'980 Kg** | | |
| | | Tubular steel support frame complete | | |
| | | **PALLET 5**<br>**Dimensions: 241cm x 121cm x 94cm**<br>**Weight: 197 Kg Net: Gross: 300 Kg** | Secure FRET: 8418 to 8433 | |
| | | Control cabinets for DelumpWitt and PTS | | |
| **Consignment PRO-11-0077 (3 pallets)** | | | | |
| | | **PALLET 1**<br>**Dimensions: 165cm x 165cm x 235cm**<br>**Weight: 251 Kg Net: Gross: 336 Kg** | Secure FRET: 8462 to 8473 | |
| 464871 | 1 | Tank IBC GEA 2000 L | | |



Frewitt fabrique de machines SA
Route du Coteau 7
CH-1763 Granges-Paccot
Switzerland

Postal address:
Box 615
CH-1701 Fribourg
Switzerland

info@frewitt.com
www.frewitt.com
P +41(0)26 460 74 00
F +41(0)26 460 74 69

No. TVA 140 590/Customs account 6642-4
IBAN EUR: CH90 0483 5036 3818 0200 0
IBAN CHF: CH27 0483 5036 3818 0100 0
IBAN USD: CH92 0483 5036 3818 0215 8
Credit Suisse CH-3001 Bern/Swift CRESCH ZZ80A

FREWITT
ProFilling Division

| | | | |
|---|---|---|---|
| | | **TRI-WALL PACK 2**<br>**Dimensions: 290cm x 210cm x 165cm**<br>**Weight: 525Kg Net: Gross: 725Kg** | Secure FRET: 8486 to 8504 |
| | 4 | Mettler Toledo Scale | |
| | | Multijector vacuum pump | |
| | | Safety filter for vacuum pump | |
| | | Control box pneumatimer | |
| | | Support for PTS | |
| | | Docking system manually | |
| | 2 | Mobile Frame | |
| | | 2-Way diverter valve DN40 | |
| | | Electric Cabinet | |
| | | **TRI-WALL PACK 3**<br>**Dimensions: 170cm x 170cm x 145cm**<br>**Weight: 195Kg Net: Gross: 277Kg** | Secure FRET: 8474 to 8485 |
| | | Multijector vacuum pump | |
| | | Safety filter for vacuum pump | |
| | | Control box pneumatimer | |
| | 2 | Wall support for PTS | |
| | | Docking system manually | |
| | | **Consignment PRO-11-0078 (1 pallet)** | |
| | | **PALLET 1**<br>**Dimensions: 220cm x 180cm x 195cm**<br>**Weight: 382Kg Net: Gross: 550Kg** | Secure FRET: |
| | 1 | Sizing mill Frewitt type MF-3 consisting of | |
| | | Inlet plate with cover | |
| | | Outlet funnel | |
| | | Front door | |
| | | Housing | |
| | | Rotor with 5 arms | |
| | | Sieve | |
| | | Stepless variable drive with motor 1.0 KW with speed adjustment | |
| | | Control panel | |
| | | Gas control system | |
| | | Support frame for the installation | |
| | | Protection over the motor and drive unit, with ventilation | |
| | | Mobile stand for cleaning | |
| | | Drum D375 70L with cover 461236 | |
| | | Manual valve 438420 | |
| | | Adaptation part for Rubber 461512 | |
| | | Adaptation part for Rubber for IBC 465220 | |
| | | Drum holder with rotation unit 461237 | |
| | | Electrical Cabinet for Servolift hoist | |



- Frewitt fabrique de machines SA
Route du Coteau 7
CH-1763 Granges-Paccot
Switzerland
- Postal address:
Box 615
CH-1701 Fribourg
Switzerland
- info@frewitt.com
www.frewitt.com
P +41(0)26 460 74 00
F +41(0)26 460 74 69
- No. TVA 140 590/Customs account 6642-4
IBAN EUR: CH90 0483 5036 3818 0200 0
IBAN CHF: CH27 0483 5036 3818 0100 0
IBAN USD: CH92 0483 5036 3818 0215 8
Credit Suisse CH-3001 Bern/Swift CRESCH ZZ80A

FREWITT
ProFilling Division

| | | Consignment Servolift (3 pallets) | |
|---|---|---|---|
| | | **PALLET 1**<br>**Dimensions: 485cm x 70cm x 120cm**<br>**Weight: 460 Kg Net: Gross: 662 Kg** | |
| | 1 | Column | |
| | 1 | Transportation band | |
| | 2 | Headless screws | |
| | 2 | M10 Clape | |
| | 1 | Housing connection | |
| | 4 | Rod seals and cartridges | |
| | 12 | M12 Clape | |
| | 1 | Ceiling rosette closure | |
| | 7 | Sealing cartridges | |
| | 7 | Sealing rods and dynamic sets Hilti | |
| | 1 | Hilti cartridge | |
| | 7 | M12 Cope | |
| | 1 | Key dig | |
| | 1 | Closing cover | |
| | 4 | Fischer M8 pegs | |
| | 4 | ISO 7090-8 plates | |
| | 4 | 6 sides shallow screws and stopping rings | |
| | 4 | Rounded screws | |
| | 3 | Control panels | |
| | | **PALLET 2**<br>**Dimensions: 155cm x 115cm x 150cm**<br>**Weight: 273 Kg Net: Gross: 393 Kg** | |
| | 1 | Control cabinet | |
| | 1 | Arm | |
| | | **PALLET 3**<br>**Dimensions: 45,5cm x 85cm x 125cm**<br>**Weight: 735 Kg Net: Gross: 970 Kg** | |
| | 1 | Column | |
| | 2 | Screws headless | |
| | 2 | M10 Cope | |
| | 1 | For storage tarp | |
| | 1 | Cover bow | |
| | 4 | Upat Multi-cones sealing cartridge | |
| | 4 | M16 Copes | |
| | 4 | Sealing rods | |
| | 1 | V-seal | |
| | 6 | 6 sides shallow screws and stopping rings Nord-Lock | |
| | 6 | M16 copes | |
| | 1 | Distribution cabinet | |
| | 1 | Square head key | |



Frewitt fabrique de machines SA
Route du Coteau 7
CH-1763 Granges-Paccot
Switzerland

Postal address:
Box 615
CH-1701 Fribourg
Switzerland

info@frewitt.com
www.frewitt.com
P +41(0)26 460 74 00
F +41(0)26 460 74 69

No. TVA 140 590/Customs account 6642-4
IBAN EUR: CH90 0483 5036 3818 0200 0
IBAN CHF: CH27 0483 5036 3818 0100 0
IBAN USD: CH92 0483 5036 3818 0215 8
Credit Suisse CH-3001 Bern/Swift CRESCH ZZ80A

FREWITT
ProFilling Division

| | | | |
|---|---|---|---|
| | 4 | Hex head screws | |
| | 4 | SW19 Copes | |
| | | **Consignment Assembly Tools (1 pallet)** | |
| | | **PALLET 1**<br>**Dimensions: cm x cm x cm**<br>Weight: Kg Net: Gross: Kg | SECURE FRET: |

Shipment through Interfracht

Best regards

**Frewitt fabrique de machines S.A.**
*ProFilling Division*
*Aline J. Crettol*



Frewitt fabrique de machines SA
Route du Coteau 7
CH-1763 Granges-Paccot
Switzerland

Postal address:
Box 615
CH-1701 Fribourg
Switzerland

info@frewitt.com
www.frewitt.com
P +41(0)26 460 74 00
F +41(0)26 460 74 69

No. TVA 140 590/Customs account 6642-4
IBAN EUR: CH90 0483 5036 3818 0200 0
IBAN CHF: CH27 0483 5036 3818 0100 0
IBAN USD: CH92 0483 5036 3818 0215 8
Credit Suisse CH-3001 Bern/Swift CRESCH ZZ80A

# SAFETY



Professional Milling and Handling of Powders

## Safety

In order to use the installation in a completely safe manner, it is indispensable to follow the instructions stated in these operating instructions. All safety parts protecting either the operators and/or the machine (such as safety switches, safety grids, etc...) must not in any case be dismounted, modified or by-passed. Follow specifically the guidelines indicated by the following symbols:

## Symbols

The following symbols are employed to provide practical guidelines regarding safety and operation of the installation. They advise the user against possible accidents to both person and equipment and provide practical guidelines for the use of the installation.

**Danger:** This symbol warns you regarding mortal danger or serious injuries. These types of accidents may be produced when the directions within these operating instructions are not strictly or only partially followed.

**Warning:** This symbol warns you about a potential risk regarding injuries, installation damage or other serious damages. An accident can occur if the directions in the operating instructions are not or only partially followed. Disregard of these may cause the manufacturer's warranty to be void.

**Risk of generation of electrostatic charges:** This symbol warns you about a risk of fire or explosion that may be generated due to electrostatic discharges. This risk can be substantially decrease by following the directions provided in these operating instructions step by step.

**Recommendation:** This symbol provides you with complementary indications about installation allowing an optimum use of your installation.

**Maintenance:** Maintenance or development jobs that are represented by this symbol should only be carried out by qualified maintenance personnel that have the specific skills to do so, and have read these operating instructions. They should only use specific tools designated for this purpose.

## Operators and maintenance staff

Operators and maintenance staff should provide themselves with appropriate personal protection and have prior knowledge of the directions contained within these operating instructions for every use and maintenance intervention.

The start-up of the installation should only be carried out by personnel specifically trained for such purpose. Work on electric components should be carried out only by qualified and trained staff.

Initial adjustments are carried out in the factory. In normal operation mode, installation only requires the supervision of the operator.

Regarding cleaning and maintenance tasks, these should be only carried out by personnel authorized and trained for such activity. The directions provided in these operating instructions should be carefully followed.

In order to avoid any risk of getting trapped or caught up in the machine, users of the installations shouldn't wear baggy clothes. Long hair should be tied back or retained in a proper way (net, rubber band, etc.)

## Electrostatic charging hazards

Incorrect earthing may lead to electrostatic charging, which could cause an explosion. Earth connections must be checked regularly.



Professional Milling and Handling of Powders

## Electrical hazards

In the event of contact with live or current-carrying parts, there is a risk of electrical discharge which could cause serious injury or death. Never touch damaged cables. Before carrying out any maintenance work on the electrical equipment, the installation must be turned off and disconnected from the power supply. Replace defective cables or fuses immediately.

## Compressed air hazards

The release of compressed air gives rise to a mechanical risk of injury, particularly for the eyes but also for the ears. When handling the pneumatic system, wear glasses and ear protection. When servicing the compressed air system, the main inlet for the compressed air must be closed and the system cleared using a discharge valve. The pneumatic oil is toxic. Do not ingest. Avoid contact with the eyes and mucous membranes. Beware of ejection and oil residues.

## Product hazards

These operating instructions are only concerned about the installation's operation and use. The specific risks resulting from the products to be transformed are not included in these operating instructions and should be discussed separately. The person responsible for the installation should state clearly in his/her own operating instructions the risks and safety instructions inherent to the products to be transformed. Operators should follow these indications carefully.

## Residual risks

Residual risks are those unforeseeable risks that, despite proper safety precautions, cannot be excluded when using the installation. These residual risks are not easy to detect and may be a possible health hazard, related to injuries or danger (see European standards EN ISO 12100-1, paragraph 4). If such a risk arises, the installation should be switched off immediately and the person responsible for the installation should be advised. He/she should apply all appropriate measures in order to definitely avoid these risks. In all such cases the manufacturer should always be informed.

## Other risks

The installation under operation can have a high noise level. When operating the installation, wear ears protection.

## Integration

If the installation of Frewitt has to be integrated in a final installation, the user should ensure that the proper safety systems are operational in order to avoid the introduction of members at the fragmentation zone near the installation's inlet-outlet.

## Warranty Limit

The warranty of Frewitt is valid in so far as the installation is operated within the technical limits, conditions and applications stated in the customer specifications and confirmed by Frewitt.
The warranty of Frewitt is not valid if the customer or the user does not comply with operating instructions and/or if modifications are done without the written consent of Frewitt.

## Limitation of responsibility of the product manufacturer

Frewitt provides an installation that complies with CE standards regarding safety or the applicable standards in the destination's country. Any damage to people, material and merchandises belonging to the user or a third party due to the use or maintenance of the installation is the exclusive responsibility of the customer, respectively the user.

## Emergencies

In the event of an accident involving injury, immediately apply recognised first aid procedures and inform the medical personnel.

Professional Milling and Handling of Powders

## Information about explosives zones

Since a dangerous, potentially explosive atmosphere may not exist all the time within an area with an explosion hazard, these areas are divides into zones, according to the probability of the dangerous atmosphere being present. Here an extract of classification.

Gases, vapors, mists

| Ex zones | Covers areas in which a dangerous, potentially explosive atmosphere is ... | We are in general… | Operation without effective ignition source. |
|---|---|---|---|
| **Zone 0** | Present continuously or for lengthy periods. [> 1000 hours/year} | Only inside containers or the space inside apparatus. | - Fault-free operation<br>- Rare operational faults<br>- Frequent operational faults |
| **Zone 1** | Present occasionally. [10 - 1000 hours/year] | The immediate surroundings of zone 0, of loading openings, filling/emptying devices, etc. | - Fault-free operation<br>- Frequent operational faults |
| **Zone 2** | Present infrequently and then only for a short time. [<10 hours/year] | The areas surrounding zone 0 and 1 or around flange connections. | - Fault-free operation |

Dust

| Ex zones | Covers areas in which a dangerous, potentially explosive atmosphere is ... | We are in general… | Operation without effective ignition source. |
|---|---|---|---|
| **Zone 20** | In the form of a combustible cloud of dust in the air. Present continuously or for lengthy periods. [> 1000 hours/year] | Only inside apparatus, containers (mills, dryers, mixers), piping | - Fault-free operation<br>- Rare operational faults<br>- Frequent operational faults |
| **Zone 21** | In the form of swirls of deposits dust. Present occasionally. [10 - 1000 hours/year] | In surrounding area e.g. by dust removal or at filling stations or areas of dust deposits. | - Fault-free operation for whirled-up dust<br>- Rare operational faults for dust deposits |
| **Zone 22** | Present infrequently and then only for a short time [<10 hours/year] | In areas in which dust may emerge from seals and from deposits. | - Fault-free operation |

The installer or operator of an installation must judge whether there is an explosion hazard within an area, and make the zoning accordingly.

**For ATEX installations, refer to chapter "ATEX (EN 94/9/CE)"**



Professional Milling and Handling of Powders

| | | |
|---|---|---|
| **Type de machine / Maschinentyp / Type of machine:** | | **MF-3** |
| **Appareil de mesure / Messgerät / Measuring unit** | **:** | **TES 1350** |
| **N° de série / Serien Nr. / Serial Nr.** | **:** | **971205674** |
| **Norme / Norm / Standard** | **:** | **dBA (DIN 45635)** |

**Conditions de mesure**
La mesure est faite:
- à 1 m
- à hauteur de la chambre de broyage
- avec l'outillage monté
- avec les accessoires montés
- à vide (sans produit)

**Messbedingungen**
Die Messung wird gemacht:
- bei einer Distanz von 1 m
- auf Mahlkammerhöhe
- mit montiertem Werkzeug
- mit montiertem Ein- und Auslaufzubehör
- Mahlkammer leer (ohne Produkt)

**Measuring conditions**
Measurement is made:
- at a distance of 1 m
- at height of milling chamber
- with installed tools
- with installed inlet and outlet accessories
- Milling chamber empty (without product)

| | | |
|---|---|---|
| **Niveau sonore<br>Geräuschpegel<br>Noise level** | **68.5 dBA** | **Vitesse maxi<br>Geschwindigkeit maxi<br>Speed maxi** |
| | **60.1 dBA** | **Vitesse mini<br>Geschwindigkeit mini<br>Speed mini** |

Professional Milling and Handling of Powders

# Table of contents

**GENERAL** **2**
Description of the unit ..... 2
**PHASES** **3**
Setup ..... 3
Operation ..... 3
Maintenance and cleaning ..... 4
Repairs ..... 5
**MECHANICAL RISK** **6**
Shearing hazard at the infeed ..... 6
Shearing hazard at the discharge ..... 8
Catching, entanglement (rotor) ..... 10
Impact door ..... 11
Crushing hazard of the drive ..... 13
**OTHER RISKS** **14**
Crushing hazard of the unit ..... 14
Materials and products ..... 14
Hazards from operation under pressure ..... 14
Temperatures ..... 16
Electrostatic charge buildup in the powder ..... 16

Professional Milling and Handling of Powders

# General

## Description of the unit

### General information

This machine is designed for the fragmentation of a wide diversity of products in the pharmaceutical, chemical, and food industries.

### Principle components of the unit

- Case and fragmentation system
- Motor and electric components
- Stand or frame
- Infeed funnel
- Discharge funnel

### Diagram

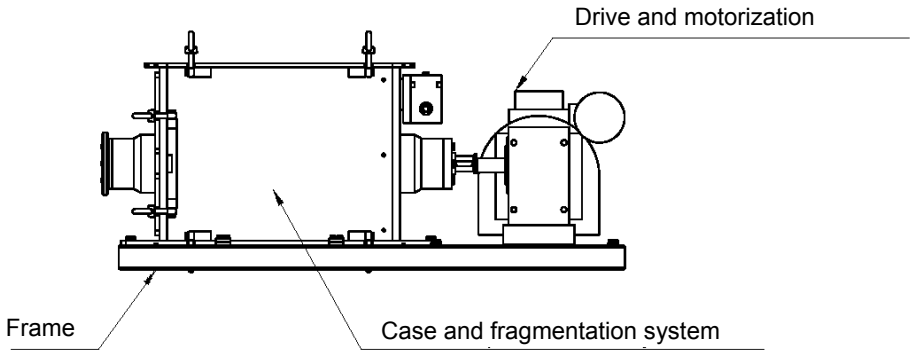


Professional Milling and Handling of Powders

# Phases

## Setup

### Personnel qualification

Licensed mechanic or electrician.

### Restrictions

The customer must familiarize himself with the service manual prior to setup.

## Operation

### Personnel qualification

None

### Special requirements

- Thorough knowledge of user manual
- Thorough knowledge of the safety rules

### Restrictions

None

Professional Milling and Handling of Powders

# Maintenance and cleaning

Improper maintenance of the unit is a contributing factor to accidents such as in-service rupture or danger of electrocution.
The safety regulations in effect in the country where the unit is installed must be followed when performing maintenance tasks.

## Prohibited

For personnel who have not received minimum instruction on the cleaning and maintenance of the unit

## Personnel qualification

None

## Special requirements

- Thorough knowledge of user manual
- Thorough knowledge of the safety rules

## Restrictions

None

## Comments

One must still study the instructions for the new machine even if one has knowledge of the operation of an older Frewitt machine.

Professional Milling and Handling of Powders

# Repairs

## Prohibited

For personnel who are not licensed mechanics and/or electricians.

## Personnel qualification

Licensed mechanic or electrician.

## Special requirements

- Thorough knowledge of user manual
- Ability to read and understand technical diagrams and folders
- Thorough knowledge of the safety rules
- The proper tools for dismantling and assembly.

## Restrictions

The person performing repair work must use the original documentation supplied with the unit and no other.
Only Frewitt parts may be used

## Comments

One must still study the instructions for the new machine even if one has knowledge of the operation of an older Frewitt machine.

Professional Milling and Handling of Powders

# Mechanical risk

## Shearing hazard at the infeed

| Type of hazard(s) : | Description/location : |
|---|---|
| Shearing | Infeed of the unit |

**Definition of the hazards:**

1.2 Introduction of one's hand via the infeed funnel into the unit while it is running poses a shearing hazard. There is a danger of one's hand being pinched between the screen (support) and the rotor.

Diagram

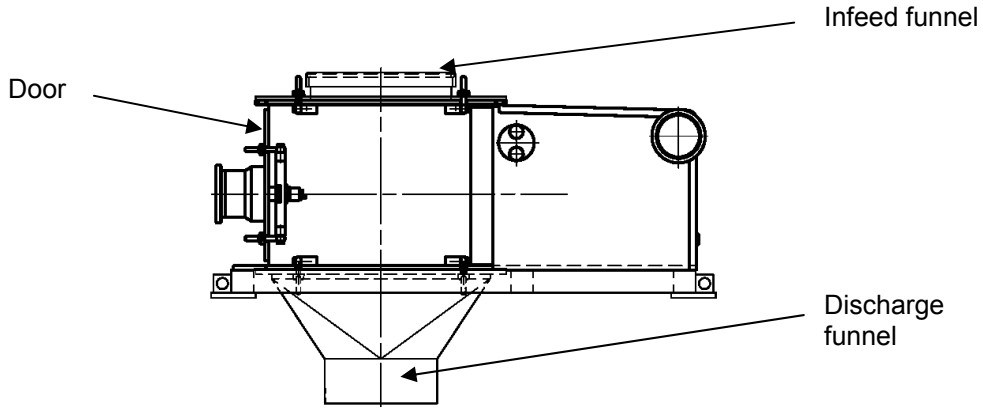


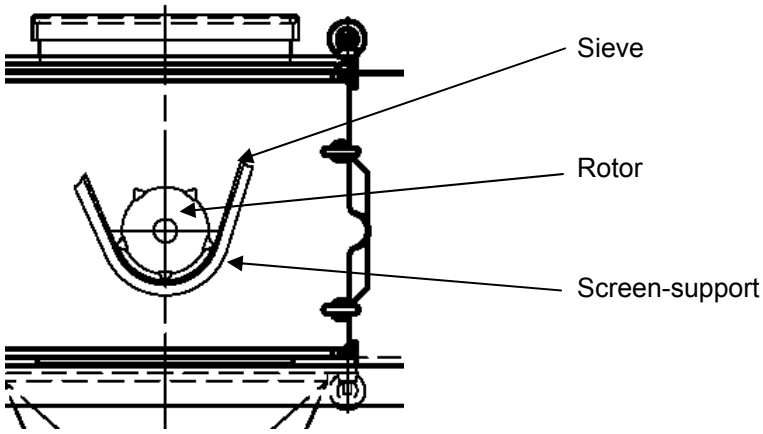


**Precautions:**

In-Line Machine:
When integrating the machine in the final in-line installation, the user must make sure that adequate safety systems are in place to prevent the introduction of limbs into the fragmentation zone via the infeed of the machine.

Professional Milling and Handling of Powders

# Shearing hazard at the discharge

| Type of hazard(s) : | Description/location : |
|---|---|
| Shearing | Discharge of the unit |

**Definition of the hazards :**

1.4 Introduction of one's hand via the discharge funnel into the unit while it is running poses a shearing hazard. There is a danger of one's hand being sheared between the support and the rotor when the screen is not installed.

Diagram

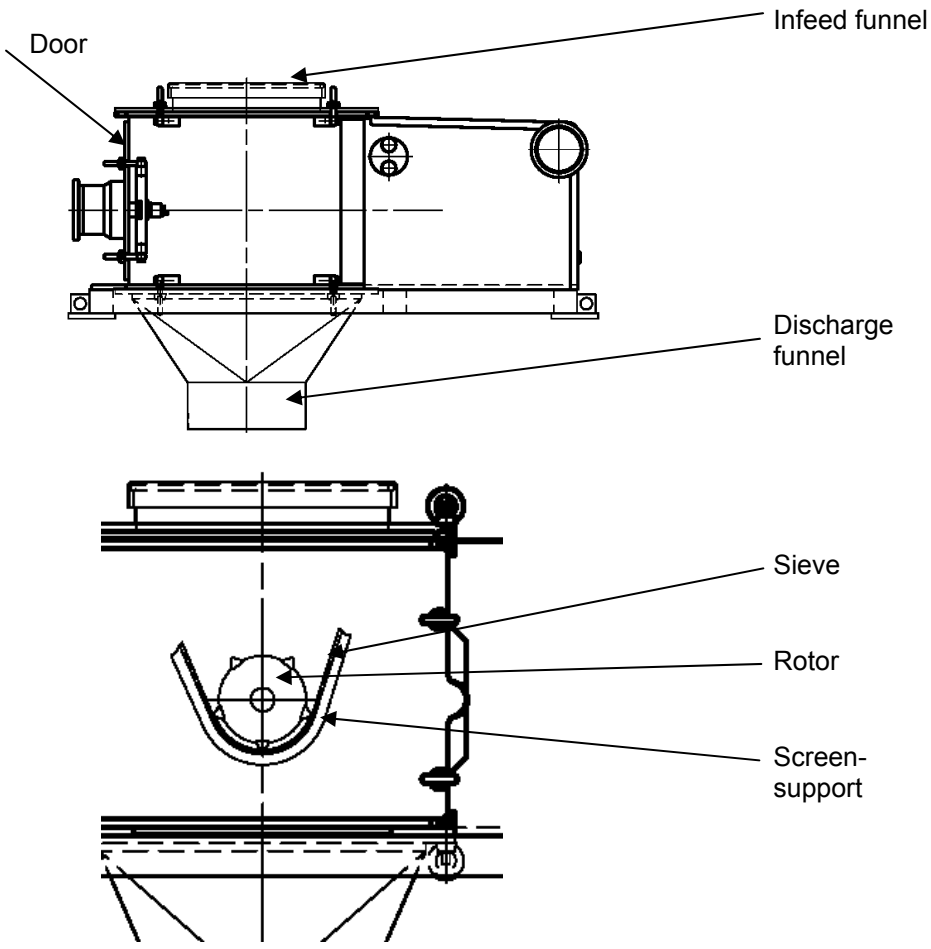


**Precautions:**

"Stand alone" Machine:

Under no circumstances must the machine be started without the sieve if the rotor is installed. There is a shearing, cutting, or severing hazard to upper limbs introduced via the discharge into the fragmentation system when the system is running without the sieve and with the rotor installed in the machine.

In-Line Machine:

When integrating the machine in the final in-line installation, the user must make sure that adequate safety systems are in place to prevent the introduction of limbs into the fragmentation zone via the infeed of the machine.



Professional Milling and Handling of Powders

# Catching, entanglement (rotor)

| | |
|---|---|
| **Hazards :**<br>Mechanical hazards | **Hazard zone :**<br>Case and fragmentation system |

**Definition of the hazards:**

1.4Catching, entanglement hazard

There is a catching or entanglement hazard posed by the rotor if hair or clothing is introduced into the fragmentation system.

Diagram

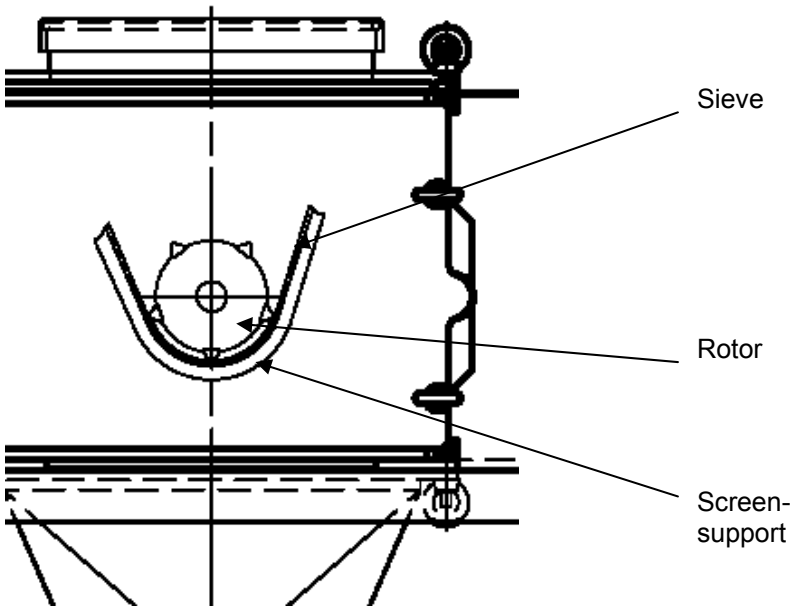


**Precautions:**

In order to avoid all risks of catching or entanglement, the users of the unit must not wear clothing that is too loose. Long hair should be tied back or restrained by some suitable means (hair net, rubber band, etc.).

Professional Milling and Handling of Powders

# Impact door

| Type of hazard(s) : | Description/location : |
|---|---|
| Impact | door |

**Definition of the hazards:**

1.6 Opening the door with the unit still running (or just after it has been stopped) poses a hazard to the operator because the rotor does not stop immediately.

Diagram

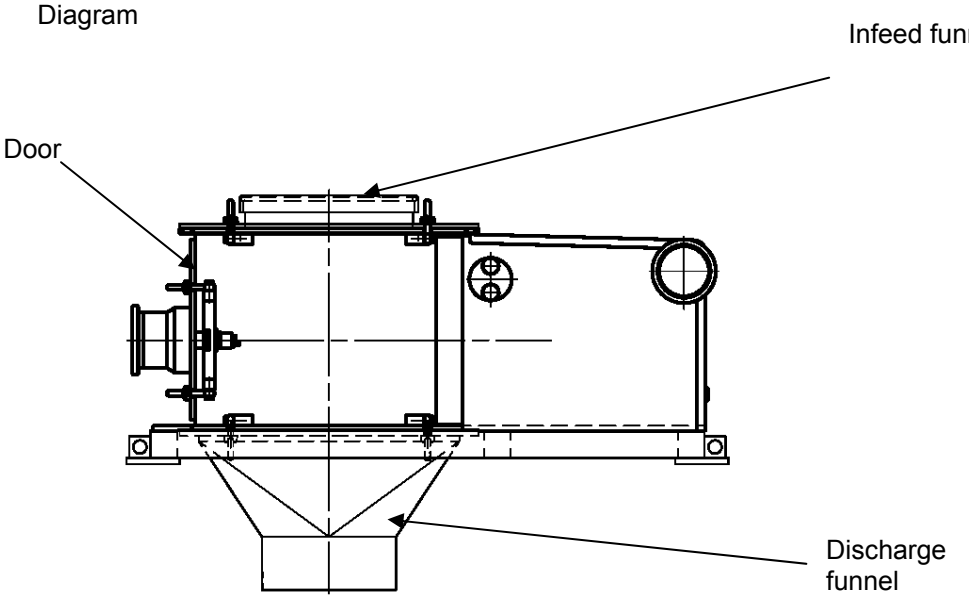


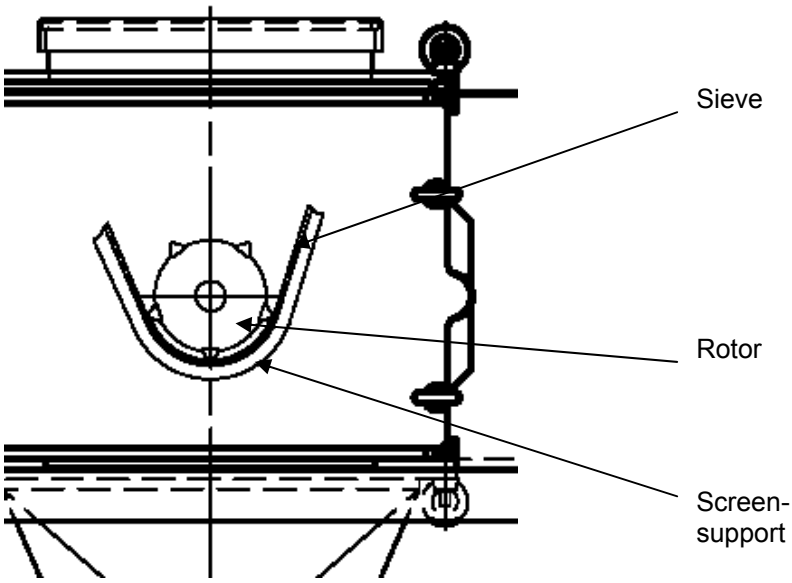


**Precautions:**

Do not open the door during the operation of the machine



Professional Milling and Handling of Powders

# Crushing hazard of the drive

| Type of hazard(s) : | Description/location : |
|---|---|
| Crushing hazard | Infeed of the unit |

**Definition of the hazards:**

1.2 Running the unit without the drive protective cover in place poses a crushing hazard between the drive components.

Diagram

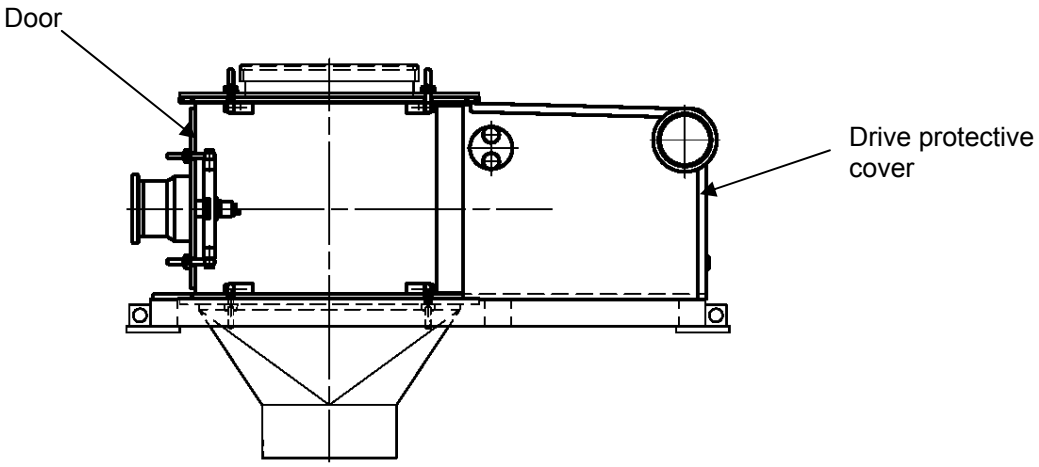


**Precautions:**

Do not start the machine if the protective cover is not mounted.

Professional Milling and Handling of Powders

# Other risks

## Crushing hazard of the unit

| | |
|---|---|
| **Hazards :**<br>Crushing hazard | **Hazard zone :**<br>Machine |

**Definition of the hazards:**

Crushing hazard if the unit tips.

**Precautions:**

If the unit has casters, they must be removed and the unit must always be fastened to a pallet for transport.

## Materials and products

| | |
|---|---|
| **Hazards :**<br>Risks posed by the materials and products | **Hazard zone :**<br>Case and fragmentation system |

**Definition of the hazards:**

Risks posed by the materials and products
The manufacturer is not familiar with every potential product used in the units. The user of the unit is therefore responsible for the protection of the unit and personnel from damages caused by the products being processed.

**Precautions:**

The user of the unit is responsible for the protection of the unit and personnel from damages caused by the products being processed.

## Hazards from operation under pressure

| | |
|---|---|
| **Hazards :**<br>Ejection of fluid under pressure | **Hazard zone :**<br>Unit |

**Definition of the hazards:**

Risks of fluid ejection caused by pressurization of the unit.

**Precautions:**

It is prohibited to operate the unit under a pressure greater than the value indicated on the unit (CE label).
Personnel must remain at least three meters away from the unit during pressurization.

Professional Milling and Handling of Powders

## Temperatures

| Hazards : | Hazard zone : |
|---|---|
| burn | Installation, infeed plate, discharge funnel |

**Definition of the hazards:**

Burn hazard to personnel coming in contact with the case of the unit, the door, the infeed plate, or the discharge funnel.
The sides of the unit may become very hot when it is pressurized with steam.

**Precautions:**

Do not touch the unit during pressurization.
Wait an hour before touching the unit after depressurization, or use appropriate burn protection means.

## Electrostatic charge buildup in the powder

| Type of hazard(s) : | Description/location : |
|---|---|
| | electrostatic charge buildup in the powder |

**Definition of the hazards:**

When the unit is running, there is a risk of an electrostatic charge building up in the powder. The explosion hazard is proportional to the speed of the rotor.

When moving the unit, there is a risk of an electrostatic charge building up in the powder. The explosion hazard is proportional to how fast the unit is moved.

**Precautions:**

This user manual refers only to the functioning and operation of the unit. The specific hazards resulting from the products to be processed are not covered in this user manual and must be dealt with separately. The person in charge of the unit must clearly state in his own instructions for use the hazards inherent to the products to be processed, as well as the safety instructions specific to them. Personnel operating the unit must follow these instructions to the letter.

Professional Milling and Handling of Powders

# START-UP

Professional Milling and Handling of Powders

Pour garantir la sécurité de l'opérateur et l'état de l'installation lors des opérations de transport et de manutention le personnel doit:

- Avoir des connaissances techniques suffisantes dans le domaine de l'emballage et de la manutention.
- Avoir des connaissances détaillées des prescriptions de sécurité
- Utiliser des moyens de transport et engins de levage supportants la masse de l'installation

La masse de l'installation se trouve dans le chapitre 2- Bulletin de livraison

Um die Sicherheit des Bedieners und die der Anlage zu gewährleisten, muss für den Transport und die Wartung das Personal:

- Genügend technische Kenntnisse haben im Bereich der Verpackung und Wartung.
- Die Sicherheitsvorschriften bis in die Einzelheiten genau kennen.
- Transportmittel und Hebezeuge verwenden, welche für das Gesamtgewicht der Anlage ausgelegt sind.

Gesamtgewicht der Anlage findet sich im Kapitel 2 - Lieferschein

To ensure the safety of operators and the status of the installation during transport and handling operation the staff should:

- Have enough technical know-how as regards packing and handling.
- Have a detailed knowledge of safety prescriptions
- Use transport and lifting gear for supporting installation's mass.

Installation's mass is in Chapter 2-Delivery bulletin

**Pour les installations sans socle:**

- Démonter l'accessoire d'entrée (A) selon chapitre 5- Démontage des accessoires entrée-sortie s'il est monté.
- Ouvrir la protection entraînement (B).
- Dévisser les vis de fixation (C) de l'installation sur la palette.
- Manutentionner l'installation selon l'image suivante avec un engin de levage adéquat.
- Fermer la protection entraînement (B).
- Monter l'accessoire d'entrée (A) selon chapitre 5- Montage des accessoires entrée-sortie.

**Für die Anlagen ohne Sockel :**

Aufsatz zum Einlauf (A) abnehmen, nach Kapitel 5, Aufsatz für Einlauf/Auslauf abnehmen, sofern notwendig.Schutzabdeckung des Antriebs (B) öffnen
Montageschrauben der Palette (C) lösen
Heben der Anlage gemäss Zeichnung mit einem dafür konzipierten Hebezeug
Schutzabdeckung des Antriebs (B) befestigen
Aufsatz zum Einlauf (A) befestigen gemäss Kapitel 5 – Befestigung der Aufsätze Einlauf/Auslauf.

**For installations without a base:**

- Disassemble intake attachment part (A) according to Chapter 5- Intake-Outlet attachment parts, disassembling if assembled.
- To open drive protection (B).
- Unscrew the fastening screws (C) of the installation on the pallets.
- Handle the installation according to the next image with an appropriate lifting gear.
- Close the drive protection (B).
- Assemble the intake attachment part (A) according to Chapter 5-Assembly of Intake-Outlet attachment parts.

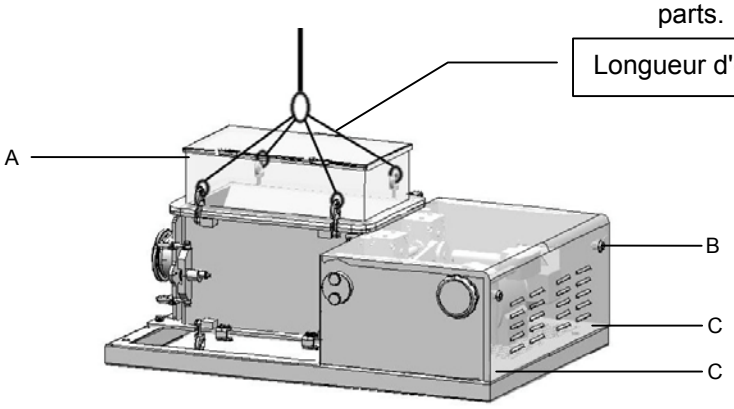




Professional Milling and Handling of Powders

## Pour les installations avec socle:

- Démonter l'accessoire d'entrée (A) selon chapitre 5- Démontage des accessoires entrée-sortie seulement si besoin.
- Dévisser les vis de fixations (B) du socle sur les éléments de centrage de la palette.
- Manutentionner l'installation selon l'image suivante avec un engin de levage adéquat.
- Monter les roulettes (C).
- Visser les vis de fixation (B).
- Monter l'accessoire d'entrée (A) selon chapitre 5- Montage des accessoires entrée-sortie seulement si besoin.

STOP

Pour le transport, si l'installation a des roulettes, elles doivent être démontées et l'installation doit être fixée dans tous les cas sur une palette.

## Für die Anlagen mit Sockel :

- Aufsatz zum Einlauf (A) abnehmen, nach Kapitel 5, Aufsatz Einlauf/Auslauf abnehmen, sofern notwendig.
- Montageschrauben (B) des Sockels lösen, welche sich auf den Zentrierelementen der Palette befinden.
- Heben der Anlage gemäss Zeichnung mit einem dafür konzipierten Hebezeug.
- Rollen (C) befestigen.
- Befestigungsschrauben (B) anziehen.
- Aufsatz zum Einlauf (A) befestigen gemäss Kapitel 5 – Befestigung der Aufsätze Einlauf / Auslauf, sofern notwendig.

STOP

Wenn die Anlage mit Rollen versehen ist, müssen diese für den Transport abgenommen, und die Anlage in jedem Fall auf der Palette befestigt werden.

## For installations with a base:

- Disassemble intake attachment part (A) according to Chapter 5- Intake-Outlet attachment parts, disassembling only if necessary.
- Unscrew the fastening screws (B) of the base on the centering elements of the pallet.
- Handle the installation according to the next image with appropriate lifting gear.
- Assemble the casters (C).
- Unscrew the fastening screws (B).
- Assemble intake attachment part (A) according to Chapter 5- Assembly Intake-Outlet attachment parts if necessary.
-

STOP

Regarding transport, if the installation has casters, they should be disassembled and installation should in any case be fastened on a pallet.

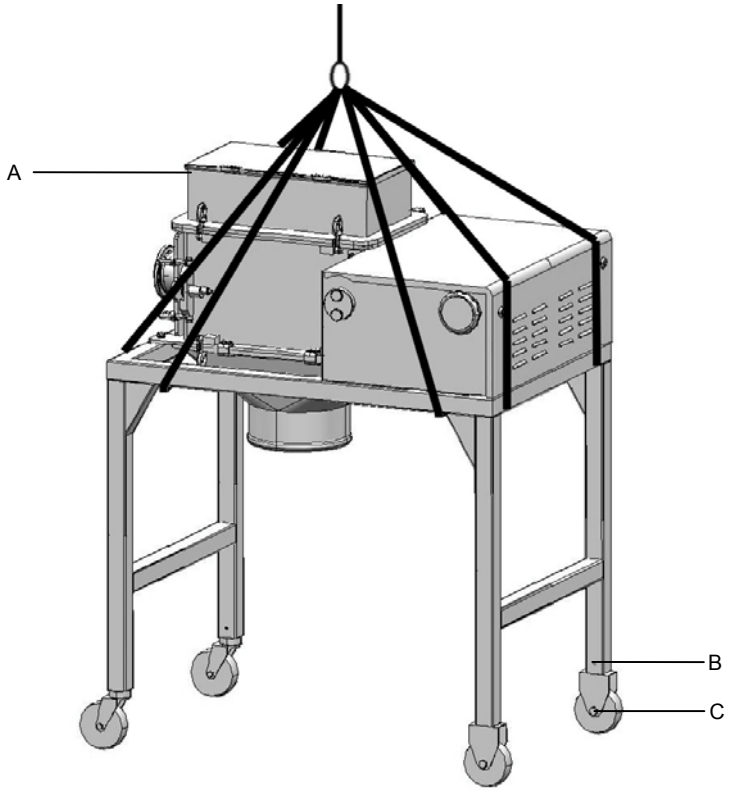


Professional Milling and Handling of Powders

Avant la première mise en service, vérifiez les points suivants:

- Contrôler visuellement l'état de l'installation.
- Contrôler la fixation de l'installation. (peut varier selon l'exécution de l'installation)
- Contrôler le branchement électrique et pneumatique.
- Contrôler la mise à terre si nécessaire.
- Si l'outillage est monté, contrôler que celui-ci est monté correctement selon chapitre 5.
- Si les accessoires sont montés, contrôler que ceux-ci sont montés correctement selon chapitre 5.

Prüfen Sie folgende Punkte vor der ersten Inbetriebnahme:

- Den Zustand der Anlage optisch kontrollieren
- Die Befestigung der Anlage kontrollieren. (Kann je nach Ausführung ändern)
- Kontrolle des elektrischen und pneumatischen Anschlusses.
- Die Erdung kontrollieren, sofern notwendig.
- Sofern die Werkzeuge montiert sind, kontrollieren, ob diese korrekt montiert sind, gemäss Kapitel 5.
- Wenn die Aufsätze montiert sind, kontrollieren, ob diese korrekt montiert sind, gemäss Kapitel 5.

Before first start-up, check the following points:

- Visually control of the installation status.
- Control installation fastening. (May vary according installation's execution)
- Control electric and pneumatic connections.
- Control the grounding if necessary.
- If tools are assembled, control that these are properly assembled according to Chapter 5.
- If accessories are assembled, control that these are properly assembled according to Chapter 5.

Professional Milling and Handling of Powders

| | | |
|---|---|---|
| Lors du branchement de l'installation au réseau électrique, contrôlez la tension qui doit correspondre à celle indiquée sur la plaquette signalétique. | Beim Anschluss der Anlage an das Stromnetz ist die Spannung zu überprüfen. Sie muss mit den Angaben des Typenschildes der Maschine übereinstimmen. | Check voltage before the installation is connected to the electric network. the voltage must be identical to the indication shown on the type plate. |
| Si le convertisseur de fréquences n'est pas fourni par Frewitt, se référer à la plaquette signalétique du moteur pour le paramétrer | Wenn der Frequenzumrichter nicht von Frewitt geliefert wird, verweisen wir für seine Parametrisierung auf das Typenschild des Motors | If the frequency converter was not supplied by Frewitt, consult the plate on the motor to set it |
| Le sens de rotation de l'entraînement doit correspondre à la flèche se trouvant sur le bâti. | Die Drehrichtung muss mit dem Pfeil auf dem Gehäuse übereinstimmen. | The direction of rotation of the rotor motion has to correspond to the arrow shown on the housing. |
| Votre installation est prévue pour | Ihre Installation ist mit… | Your installation is to supply with |

## 400V 50Hz / 3LPE

… zu speisen

| | | |
|---|---|---|
| Si les installations équipées d'un variateur de fréquence sont branchées sur un réseau électrique équipé d'un disjoncteur différentiel à courant de défaut, celui-ci doit être adapté (>30mA). | Wenn die Anlagen, die mit einem Frequenzumformer ausgestattet wurden, auf einem Stromversorgungsnetz angeschlossen werden, das mit einem Fehlerstromschutzschalter ausgestattet wurde, muß dieser angepaßt werden (>30mA). | If the installations equipped with a frequency converter are connected to an electrical network including a residual current circuit-breaker, this one must be adapted (>30mA). |
| L'installation ne peut en aucun cas être branchée directement au réseau électrique. L'utilisation d'un appareil de limitation de courant au démarrage est nécessaire comme par exemple un démarreur progressif. | Die Anlage darf in keinem Fall direkt an das Stromnetz angeschlossen werden. Eine Anlaufstrombegrenzung, zum Beispiel ein Stufenanlasser, ist erforderlich. | Under no circumstances may the installation be plugged directly into the mains power supply. An inrush current limitation device is required, such as a progressive starter. |
| Le courant de démarrage doit être limité à max. 160 % du courant nominal. | Der Anlaufstrom ist auf max. 160 % des Nominalstromes zu begrenzen. | The starting current must be limited to max. 160 % of the nominal current. |

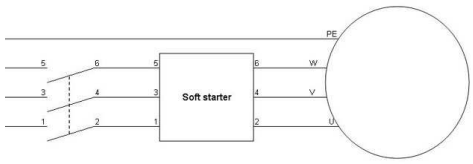


| | | |
|---|---|---|
| Raccorder l'air ou l'azote. Afin d'assurer un bon fonctionnement des joints Garlock, la pression minimum requise pour l'inertage est de | Luft oder $N_2$ anschliessen. Um ein gutes funktionieren der Garlock Dichtungen zu gewährleisten, ist der erforderliche Mindestdruck für die Lager-begasung | Connect the air or $N_2$. This is a must in order not to damage the Garlock bearing lip seals. Use a minimum of |

## ~ 3 barg

# OPERATING INSTRUCTIONS

## Tools disassembly

STOP

Before each intervention, installation should be stopped and electric and pneumatic supplies disconnected. Contamination risks due to product should be averted by the user

- Increase the distance rotor / sieve (A)
- Remove door's lock
- Open the door
- Draw the rotor (B) towards the outer part of the housing avoiding contact with the sieves taking care not to damage it

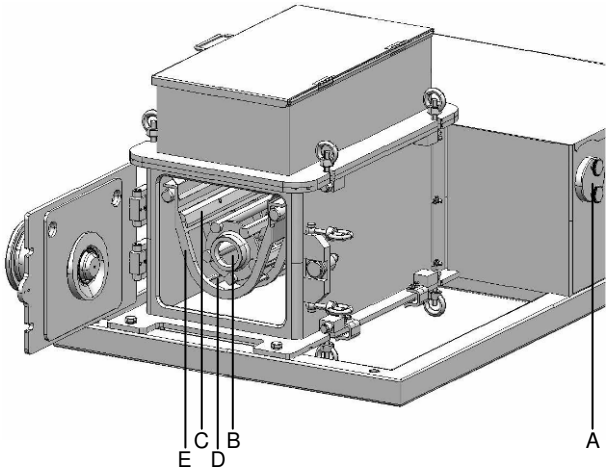


**Rigid screen-support option**

- Dismount sieve holder(C)
- Draw the sieves (D) towards the outer part of the housing
- Draw screen-support (E) towards the outer part of the housing

**Option sieve for direct tensioning**

- Increase the distance between rotor / sieve (A) until the sieve is released
- Draw the sieve (D) towards the outer part of the housing

## Change of tensioning elements

STOP

Before each intervention, installation should be stopped and electric and pneumatic supplies disconnected. Contamination risks due to product should be averted by the user

- Disassemble tools
- Clean installation and accessories
- Open drive protective cover (F)
- Unscrew the screws on the gear box of the tensioning elements (G)
- Draw the tensioning elements' axis outside (H)

In order of not to damage the lip seals, it is imperative to draw on the tensioning elements' axis carefully with caution.

- Lubricate slightly according to chapter 7-Table of lubrication, at the level of the tensioning elements' axis corresponding to your type of sieves
- Assembly the tensioning elements' axis (H)

Control the presence of the key on the tensioning elements' axis.
In order to keep the lip seals safe, it is imperative to assemble the tensioning elements' axis softly and carefully.

- Screw the screws on the gear boxes of the tensioning elements (G)
- Close the drive protective cover (F)
- Reassemble the corresponding tools

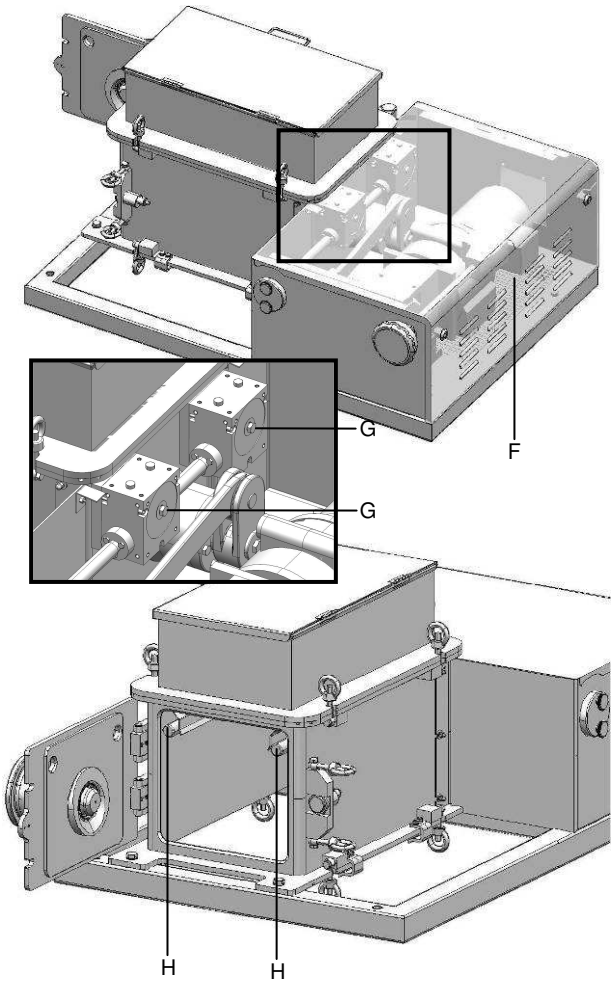




Professional Milling and Handling of Powders

## Tools Assembly

STOP

Before each intervention, installation should be stopped and electric and pneumatic supplies disconnected. Contamination risks due to product should be averted by the user

- Ensure that the tensioning elements matching the sieve are assembled. If this isn't the case, change tensioning elements
- Increase the distance rotor / sieve (A)

**Screen-support option (according to Chapter 9-Type of Sieve)**

- Slip the screen-support (E) on the tensioning elements' axis inside the housing in the direction according to detail
- Slip the sieve (D) on the screen-support (E)
- Place the sieve holder on the screen-support (C)

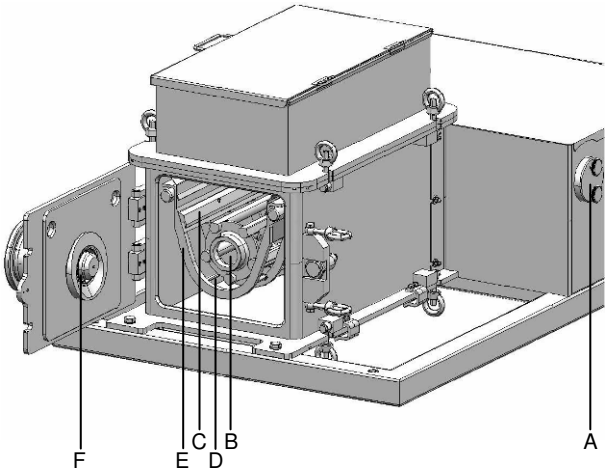


**Sieve for direct tensioning option (according to Chapter 9-Type of Sieve)**

- Slip the sieve (D) in the slits of tensioning elements' axis
- Assemble the rotor (For the mills MF-8, please pay attention to a correct fitting of the positioning pin on the rear bearing head)
- Control the presence and status of the door's seal
- Close the door (for installations with mobile bearing (F) with pentagon drive shaft, lead the pentagon adequately in order to be able to close the door) if, the door doesn't close, then adjust distance rotor / sieve (A) in order to place the rotor in front of the mobile bearing (F)
- Tighten door's lock

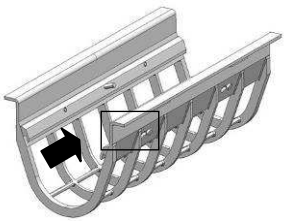

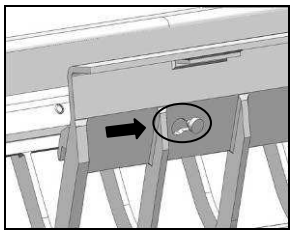

## Adjustment of the screen-support

- Ensure that tools are assembled
- Increase the distance between rotor/sieve (A) to a maximum (the lowest position screen-support / sieve)
- Switch on the installation according to chapter 5-Controls
- Decrease the distance rotor/sieve (A) until a slight noise of friction between rotor and sieve is heard
- Increase the distance between rotor/sieve (A) until next division

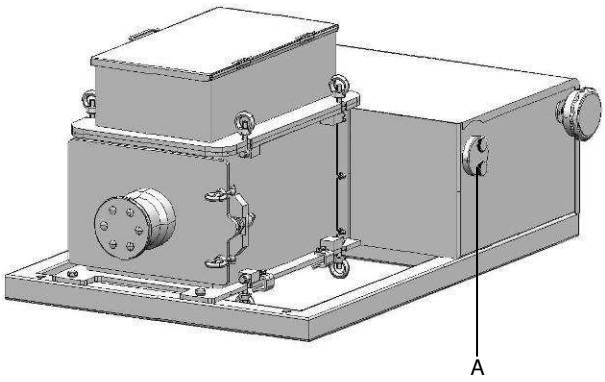


Professional Milling and Handling of Powders

## Adjustment of sieve for direct tensioning

- Be sure that tools are assembled
- Increase the distance rotor/sieve (A) at a maximum (the lowest position of sieve)
- Switch on the installation according to Chapter 5-Controls
- To decrease the distance rotor/sieve (A) until a slight noise of friction between rotor and sieve is heard

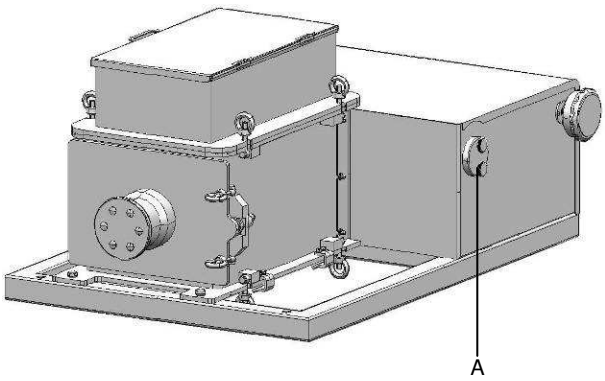


## Disassembly of Inlet and outlet funnels

STOP

Before each intervention, installation should be stopped and electric and pneumatic supplies disconnected. Contamination risks due to product should be averted by the user

- Loosen the ring bolts of funnel to be disassembled
- Remove the funnel (I) of the housing (this may vary according to the execution of the installation)

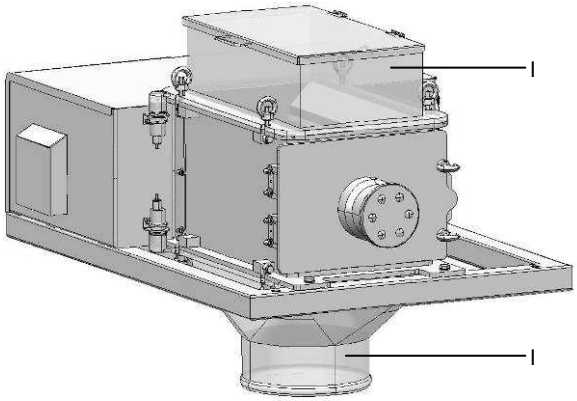


## Assembly of Inlet and outlet funnels

STOP

Before each intervention, installation should be stopped and electric and pneumatic supplies disconnected. Contamination risks due to product should be averted by the user

- Control the presence and status of seals between the housing and the funnel
- In order to assemble an inlet funnel, control the presence of deflectors (J) at the inlet of installation
- Place the funnel (I) to be assembled (it may vary according to the execution of the installation)
- Control the safety (K) being placed opposite to the detector (as option)
- Tighten ring bolts of the funnel to be assembled

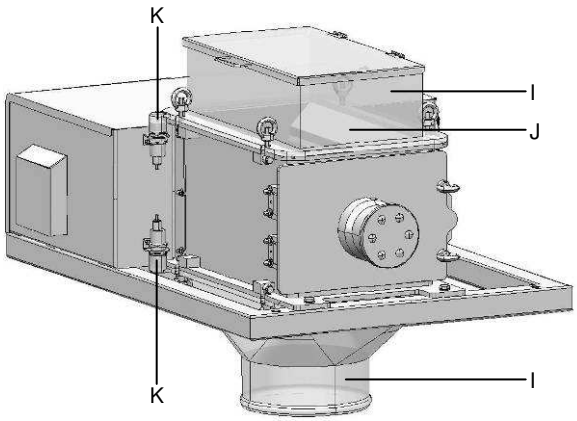




Professional Milling and Handling of Powders

## Controls

### Installation with mechanic variable speed drive

(A) Start
(B) Stop
(C) Emergency Stop
(D) Control lamp of “Power supply OK” (only for machine Not-Eex).
(E) Lamp of control “Safety default” (only for machine Not-Eex).
(F) Motor circuit breaker
(G) Speed control
(H) Adjustment distance rotor/screen-support
(I) Stop / Reset (only for machine Not-Eex with options or machine Eex).

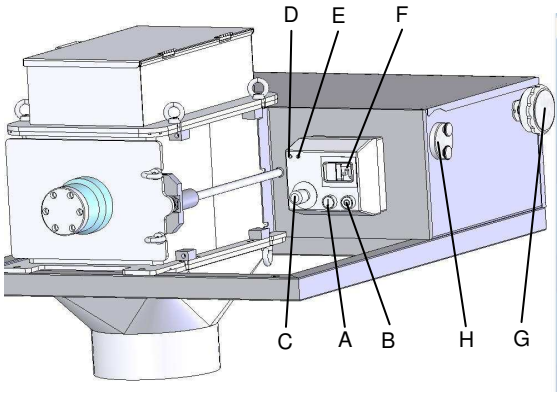


Execution without options

The position, number, type of the control elements, as well as the dimensions and the positioning of the switch box may vary according to installation’s execution.

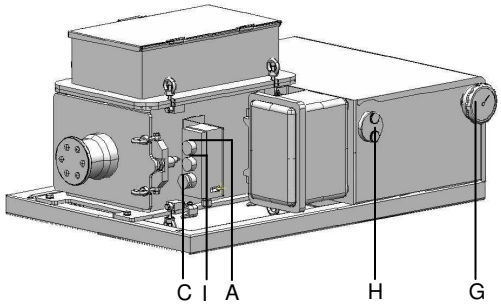


Execution with options

Never start the installation when the drive protective cover is not assembled.
Never open the door during the installation’s operation.
Never start the installation without sieve, and with the rotor assembled

Never turn speed control if installation is not running

### Installation with frequency converter.

(A) Start
(B) Stop / Reset
(C) Emergency Stop
(G) Speed control
(H) Adjustment distance rotor/screen-support
(J) Speed indicator
(K) Switch box

The position, name, type and order of the elements, as well as the dimensions and the positioning of the switch box may vary according to installation’s execution.

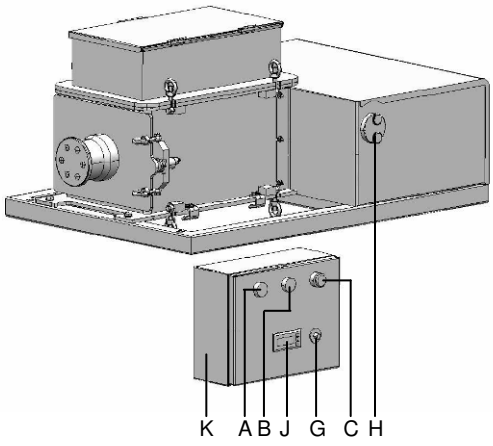


## Information about the process

**ATTENTION : only for MF-6 and MF-8**
For best results, the rotor must always be covered with product. Make sure that the inlet funnel of the specific weight of the product, does not exceed 50 cm from the center of the rotor.

Professional Milling and Handling of Powders

## Bearings purge (as option)

**Option without gas distribution system**
There is no control of gas flow rate. Any additional command on the switch box is not necessary.

Installation should be connected to a gas supply with a 1,2 bar relative pressure.

**Option with gas distribution system**
The gas distribution system is composed of a valve, filter, pressure regulator with manometer and a flow rate detector.

Installation should be connected to a gas supply with a relative pressure of around 5 bar.

**Operation**
- The installation and the air pressure supply start simultaneously.
- The installation and the air pressure supply stop simultaneously.
- The installation will stop if the pressure falls too low.
- The air pressure supply will be cut if there is an emergency stop.

**Use of bearings purge with compressed air as gas.**

Ventilation helps to protect the lip seals against wear and cool the bearings

**Use of bearings purge with nitrogen as gas.**

Ventilation helps to protect the lip seals against wear and cool the bearings.
Ventilation with nitrogen also allows making the sizing chamber inert.

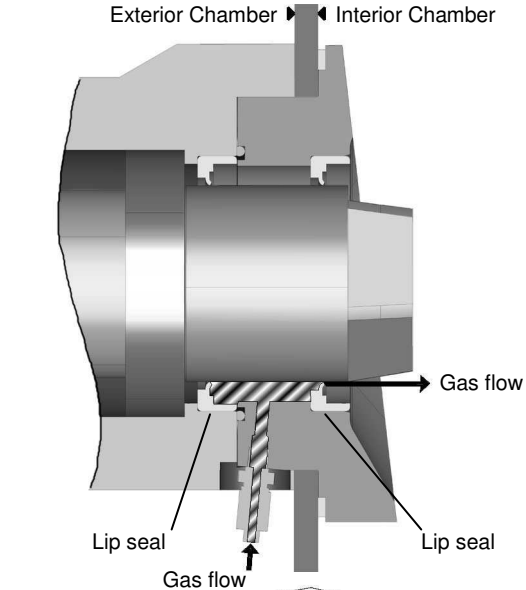


**Control**

For the control of the installations with bearings purge, the additional elements below are present on the switch box:

(G) Switch box
(H) Gas (lamp)

The position and type of the control elements, as well as the dimensions and positioning of the switch box may vary according to installation's execution.

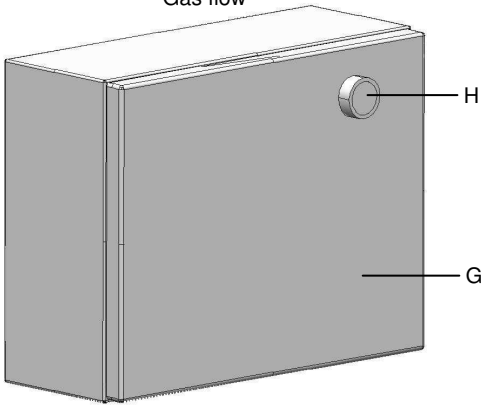




Professional Milling and Handling of Powders

## Inert bearing (as option)

### Use

The inert bearing protects the double-lip seal from wear and tear and cools the bearing. Inerting with nitrogen also ensures an inert milling chamber.

The installation must be connected to a gas supply with a relative pressure of approx. 5 bar.
Nitrogen consumption: 50 - 100 nl/min.

The gas distribution system is composed of a valve, filter, pressure regulator with manometer and a pressure switch.

### Operation

- Delayed start-up of the installation after the inerting process begins.
- The installation and the inerting process stop simultaneously.
- The installation will stop if the pressure falls too low.
- Inerting will cease if there is an emergency stop.

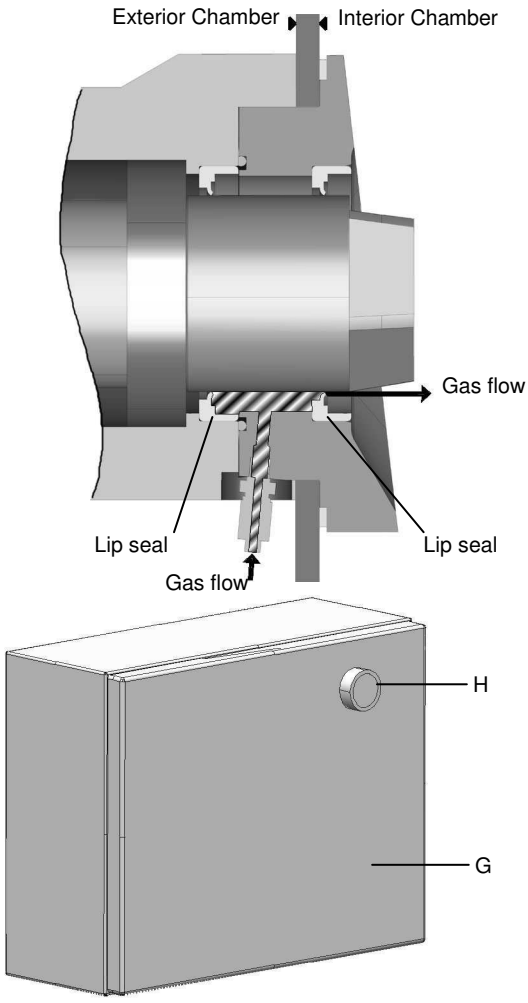


### Controls

For the control of the installations with bearings purge, the additional elements below are present on the switch box:

(G) Switch box
(H) Gas (lamp)

The position, number and type of control elements, as well as the dimensions and positioning of the control cabinet, may vary depending on the installation design.

Professional Milling and Handling of Powders

## Bearing with seal tightness monitoring (as option)

### Use

The bearing with seal tightness monitoring monitors wear and tear in the double-lip seal and stops the installation as soon as airflow is detected.

The installation must be connected to a gas supply with a relative pressure of approx. 5 bar.

The gas distribution system is composed of a valve, filter, pressure regulator with manometer, pressure switch and a flow detector.

### Operation

- Simultaneous start-up of the installation and the air pressure supply.
- The installation and the air pressure supply stop simultaneously.
- The installation stops if airflow is detected (defective bearing seal).
- Air pressure supply is cut if there is an emergency stop.

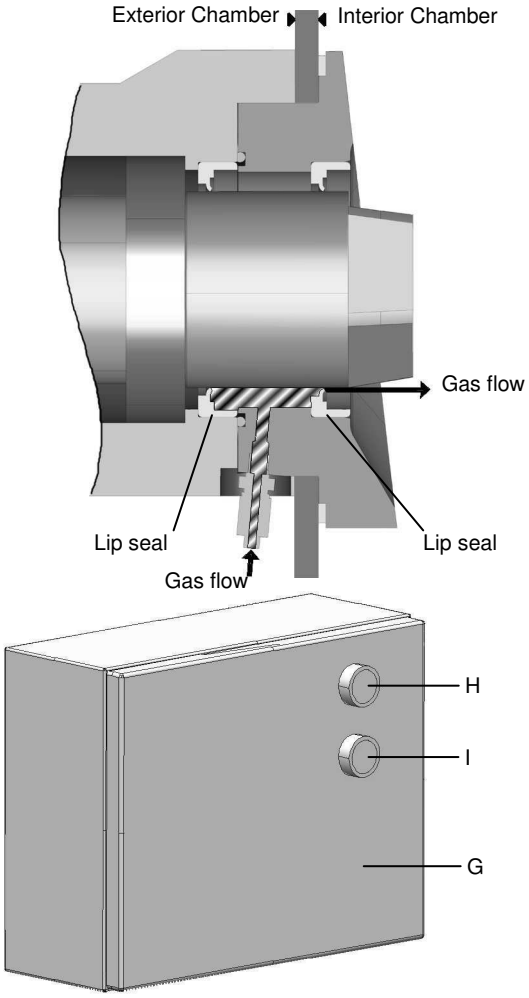


### Controls

For the control of the installations with bearings purge, the additional elements below are present on the switch box:

(G) Switch box
(H) Gas (lamp)
(I) Seal (lamp)

The position, number and type of control elements, as well as the dimensions and positioning of the control cabinet, may vary depending on the installation design.



Professional Milling and Handling of Powders

## Vitesse / Geschwindigkeit / Speed

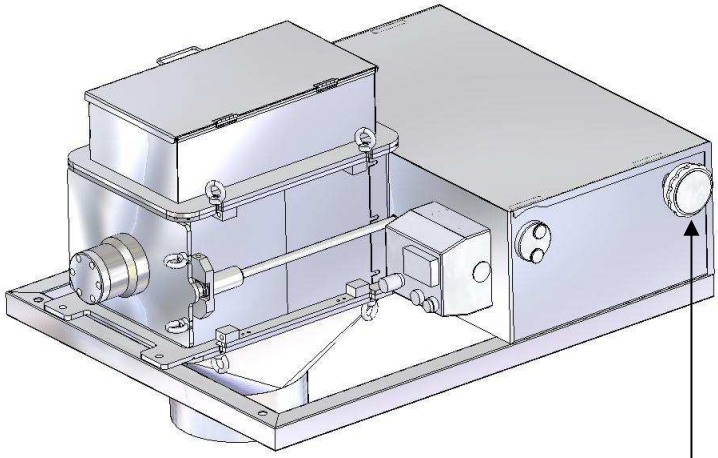

| Position | Oscillation / min<br>Schwingung / min<br>Oscillation / min | Vitesse rotor mm/s<br>Rotorgeschwindigkeit mm<br>Rotor speed mm/s |
|---|---|---|
| 8.5 | 48 | 228 |
| 10 | 64 | 365 |
| 12 | 86 | 498 |
| 14 | 111 | 635 |
| 16 | 138 | 773 |
| 18 | 164 | 905 |
| 20 | 192 | 1043 |
| 22 | 223 | 1175 |
| 24 | 257 | 1313 |

For Non-Eex installations with no optional extras, and with only a starter as a control mechanism (see picture), there is no fault warning system. However, you should check the following:

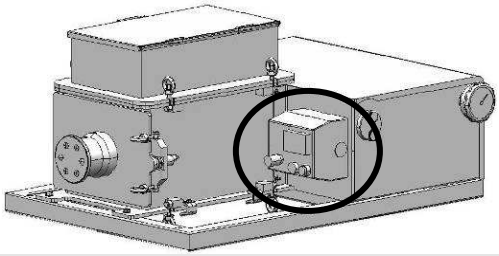

## The installation won't start. (Installation without fault warning system)

- Check that the installation is connected to a power source.
- Check that the motor circuit-breaker is engaged.
- Check that the emergency stop is unlocked.
- If the fault persists, check the points below.

**Checking the safety fittings:**

- Check that all the safety fittings are correctly aligned with the detector. The safety detectors are coded, so be careful to position them properly during assembly.
- If the fault persists, release the motor circuit-breaker.
- Wait 5 seconds.
- Engage the motor circuit-breaker again.
- If the fault persists, contact customer service.

All other installations have a system for detecting faults. A fault is signalled by the "Start" button light flashing.

## The installation will not start and no other light is on. (Installation with fault warning system)

- Check that the installation is connected to a power source.
- Check that the main switch is engaged.
- Check that the emergency stop is unlocked.
- If the fault persists, contact customer service.

## The "Start" button light flashes when pressed. (Installation with fault warning system)

- Press the "Stop/Reset" button to acknowledge the fault.
- If the fault persists, release the main switch.
- Wait 5 seconds.
- Engage the main switch again.
- If the fault persists, press the "Stop/Reset" button again to acknowledge the fault.
- If the fault persists, check the points listed under 'The "Start" button light is flashing'.

## The "Start" button light is flashing (Installation with fault warning system)

**Checking the safety fittings:**

- Check that all the safety fittings are correctly aligned with the detector. The safety detectors are coded, so be careful to position them properly during assembly.
- Press the "Stop/Reset" button to acknowledge the fault.
- If the fault persists, check the points below.

Professional Milling and Handling of Powders

**Checking the gas supply for installations with optional ventilated, inert or monitored bearings.**

- Check that the "Gas" light is not flashing.
- If the "Gas" light is flashing, check that the gas supply is connected.
- Check that the pressure level is adequate as per the instructions in Section 5 - Ventilated bearings, Inert bearing and Monitored bearing.
- If you have an optional "Monitored bearing" and there is a perceptible gas leak, change the bearing gaskets as per Section 7 - Replacing the bearing gaskets.
- Press the "Stop/Reset" button to acknowledge the fault.
- If the fault persists, check the points below.

**Checking the PTC relay**

- Release the main switch.
- Let the installation rest to allow the motor to regain ambient temperature.
- Engage the main switch.
- If the fault persists, check the points below.

**Checking the motor circuit-breaker**

- Release the main switch.

EXPLOSION DANGER
If the installation is in an area where there is a risk of explosion, move the installation to a safe area.

- Open the electrical cabinet and locate the motor circuit-breaker as shown in the diagram in Section 10. Depending on the installation design, the electrical part may be located in an explosion-proof box.
- Re-arm the motor circuit-breaker.

EXPLOSION DANGER
If the installation has an explosion-proof box, please check the presence and the good condition of the seal, clean the surface of the box seal and lubricate it with OSK403 DIN 51 502: KP2E -20 grease or similar before closing.

- Close the electrical cabinet.
- If the fault persists, contact customer service.

**FREWITT SA**
**phone ++41 / 26 460 74 52 (direct)**
**fax ++41 / 26 460 74 01**
**email: customerservice@frewitt.com**

Professional Milling and Handling of Powders

# CLEANING



Professional Milling and Handling of Powders

ECOLAB

*"Cleaning Recommendation"*

*Granules*

*CIP-Cleaning & Disinfection*

## PHARMACOS

| Application / Method: | Typical residues: |
|---|---|
| Milling | Granules |
| **Specific application area:** | **Company: Location: Department** |
| Solid production | **Frewitt SA 1763 Granges Paccot** |

Cleaning interval: After each production batch

| Cleaning Procedure & Chemicals | % | °C | min. | Notes |
|---|---|---|---|---|
| **Pre-cleaning** water | - | - | - | Pre-cleaning either with water or steam depending on the solubility or melting point of residue<br>Demineralized water improves the removal of $TiO_2$-residues |
| **Alkaline Cleaning** **P3-cosa® CIP 95** | 2.0 | 80 | 20 | |
| **Intermediate Rinse** water | - | - | - | Rinse until pH- neutral |
| **Acid Cleaning** **P3-cosa® CIP 72** | 1.5 | 60 | 20 | We recommend P3-cosa CIP 77 in case of Iron oxide residues<br>(10% P3-cosa CIP 77 // 85°C // 20 min) |
| **Intermediate Rinse** water | - | - | - | |
| **Final Rinse** water | - | - | - | Until quality assurance accepted level |

Remark:

USA:
Use P3-cosa CIP 95NA instead of P3-cosa CIP 95

© 05/2004 Ecolab GmbH
For any more assistance, do not hesitate to contact your responsible Ecolab service.
Ecolab Technical Pharmacos Support: +49 211 9893729

**Important additional remarks!**
Due to the diversity of materials and applications the information given below represents only a non binding guideline and is not intended to supersede the manufacturers specifications, limitations and recommendations. It is compulsory to follow the manufacturers limitations, especially concerning pH and temperature stability of the materials. The cleaning process should be individually optimised.

FREWITT DryMilling Division

ECOLAB

*"Cleaning Recommendation"*

*Manual cleaning*

*CIP-Cleaning & Disinfection*

## PHARMACOS

| Application / Method: | Typical residues: |
|---|---|
| Small equipment | All kind of residues |
| **Specific application area:** | **Company:** / **Location:** / **Department** |
| Manual cleaning | **Frewitt SA** / **1763 Granges Paccot** |

Cleaning interval: After each production batch

| Cleaning Procedure & Chemicals | % | °C | min. | Notes |
|---|---|---|---|---|
| **Pre Rinse** water | - | - | - | |
| **Neutral cleaning** **P3-cosa® FOAM 40** | 1.0 | ≥ 45 | | |
| **Final Rinse** water | - | cold | - | Until quality assurance accepted level |

© 05/2004 Ecolab GmbH
For any more assistance, do not hesitate to contact your responsible Ecolab service.

**Important additional remarks!**
Due to the diversity of materials and applications the information given below represents only a non binding guideline and is not intended to supersede the manufacturers specifications, limitations and recommendations. It is compulsory to follow the manufacturers limitations, especially concerning pH and temperature stability of the materials. The cleaning process should be individually optimised.

## Explanation of the symbols

High pressure water jet
> 4 bar

Minimum cleaning distance
50 cm

Low pressure water jet
≤ 4 bar

Minimum cleaning distance
50 cm

Compressed air

## Cleaning the unit

- Start the unit (optional)
- Wash the inside of the case through the infeed accessory
- Turn the unit off (optional)

or

- Fill the case with water
- Start the unit and let it run for a few minutes
- Turn the unit off
- Drain the water from the case

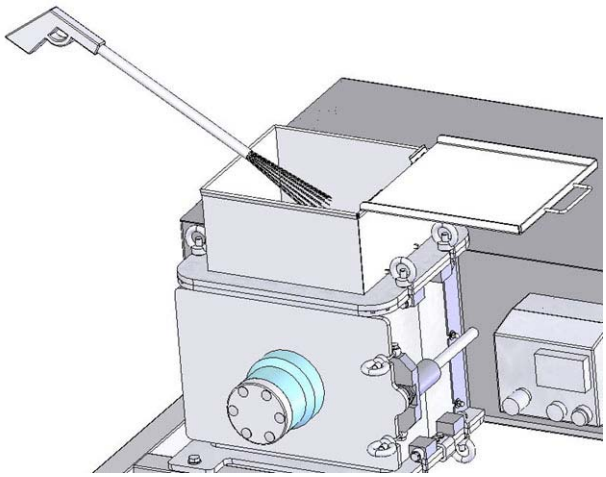

Before performing any work on it, the unit must be turned off and disconnected from the electric and pneumatic power supplies.
The operator is responsible for avoiding risks of contamination by the product.

For units equipped with an electric plug

- The plug must be protected from humidity during the entire cleaning operation.

- Remove the tool according to the instructions in Chapter 5 – Removing the tool
- Clean the infeed accessory
- Clean the inside of the case

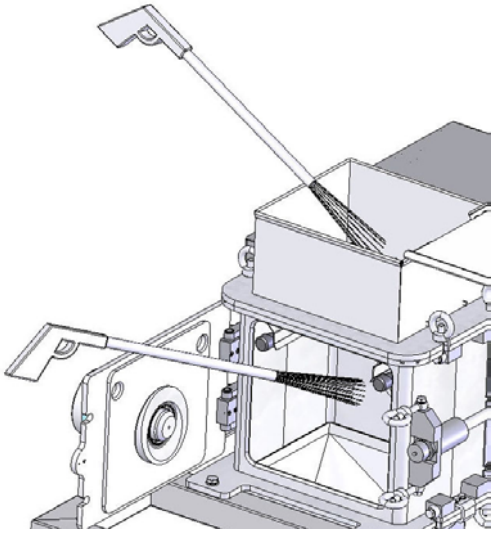

- Do not use sharp or pointed tools. They might damage certain parts of the unit.

- Do not clean the bearing seals with a high pressure water jet

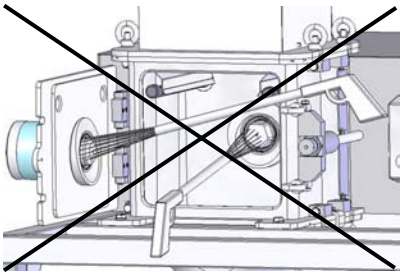

These seals can be cleaned:

- With a low pressure water jet
  or
- With a wet cloth

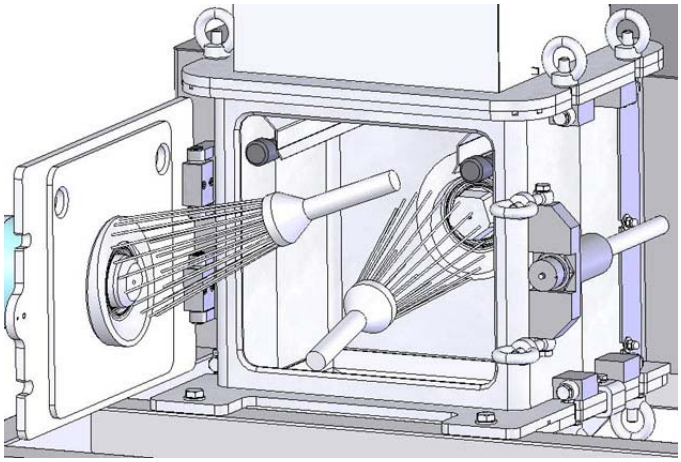

- Do not clean the electrical components with a high pressure water jet. Water may penetrate and damage the electrical components.

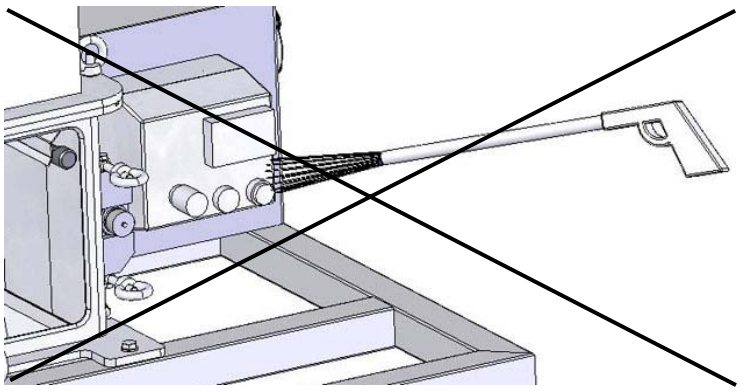

Professional Milling and Handling of Powders

The outside of the unit can be cleaned:

- With a low pressure water jet
  or
- With a wet or dry cloth

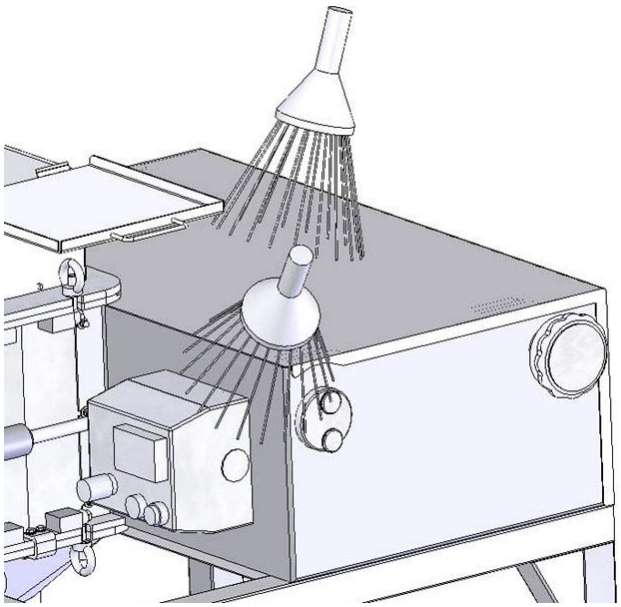

- Remove the hood

The inside of the unit can be cleaned:

- With a low pressure water jet
  or
- With a wet or dry cloth

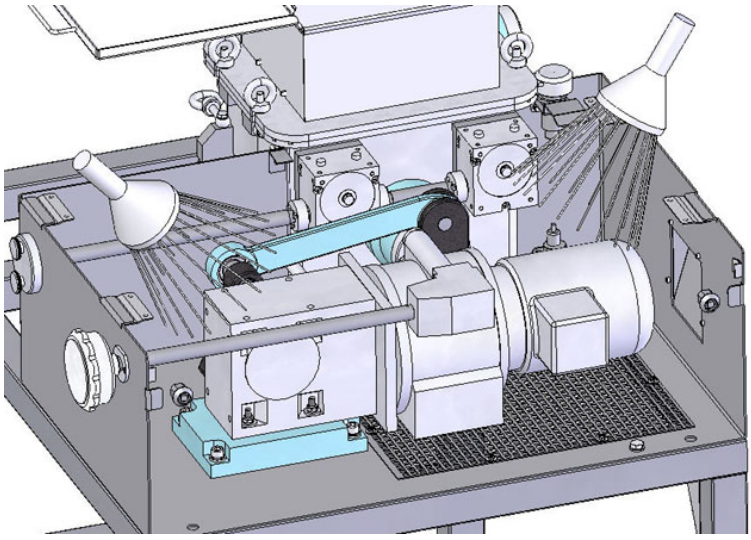

The base can be cleaned:

- With a high pressure water jet
  or
- With a low pressure water jet
  or
- With a wet or dry cloth

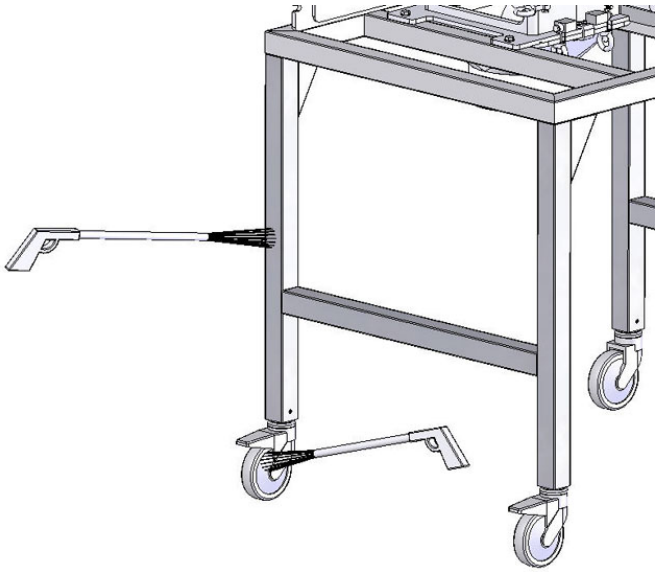

## Drying the unit

The unit can be dried:

- By letting it air dry
  or
- With a cloth
  or
- In an environment heated to 60°C maximum.

- Do not dry the seals with compressed air. Doing so may damage them.
- Dry the seals with a cloth

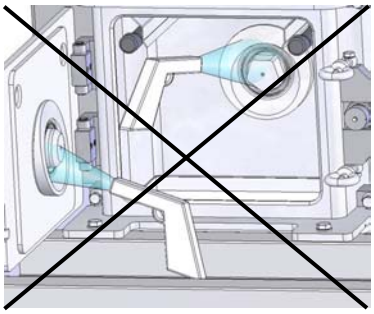

## Cleaning the tool and the infeed-discharge accessories

- Remove the tool and the accessories according to the instructions in Chapter 5 – Removing the tool and the infeed-discharge accessories

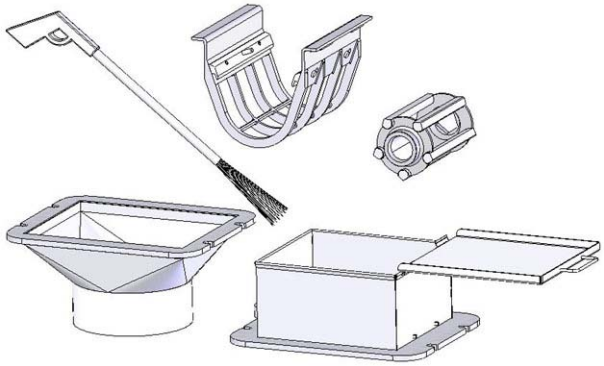

The tool/infeed-discharge accessory can be cleaned:

- With a wet cloth
  or
- With a low pressure water jet
  or
- With a high pressure water jet

- Do not use pointed or sharp tools. They may damage the tool/infeed-discharge accessory.

- Maximal cleaning temperature for sieves with rubber edges : 80°C

## Sterilization

- The tool and the infeed-discharge accessories can be sterilized at a temperature of 125°C.

Professional Milling and Handling of Powders

## Chemical resistance list

(italiano: vedi pagina 17)

The information on the following pages is based on tests under various different conditions. Many of the values have been determined at room temperature with a reaction time of 7 days (150 hours). In individual cases observations may differ between laboratory and practical tests. Because of differences in conditions of use and the composition of fluids the data given are only guidelines and should not be taken as binding. For these reasons we cannot give any guarantees as to the correctness of our recommendations in individual cases. If your operating conditions are unusual please feel free to discuss them with us.
Definition of information given in the table:

**On request:**
Information on resistance for ACM, IIR, SBR, AU/EU and NR is available

| A | | NBR | FPM | MVQ | EPDM | CR | MFQ | FFKM | FEP② FPA② PTFE② | Nichel alloy X-750 mat. nr. 2.4669③ |
|---|---|---|---|---|---|---|---|---|---|---|
| Acetaldehyde | | C | D | B | B | C | D | A① | A | A |
| Acetamide | | A | C | B | A | A | A | A① | A | |
| Acetate of copper | | B | D | D | A | B | D | A | A | B |
| Acetic acid | concentrated (glacial acetic acid) | B | D | B | B | D | D | A | A | B |
| | hot | D | D | C | C | D | D | A | A | B |
| Acetic anhydride | | D | D | B | B | B | D | A | A | B |
| Acetoacetic ester | | D | D | B | B | D | D | A | A | |
| Acetone | | D | D | D | A | D | D | A | A | A |
| Acetophenone | | D | D | D | A | D | D | A | A | |
| Acetyl chloride | | D | A | C | D | D | A | A | A | A |
| Acetylacetone | | D | D | D | A | D | D | A | A | |
| Acetylene, Ethene | | A | A | B | A | B | A | A | A | A |
| Acrylic acid ethyl ester | | D | D | B | B | D | D | A① | A | |
| Acrylonitrile | | D | C | D | D | D | D | A① | A | |
| Aero Shell 7A | | A | A | B | D | B | A | A | A | |
| Aero Shell 17 | | A | A | B | D | B | A | A | A | |
| Aero Shell 750 | | B | A | D | D | D | B | A | A | |
| Aero Shell Fluid 4 | | A | A | D | D | D | A | A | A | |
| Aerosafe 2300 | | D | D | C | A | D | C | – | A | |
| Aerosafe 2300 W | | D | D | C | A | D | C | – | A | |
| Air | | A | A | A | A | A | A | A | A | A |
| Air oil-free | 100°C | A | A | A | A | A | A | A | A | A |
| | 150°C | B | A | A | B | B | A | A | A | A |
| | 200°C | D | A | A | D | D | B | A | A | A |
| Alkazene® | | D | B | D | D | D | B | A | A | |
| Aluminium acetate | | B | D | D | A | B | D | A | A | |
| Aluminium bromide | | A | A | A | A | A | A | A | A | |
| Aluminium chloride | | A | A | B | A | A | A | A | A | B |
| Aluminium fluoride | | A | A | B | A | A | A | A | A | |
| Aluminium nitrate | | A | A | B | A | A | B | A | A | A |
| Aluminium phosphate | | A | A | A | A | A | A | A | A | |
| Aluminium sulphate | | A | A | A | A | A | A | A | A | C |
| Alums | | A | A | B | A | A | D | A | A | A |
| Ammonia gas | (cold) | A | D | A | A | A | D | A① | A | B |
| | gas (hot) | D | D | B | B | B | D | A① | A | B |
| | liquid (anhydrous) | B | D | B | A | A | D | A① | A | B |

① depending of compound, we suggest to discuss with us!
② for virgin PTFE O-Rings and O-Rings covered with FEP and PFA
③ for metal O-Rings and C-Rings

A stable
B can be used (static applications)
C limited stability (use not recommended)
D not stable

| | | NBR | FPM | MVQ | EPDM | CR | MFQ | FFKM | FEP② FPA② PTFE② | Nichel alloy X-750 mat. nr. 2.4669③ |
|---|---|---|---|---|---|---|---|---|---|---|
| Ammonium carbonate | | C | B | D | A | A | D | A | A | A |
| Ammonium chloride | | A | A | B | A | A | A | A | A | B |
| | 3 molar solution | A | B | A | A | A | A | A | A | A |
| Ammonium hydroxide concentrated | | D | C | A | A | A | A | A① | A | A |
| Ammonium nitrate | | A | B | B | A | A | A | A | A | B |
| Ammonium nitrite | | A | – | B | A | A | – | A | A | |
| Ammonium persulphate | | D | – | – | A | A | – | A | A | B |
| Ammonium persulphate solution | | D | – | – | A | A | – | A | A | |
| Ammonium phosphate | | D | – | – | A | A | – | A | A | |
| Ammonium phosphate | primary | A | B | B | A | B | B | A | A | B |
| | secondary | A | B | B | A | B | B | A | A | B |
| Ammonium phosphate | tertiary | A | B | B | A | B | B | A | A | B |
| Ammonium sulphate | | A | C | A | A | A | C | A | A | |
| Ammonium sulphide | | A | D | B | A | A | B | A | A | B |
| Amyl acetate | | A | D | B | A | A | B | A | A | |
| Amyl alcohol | | D | D | D | A | D | D | A | A | A |
| Amyl borate | | B | B | D | A | B | A | A | A | A |
| Amyl chloride | | A | A | – | D | A | – | A | A | |
| Amyl chloronaphthalene | | D | A | D | D | D | B | A | A | B |
| Amyl napthalene | | D | A | D | D | D | B | A | A | |
| Aniline (aniline oil) | | D | A | D | D | D | A | A | A | |
| Aniline dyes | | D | C | D | B | D | C | A | A | B |
| Aniline hydrochloride | | D | B | C | B | B | B | A | A | |
| Animal fat | | A | A | B | B | B | A | A | A | |
| Aqua regia | | D | B | D | C | D | C | A① | A | C |
| Argon | | B | B | C | B | D | B | A | A | |
| Aromatic fuels (Fuel C) 50 % | | A | A | A | A | A | A | A | A | |
| Arsenic acid (arsenic trichloride) | | A | D | D | D | B | A | A | A | |
| Asphalt | | A | A | A | A | A | A | A | A | C |
| ASTM-oil | No. 1 | B | A | D | D | B | B | A | A | A |
| | No. 2 | A | A | A | D | A | A | A | A | A |
| | No. 3 | A | A | D | D | B | A | A | A | A |
| | No. 4 | A | A | C | D | D | A | A | A | A |
| ASTM-reference | fuel A | B | A | D | D | D | B | A | A | A |
| | fuel B | A | A | D | D | B | A | A | A | A |
| | fuel C | A | A | D | D | D | A | A | A | A |
| ATF-oil | | B | A | D | D | D | B | A | A | A |

**B**

| | | | | | | | | | | |
|---|---|---|---|---|---|---|---|---|---|---|
| Barium chloride | | A | A | A | A | A | A | A | A | B |
| Barium hydroxide | | A | A | A | A | A | A | A | A | B |
| Barium sulphide | | A | A | A | A | A | A | A | A | |
| Beer | | A | A | A | A | A | A | A | A | A |
| Benzaldehyde | | D | D | D | A | D | D | A | A | B |
| Benzene | | D | A | D | D | D | A | A | A | A |
| Benzene-sulphonic acid 10 % | | D | A | D | D | B | B | A | A | |
| Benzoic | acid | D | A | D | B | D | B | A | A | A |
| | benzyl ester | D | A | – | D | D | A | A | A | |
| | methyl ester | D | A | D | D | D | A | A | A | |
| Benzophenone | | – | A | – | B | – | A | A | A | |
| Benzoyl chloride | | D | A | – | A | D | A | A | A | |
| Benzyl | alcohol | D | A | B | B | B | B | A | A | A |

① depending of compound, we suggest to discuss with us!
② for virgin PTFE O-Rings and O-Rings covered with FEP and PFA
③ for metal O-Rings and C-Rings

A stable
B can be used (static applications)
C limited stability (use not recommended)
D not stable

| | | NBR | FPM | MVQ | EPDM | CR | MFQ | FFKM | FEP②<br>FPA②<br>PTFE② | Nichel alloy X-750 mat. nr. 2.4669③ |
|---|---|---|---|---|---|---|---|---|---|---|
| Benzyl | chloride | D | A | D | D | D | A | A | A | A |
| Black liquor | | B | A | B | B | B | B | – | – | A |
| Blast furnace gas | | D | A | A | D | D | B | A | A | |
| Bleaching lye | | D | A | B | A | D | B | B | A | |
| Borax | | B | A | B | A | D | B | B | A | A |
| Bordeaux mixture | | B | A | B | A | B | B | A | A | |
| Boric acid | | A | A | A | A | A | A | A | A | B |
| Boron liquid (HEF) | | B | A | D | D | D | B | – | A | |
| Bromine | | D | A | D | D | D | B | A | A | C |
| | water | D | A | D | D | D | B | A | A | |
| Bromobenzol | | D | A | D | D | D | B | B | B | |
| Bromochloromethane | | D | A | D | B | D | B | A | A | |
| Bromochlorotrifluoroethane | | D | A | D | D | D | B | A | B | |
| Bromopentafluoride | | D | D | D | D | D | D | B | B | |
| Bromotrifluoride | | D | D | D | D | D | D | B | B | |
| Butadiene (monomer) | | D | A | D | D | D | A | A | A | A |
| Butan-2-one (methyl ethyl ketone, MEK) | | D | D | D | A | D | D | A | A | |
| Butane | | A | A | D | D | A | A | A | A | A |
| Butanol (butyl alcohol) | | A | A | B | B | A | A | A | A | A |
| Butene | | B | A | D | D | C | B | A | A | |
| Butter | | A | A | B | A | B | A | A | A | A |
| Butyl | acetate | D | D | D | B | D | D | A | A | B |
| | acetylricinoleate | B | A | – | A | B | B | A | A | |
| | acrylate | D | D | D | D | D | D | A① | A | |
| | alcohol | A | A | B | B | A | A | A | A | A |
| | butyrate | D | A | – | A | D | A | A | A | |
| | carbitol | D | C | D | A | C | D | A | A | |
| | catechol | D | A | – | B | B | A | A | A | |
| | cellosolve | D | D | D | B | D | D | A | A | |
| | glycol | C | D | B | B | C | D | A | A | |
| | glycoladipate | D | B | B | B | D | B | A | A | |
| | mercaptan | D | A | D | D | D | – | A | A | |
| | oleate | D | A | – | D | D | B | A | A | |
| | stearate | B | A | B | D | D | B | A | – | |
| Butylooo n-Butyl ether | | C | D | D | C | D | C | A | A | |
| Butylamine, n-Butylamine | | C | D | B | D | D | D | A① | A | |
| Butyraldehyde | | D | D | D | B | D | D | A① | A | |
| Butyric acid | | D | B | D | B | D | D | A | A | C |

**C**

| | | | | | | | | | | |
|---|---|---|---|---|---|---|---|---|---|---|
| Calcium | acetate | B | D | D | A | B | D | A | A | |
| | bisulphite | A | A | A | D | A | A | A | A | |
| | chloride | A | A | A | A | A | A | A | A | A |
| | cyanide | A | – | A | A | A | – | A | A | |
| | hydroxide | A | A | B | A | A | A | A | A | B |
| | hypochloride | B | A | B | A | B | B | A | A | C |
| | lysulphide | A | A | A | A | A | A | A | A | |
| | nitrate (nitrate of lime) | A | A | B | A | A | A | A | A | A |
| | silicate | A | A | – | A | A | – | A | A | |
| | sulphite | A | A | A | A | A | A | A | A | |
| | thiosulphate | B | A | A | A | A | A | A | A | |
| Caliche solution (Chile saltpetre) | | A | A | B | A | A | A | A | A | |

① depending of compound, we suggest to discuss with us!
② for virgin PTFE O-Rings and O-Rings covered with FEP and PFA
③ for metal O-Rings and C-Rings

A stable
B can be used (static applications)
C limited stability (use not recommended)
D not stable

| | | NBR | FPM | MVQ | EPDM | CR | MFQ | FFKM | FEP② FPA② PTFE③ | Nichel alloy X-750 mat. nr. 2.4669③ |
|---|---|---|---|---|---|---|---|---|---|---|
| Caproic aldehyde (Hexanal) | | – | D | B | B | – | D | A① | A | |
| Carbamates | | D | A | – | B | B | A | A | – | |
| Carbitol/Diethylene glycol monoethyl ether | | B | B | B | B | B | B | A | A | |
| Carbolic acid (phenol) | | D | A | D | D | D | B | A | A | |
| Carbon dioxide | dry | A | B | B | B | B | B | A | – | A |
| | moist | A | B | B | B | B | B | A | – | |
| Carbon | disulphide | D | A | D | D | D | A | A | A | A |
| | monoxide | A | A | A | A | B | B | A | – | A |
| | tetrachloride | B | A | D | D | D | B | B | B | A |
| Carbonic acid | | B | A | A | A | A | A | A | A | A |
| Castor oil | | A | A | A | B | A | A | A | A | A |
| Cellosolve (Ethylene glycol ethyl ether) | | D | D | D | B | D | D | A | A | |
| Cellosolve acetate | | D | D | D | B | D | D | A | A | |
| Cetane (Hexadecane) | | A | A | D | D | B | C | A | A | |
| Chloracetone | | D | D | D | A | D | D | A | A | |
| Chlorax | | B | A | – | B | B | A | A | A | |
| Chlordane | | B | A | D | D | C | B | A | A | |
| Chlordecane | | D | A | D | D | D | A | A | A | |
| Chloracetic acid | | D | D | D | B | D | D | A | A | B |
| Chlorextol | | B | A | D | D | B | B | A | A | |
| Chlorinated carbonic acid ethyl ester | | D | A | D | D | D | B | A | A | |
| Chlorine dioxide | | D | A | D | C | D | B | A | A | A |
| | 8 % Cl as CaClO in solution | D | A | D | D | D | B | A | A | |
| Chlorine | dry | D | B | D | D | D | A | A | A | A |
| | moist | C | A | – | B | D | B | B | A | |
| | napthaline | D | A | D | D | D | B | A | A | |
| | trifluoride | D | D | D | D | D | D | B | – | |
| | 1-chlorine-1-nitroethane | D | D | D | D | D | D | A | A | |
| Chloroacetic acid | | D | A | D | D | D | B | A | A | |
| Chlorobenzene (monochlorobenzene) | | D | A | D | D | D | B | A | A | B |
| Chloroform (Trichloromethane) | | D | A | D | D | D | B | A | A | A |
| Chloroprene | | D | A | D | D | D | B | A | A | |
| Chlorosulphonic acid | | D | D | D | D | D | D | A | A | B |
| Chlortoluene | | D | A | D | D | D | B | A | A | |
| Chrome bath electrolyte | | D | A | B | B | D | B | A | A | |
| Chromic alum | | A | A | A | A | A | – | A | A | A |
| Citric acid | | A | A | A | A | A | A | A | A | A |
| Cobalt chloride | | A | A | B | A | A | A | A | – | |
| | 2n | A | A | A | A | A | A | A | – | |
| Coconut oil | | A | A | A | C | C | A | A | A | A |
| Cod liver oil | | A | A | B | A | B | A | A | A | A |
| Coffee | | A | A | A | A | A | A | A | A | A |
| Colamine (ethanolamine) | | D | D | B | B | D | D | A① | A | |
| Coliche-solution | | B | – | – | B | A | – | – | A | |
| Compressed air supply (oil-free) | | A | A | A | A | A | A | A | A | A |
| Coolanol (Monsanto), Silicone oil | | A | A | D | D | A | B | A | A | |
| Copper chloride | | A | A | A | A | B | A | A | A | A |
| Copper cyanide | | A | A | A | A | A | A | A | – | |
| Cotton seed oil | | A | A | A | C | C | A | A | A | A |
| Creosote, carbolineum | | A | A | D | D | B | A | A | A | A |
| Cresilic acid | | D | A | D | D | D | B | – | A | |
| Crude oil | | B | A | D | D | D | B | A | A | A |

① depending of compound, we suggest to discuss with us!
② for virgin PTFE O-Rings and O-Rings covered with FEP and PFA
③ for metal O-Rings and C-Rings

A stable
B can be used (static applications)
C limited stability (use not recommended)
D not stable

| | | NBR | FPM | MVQ | EPDM | CR | MFQ | FFKM | FEP② FPA② PTFE② | Nichel alloy X-750 mat. nr. 2.4669③ |
|---|---|---|---|---|---|---|---|---|---|---|
| Cumene (isopropylbenzene) | | D | A | D | D | D | B | A | – | |
| Cyclohexane | | A | A | D | D | C | A | A | A | A |
| Cyclohexanol | | A | A | D | D | B | A | A | A | |
| Cyclohexanon | | D | D | D | B | D | D | A | A | |
| **D** | | | | | | | | | | |
| Decane | | A | A | B | D | C | A | A | A | |
| Delco brake fluid | | C | D | C | A | B | D | A | A | |
| Denatured alcohol | | A | A | A | A | A | A | A | A | |
| Detergent dissolved in water | | A | A | A | A | B | A | A | A | A |
| Developer (photo) | | A | A | A | B | A | A | A | A | |
| Diacetone alcohol | | D | D | D | A | D | D | A | A | |
| Diazinone (insecticide) | | C | B | D | D | C | B | – | A | |
| Dibenzyl | ether | D | D | D | B | D | D | A | A | |
| | sebacate | D | B | C | B | D | C | A | A | |
| Dibromethyl benzol | | D | A | D | D | D | B | A | A | |
| Dibromodifluoromethane | | D | – | D | B | D | D | B | – | |
| Dibutyl | amine | D | D | C | D | C | D | A① | A | |
| | ether | D | C | D | C | D | C | A | A | |
| | phthalate | D | C | C | B | D | C | A | A | |
| | sebacate | D | B | B | B | D | B | A | A | |
| Dichlorobutane (Tetramethylene chloride) | | B | A | D | D | D | B | A | A | |
| Dichloroisopropylether | | D | C | D | C | D | C | A | A | |
| Dichloromethane (Methylene chloride) | | D | B | D | D | D | B | A | A | |
| Dicyclohexylamine | | C | D | D | D | D | D | A① | A | |
| Diesel fuel | | A | A | D | D | C | A | A | A | A |
| Diethyl | ether | D | D | D | D | C | C | A | A | |
| | sebacate | D | B | B | B | D | B | A | A | |
| Diethylamine | | B | D | B | B | B | D | A① | A | |
| Diethylene glycol | | A | A | B | A | A | A | A | A | |
| Diisobutylene | | B | A | D | D | D | C | A | A | |
| Diisooctyl sebacate | | C | B | C | C | D | C | A | A | |
| Diisopropyl ketone | | D | D | D | A | D | D | A | A | |
| Dilute nitric acid | 3-molar | D | A | D | B | D | C | A | A | C |
| | concentrated | D | A | D | D | D | C | A | A | C |
| | red, fumingoooo | D | B | D | D | D | D | B | A | C |
| Dimethyl formamide (DMF) | | C | D | B | B | C | D | A | A | |
| 2,2-Dimethylbutane | | A | A | D | D | B | A | A | A | |
| 2,3-Dimethylbutane | | A | A | D | D | B | A | A | A | |
| Dimethylether (Methylether) | | A | A | A | A | C | A | A | A | |
| Dimethylhydrazine | | B | D | D | A | B | D | A | A | |
| 2,4-Dimethylpentane | | A | A | D | D | B | C | A | A | |
| Dimethylphthalate | | D | B | – | B | D | B | A | A | |
| Dinitrogen monoxide (laughing gas) | | A | A | A | B | A | A | A | A | |
| Dinitrotoluene | | D | D | D | D | D | D | A | – | |
| Dioctyl phthalate (DOP) | | D | B | C | B | D | B | A | A | |
| Dioctyl sebacate (DOS) | | D | B | C | B | D | C | A | A | |
| Dioxan | | D | D | D | B | D | D | A | A | |
| Dioxolan | | D | D | D | B | D | D | A | A | |
| Dipentene (paint solvent) | | B | A | D | D | D | C | A | A | |
| Diphenyl (biphenyl) | | D | A | D | D | D | B | A | A | |
| Diphenyl ether | | D | A | C | D | D | B | A | A | A |

① depending of compound, we suggest to discuss with us!
② for virgin PTFE O-Rings and O-Rings covered with FEP and PFA
③ for metal O-Rings and C-Rings

A stable
B can be used (static applications)
C limited stability (use not recommended)
D not stable

| | | NBR | FPM | MVQ | EPDM | CR | MFQ | FFKM | FEP② FPA② PTFE② | Nichel alloy X-750 mat. nr. 2.4669③ |
|---|---|---|---|---|---|---|---|---|---|---|
| Dowtherm A thermal oil | | D | A | D | D | D | B | A | A | |
| Dowtherm E thermal oil | | D | A | D | D | D | B | A | A | |
| Drilling oil | | A | A | D | D | B | A | A | A | |
| Dye solvent | | D | B | D | D | D | B | A | A | |
| **E** | | | | | | | | | | |
| Electroplating solution | chrome | D | A | B | B | D | B | A | A | |
| | other metals | – | A | D | A | – | – | A | A | |
| Epichlorhydrin | | D | D | D | B | D | D | A | A | A |
| Epoxy resins | | – | D | – | A | A | – | A | A | |
| Ethan | | A | A | D | D | B | B | A | A | A |
| Ethane | | A | A | B | B | B | A | A | A | A |
| Ethane thiol | | D | B | C | D | C | – | A | A | |
| Ethanol (ethyl alcohol) | | A | C | A | A | A | A | A | A | A |
| Ethanolamine (Colamin) | | B | D | B | B | B | D | A① | A | |
| Ether (various) | | D | C | D | C | D | C | A | A | A |
| Ethyl | acetate | D | D | B | B | D | D | A | A | B |
| | acrylic acid | D | – | D | B | B | D | A① | A | |
| | alcohol (ethanol) | A | C | A | A | A | A | A | A | A |
| | benzoate | D | A | D | D | D | A | A | A | |
| | bromide | B | A | D | D | D | A | A | A | |
| | chloride | A | A | D | A | A | A | A | A | A |
| | cyclopentane | A | A | D | D | C | A | A | A | |
| | dichloride | D | B | D | D | D | B | A | A | |
| | ether | C | D | D | C | D | C | A | A | A |
| | oxalate | D | A | D | A | D | B | A | A | |
| | pentachlorobenzene | D | A | D | D | D | B | A | A | |
| | silicate | A | A | B | A | A | A | A | A | |
| Ethylbenzene | | D | A | D | A | D | A | A | A | A |
| Ethylcellulose | | B | D | B | B | B | D | A | A | B |
| Ethylene | chlorhydrin | D | A | C | B | B | B | A | A | A |
| | dibromide | D | A | D | C | D | C | A | A | |
| | dichloride | D | A | D | C | D | C | A | A | A |
| | glycol (glycol) | A | A | A | A | A | A | A | A | B |
| | oxide | D | D | D | C | D | D | A① | A | A |
| | oxide (12 %) and Freon (80 %) | C | D | D | B | D | D | A① | A | |
| | trichloride («Tri») | D | A | D | D | D | B | A | A | |
| | 2-ethyl-1-hexanol (Isooctanol) | A | A | B | A | A | A | A | A | |
| Ethylenediamine | | A | D | A | A | A | D | A① | A | |
| **F** | | | | | | | | | | |
| Fatty acids | | B | A | B | C | B | A | A | A | A |
| Fluorolub | | A | B | A | A | A | B | – | – | |
| Formaldehyde | | C | D | B | B | C | D | A① | A | A |
| Formic acid methylester | | D | D | – | B | B | – | A | A | B |
| Freon | 11 | B | B | D | D | C | B | B | A | |
| | 12 | A | A | D | B | A | D | B | A | |
| | 12 and ASTM oil no. 2 (50:50 mix) | B | A | D | D | C | B | B | A | |
| | 12 and Suniso 4G (50 : 50 mix) | B | A | D | D | C | B | B | A | |
| | 13 | A | A | D | A | A | D | B | – | |
| | 13 B1 | A | A | D | A | A | B | B | – | |
| | 14 | A | A | D | A | A | B | B | – | |

① depending of compound, we suggest to discuss with us!
② for virgin PTFE O-Rings and O-Rings covered with FEP and PFA
③ for metal O-Rings and C-Rings

A stable
B can be used (static applications)
C limited stability (use not recommended)
D not stable

| | | NBR | FPM | MVQ | EPDM | CR | MFQ | FFKM | FEP② FPA② PTFE② | Nichel alloy X-750 mat. nr. 2.4669③ |
|---|---|---|---|---|---|---|---|---|---|---|
| Freon | 21 | D | D | D | D | B | B | A | – | |
| | 22 | D | D | D | A | A | B | B | A | |
| | 22 and ASTM oil no. 2 (50:50 mix) | D | B | D | D | B | B | B | A | |
| | 31 | D | D | D | A | A | B | B | – | |
| | 32 | A | D | D | A | A | B | B | – | |
| | 112 | B | A | D | D | B | B | B | – | |
| | 113 | A | B | D | D | A | D | B | A | |
| | 114 | A | A | D | A | A | B | B | – | |
| | 114 B2 | B | B | D | D | A | B | B | – | |
| | 115 | A | A | D | A | A | B | B | – | |
| | 502 | B | B | A | A | A | – | B | – | |
| | BF | B | A | D | D | B | – | B | | |
| | C 318 | A | B | D | A | A | B | B | – | |
| | K-142b | A | D | – | A | A | – | B | – | |
| | K-152a | A | D | – | A | A | – | B | – | |
| | MF | B | B | D | D | D | – | B | – | |
| | PCA | A | B | D | D | A | – | B | – | |
| | TF | A | B | D | D | A | D | A | A | |
| Fuel oil | | A | A | D | D | B | A | A | A | A |
| Fumaric acid | | A | B | D | D | B | D | A | A | |
| Fural (2-furaldehyde) | | D | D | D | B | D | D | A① | A | B |
| Furan | | D | D | D | D | D | D | A | A | |
| Furfur alcohol | | D | D | D | B | D | D | A | A | |
| Furyl carbinol | | D | – | D | B | D | D | – | A | |
| **G** | | | | | | | | | | |
| Gallic acid | | B | A | A | B | B | A | A | A | |
| Gallotannic acid | tannin | A | A | B | A | B | A | A | A | |
| | 10% | A | A | B | A | A | A | A | A | |
| Gear oil type A | | A | A | B | D | B | A | A | A | |
| Gelatines | | A | A | A | A | A | A | A | A | A |
| Generator gas | | A | A | B | D | B | B | A | A | |
| Girling brake fluid | | C | D | – | A | B | D | A | A | |
| Glacial acetic acid (100 % acetic acid) | | B | D | B | B | D | D | A | A | |
| Glauber salt (Sodium sulphate) | | D | A | A | B | B | A | A | A | |
| Glucose | | A | A | A | A | A | A | A | A | A |
| Glycerine | | A | A | A | A | A | A | A | A | A |
| | triacetate | B | D | B | A | B | D | A | A | |
| Glycol (ethylene glycol) | | A | A | A | A | A | A | A | A | |
| Green Liquor | | B | A | – | A | B | B | A | A | |
| Groundnut oil | | A | A | A | C | C | A | A | A | A |
| **H** | | | | | | | | | | |
| Halon 1301 | | A | A | D | A | A | B | B | A | |
| Halothane (narcotic) | | D | A | D | D | D | B | A | A | |
| Halowax oil | | D | A | D | D | D | A | A | A | |
| Heavy water | | A | A | A | A | B | A | A | A | |
| Helium | | A | A | A | A | A | A | A | A | |
| n-heptane | | A | A | D | D | B | A | A | A | |
| n-hexaldehyde | | D | D | B | A | A | D | A① | A | |
| n-hexane | | A | A | D | D | B | A | A | A | |
| 1-n-hexene | | B | A | D | D | B | A | A | – | |

① depending of compound, we suggest to discuss with us!
② for virgin PTFE O-Rings and O-Rings covered with FEP and PFA
③ for metal O-Rings and C-Rings

A stable
B can be used (static applications)
C limited stability (use not recommended)
D not stable

| | | NBR | FPM | MVQ | EPDM | CR | MFQ | FFKM | FEP② FPA② PTFE② | Nichel alloy X-750 mat. nr. 2.4669③ |
|---|---|---|---|---|---|---|---|---|---|---|
| Hexylalcohol | | A | A | B | C | B | B | A | A | |
| Houghto-Safe | 271 (water/glycol, HFC) | A | B | B | A | B | B | A | A | |
| | 620 (water/glycol, HFC) | A | B | B | A | B | B | A | A | |
| | 1010 (phosphate ester, HFD-R) | D | A | C | A | D | B | A | A | |
| | 1055 (phosphate ester, HFD-R) | D | A | C | A | D | B | A | A | |
| | 1120 (phosphate ester, HFD-R) | D | A | C | A | D | B | A | A | |
| | 5040 (water/oil emulsion) | A | A | C | D | B | B | A | A | |
| Hydraulic fluid (mineral oil based) | | A | A | B | D | B | A | A | A | A |
| Hydrazine | | B | B | B | A | B | B | A | A | C |
| Hydrobromic acid | | D | A | D | A | D | C | A | A | C |
| Hydrobromic zcid 40% | | D | A | D | A | D | C | A | A | C |
| Hydrochloric acid | 3-molar | C | A | D | A | C | B | A | A | C |
| | concentrated | D | A | D | C | D | C | A | A | C |
| Hydrocyanic acid | | B | A | C | A | B | B | A | A | B |
| | < 65% cold | C | A | D | A | A | D | A① | A | B |
| | > 65% cold | D | A | D | C | D | D | B | A | B |
| | < 65% hot | D | C | D | D | C | D | B | A | B |
| | > 65% hot | D | C | D | D | D | D | B | A | B |
| Hydrofluosilicic acid | | B | A | D | A | B | D | B | B | |
| Hydrogen fluoride (hydrofluoric acid, anhydrous) | | D | D | D | A | D | D | B | A | C |
| Hydrogen gas | cold | A | A | C | A | A | C | A | A | |
| | hot | A | A | C | A | A | C | A | A | |
| Hydrogen peroxide | 90 % | D | A | B | C | D | B | A | A | B |
| | dilute | B | A | A | A | A | A | A | A | B |
| Hydrogen sulphide | dry, cold | A | D | C | A | A | C | A | A | B |
| | dry, hot | D | D | C | A | B | C | A | A | B |
| | moist, cold | D | D | C | A | A | C | A | A | B |
| | moist, hot | D | D | C | A | B | C | A | A | B |
| Hydroquinone | | C | B | D | D | D | B | A | A | A |
| Hydyn | | B | D | D | A | B | D | A | A | |

**I**

| | | | | | | | | | | |
|---|---|---|---|---|---|---|---|---|---|---|
| Iodine | | B | A | – | B | D | A | A | A | |
| | pentafluoride | D | D | D | D | D | D | B | – | |
| Iron chloride | | A | A | B | A | B | A | A | A | C |
| | nitrate | A | A | B | A | A | A | A | A | C |
| Isobutyl alcohol (isobutanol) | | B | A | A | A | A | B | A | A | |
| Isobutyl-n-butyrate | | D | A | – | A | D | A | A | A | |
| Isododecane | | A | A | D | D | B | A | A | A | |
| Iso-octane | | A | A | D | D | B | A | A | A | |
| Isophoron (ketone) | | D | D | D | A | D | D | A | A | |
| Isopropanol (Isopropyl alcohol) | | B | A | A | A | B | B | A | A | |
| Isopropyl | benzene | D | A | D | D | D | B | A | A | |
| | chloride | D | A | D | D | D | B | A | A | |
| Isopropylacetat | | D | D | D | B | D | D | A | A | |
| Isopropylacetate | | B | D | D | D | C | C | A | A | |
| Isopropylalkohol (Isopropanol) | | B | A | A | A | B | B | A | A | |

**J**

| | | | | | | | | | | |
|---|---|---|---|---|---|---|---|---|---|---|
| JP 3 (MIL-J-5624) | | A | A | D | D | D | A | A | A | |
| JP 4 (MIL-J-5624) | | A | A | D | D | D | B | A | A | |
| JP 5 (MIL-J-5624) | | A | A | D | D | D | B | A | A | |

① depending of compound, we suggest to discuss with us!
② for virgin PTFE O-Rings and O-Rings covered with FEP and PFA
③ for metal O-Rings and C-Rings

A stable
B can be used (static applications)
C limited stability (use not recommended)
D not stable

| | | NBR | FPM | MVQ | EPDM | CR | MFQ | FFKM | FEP② FPA② PTFE② | Nichel alloy X-750 mat. nr. 2.4669③ |
|---|---|---|---|---|---|---|---|---|---|---|
| JP 6 (MIL-J-5624) | | A | A | D | D | D | B | A | A | |
| JP X (MIL-F-25604) | | A | D | D | D | B | D | – | A | |
| **K** | | | | | | | | | | |
| Kaliumcyanidoooo | | A | A | A | A | A | A | A | A | B |
| Kerosine | | A | A | D | D | B | A | A | A | A |
| **L** | | | | | | | | | | |
| Lactams | | D | D | – | B | B | D | A | – | |
| Lactic acid | cold | A | A | B | A | A | A | A | A | B |
| | hot | D | A | B | D | D | B | A | A | B |
| Lard, animal fat | | A | A | B | B | B | A | A | A | A |
| Lavender oil | | B | A | D | D | D | B | A | A | A |
| Lead | acetate (sugar of lead) | B | D | D | A | B | D | B | A | A |
| | nitrate | A | A | B | A | A | A | B | A | A |
| | sulphate | B | A | B | A | A | A | A | A | |
| Light crude oil (crude benzene) | | A | A | D | D | B | A | A | A | A |
| Light lubricants | | A | A | D | D | D | A | A | A | A |
| Lime milk | | A | A | B | A | B | A | A | A | A |
| Linoleic acid | | B | B | B | D | B | – | A | A | |
| Linseed oil | | A | A | A | C | C | A | A | A | A |
| Liquid gas (Propane, Butane, Propylene) | | A | A | C | D | B | C | A | A | |
| Liquimoly | | A | A | D | D | B | A | A | A | |
| Lubricating oils | di-ester based | B | A | D | D | C | B | A | A | A |
| | petroleum based | A | A | D | D | B | A | A | A | A |
| | SAE 10, 20, 30, 40, 50 | A | A | C | D | B | A | A | A | A |
| **M** | | | | | | | | | | |
| Magnesium chloride | | A | A | A | A | A | A | A | A | A |
| | hydroxide | B | A | A | A | B | A | A | A | A |
| | sulphate | A | A | A | A | A | A | A | A | A |
| Maize oil | | A | A | A | C | C | A | A | A | A |
| Malathion (insecticide) | | B | A | D | D | – | B | A | A | |
| Maleic acid | | D | A | D | D | D | – | A | A | B |
| | anhydrous | D | D | – | B | D | – | A | A | |
| Malic acid | | A | A | D | D | B | D | A | A | A |
| Mercury | | A | A | A | A | A | A | A | A | A |
| Mercury | chloride | A | A | A | A | A | A | A | A | C |
| | vapour | A | A | A | A | A | – | A | A | |
| Mesityl oxide (ketone) | | D | D | D | B | D | D | A | A | |
| Methacrylic acid | | D | C | D | B | B | D | A | A | |
| Methane | | A | A | D | D | B | B | A | A | A |
| Methyl | 2-Methyl pentane | A | A | D | D | B | C | A | A | |
| | 3-Methyl pentane | A | A | D | D | B | C | A | A | |
| | acetate | D | D | D | B | B | D | A | A | |
| | aceto acetate | D | D | B | B | D | D | A | A | |
| | alcohol (methanol) | A | D | A | A | A | A | A | A | A |
| | bromide | B | A | D | D | D | A | A | A | |
| | butyl ketone | D | D | D | A | D | D | A | A | |
| | carbonate | D | A | D | D | D | B | A | A | |
| | cellulose | B | D | B | B | B | D | A | A | |
| | chloride | D | A | D | C | D | B | A | A | A |

① depending of compound, we suggest to discuss with us!
② for virgin PTFE O-Rings and O-Rings covered with FEP and PFA
③ for metal O-Rings and C-Rings

A stable
B can be used (static applications)
C limited stability (use not recommended)
D not stable

| | | NBR | FPM | MVQ | EPDM | CR | MFQ | FFKM | FEP② FPA② PTFE② | Nichel alloy X-750 mat. nr. 2.4669③ |
|---|---|---|---|---|---|---|---|---|---|---|
| Methyl | chloroform | D | A | D | D | D | B | A | A | |
| | ether (dimethyl ether) | A | A | A | A | C | A | A | A | |
| | ethyl ketone (butanon, MEK) | D | D | D | A | D | D | A | A | B |
| | ethyl ketone peroxide | D | D | B | D | D | D | A① | A | |
| | glycol | C | D | D | B | C | D | A | A | |
| | isobutyl ketone (MIBK) | D | D | D | C | D | D | A | A | |
| | methacrylate | D | D | D | D | D | D | A① | – | |
| | oleate | D | A | – | B | D | B | A | A | |
| Methylaniline | | D | B | – | D | D | – | A | A | |
| Methylcyclopentane | | D | A | D | D | D | B | A | A | |
| Methylene chloride (dichloromethane) | | D | B | D | D | D | B | A | A | |
| Methylisopropylketone | | D | D | D | B | D | D | A | A | |
| Metilacrilato | | D | D | D | B | B | D | A | – | |
| Milk | | A | A | A | A | A | A | A | A | A |
| Mineral oils | | A | A | B | D | B | A | A | A | A |
| Mixed amines | | D | D | B | B | B | D | A① | A | |
| Molten sulphur | | D | A | C | C | C | C | A | – | A |
| Monochlorobenzene (chlorobenzene) | | D | A | D | D | D | B | A | A | B |
| Mopar brake fluid | | C | D | C | A | B | D | A | A | |
| **N** | | | | | | | | | | |
| Naphtha | | B | A | D | D | D | B | A | A | |
| Naphthaline | | D | A | D | D | D | A | A | A | A |
| Naphthenic acid | | B | A | D | D | D | A | A | A | A |
| Natural gas | | A | A | A | D | A | C | A | A | A |
| n-Butyl benzoate | | D | A | – | A | D | A | A | A | |
| Neat's foot oil | | A | A | B | B | D | A | A | A | |
| Neon | | A | A | A | A | A | A | A | A | |
| Neville and Winther's acid | | D | A | D | B | D | B | A | A | |
| Nickel acetate | | B | D | D | A | B | D | A | A | |
| | chloride | A | A | A | A | B | A | A | A | B |
| | sulphate | A | A | A | A | A | A | A | A | A |
| Nitrobenzene | | D | B | D | D | D | D | A | A | B |
| Nitroethane | | D | A | D | B | B | D | A | A | |
| Nitrogen | | A | A | A | A | A | A | A | A | A |
| Nitromethane | | D | A | D | B | C | D | A | A | |
| Nitropropane | | D | A | D | B | D | D | A | A | |
| Nitrotoluene (40 % + dinitrotoluene 60 % mix) | | D | C | D | D | D | C | A | A | |
| Non-mineral oil based brake fluid | | C | D | C | A | B | D | A | A | A |
| n-propyl acetone | | D | D | D | A | D | D | A | A | |
| **O** | | | | | | | | | | |
| Octachlorotoluene | | D | A | D | D | D | B | A | A | |
| Octadecane | | A | A | D | D | B | A | A | A | |
| Octyl alcohol | | B | A | B | A | B | B | A | A | |
| Oleic acid | | C | B | D | D | D | B | A | A | A |
| Oleum (fuming sulphuric acid) | | D | A | D | D | D | D | A | A | A |
| Olive oil | | A | A | A | B | B | A | A | A | |
| Ortho-chloroethyl benzene | | D | A | D | D | D | B | A | A | |
| Orthochlorophenol | | D | A | D | D | D | B | A | A | |
| Ortho-dichlorobenzene | | D | A | D | D | D | B | A | A | |
| Ortho-n-octane | | B | A | D | D | D | B | A | A | |

① depending of compound, we suggest to discuss with us!
② for virgin PTFE O-Rings and O-Rings covered with FEP and PFA
③ for metal O-Rings and C-Rings

A stable
B can be used (static applications)
C limited stability (use not recommended)
D not stable

| | | NBR | FPM | MVQ | EPDM | CR | MFQ | FFKM | FEP② FPA② PTFE② | Nichel alloy X-750 mat. nr. 2.4669③ |
|---|---|---|---|---|---|---|---|---|---|---|
| Oxalic acid | | B | A | B | A | B | A | A | A | B |
| Oxygen, liquid | | D | D | D | D | D | D | A① | A | A |
| Ozone | | D | A | A | A | C | A | A① | A | A |
| **P** | | | | | | | | | | |
| Paint thinners | | D | D | D | D | D | D | A | A | A |
| Paints | | B | A | D | D | D | B | A | A | A |
| Palmitic acid | | A | A | D | B | B | A | A | A | A |
| n-pentane | | A | A | D | D | A | C | A | A | |
| Perchloric acid 2-molar | | D | A | D | B | B | A | A | A | |
| Petrol | | A | A | D | D | B | A | A | A | A |
| Phenol | | D | A | D | D | D | B | A | A | A |
| Phenyl ethyl ether | | D | D | D | D | D | D | A | – | |
| Phenylhydrazine | | D | A | D | D | D | D | A | A | |
| Phoron | | D | D | D | A | D | D | A | A | |
| Phosphate of calcium | | A | A | A | A | B | A | A | A | |
| Phosphoric acid, 3-molar aqueous solution | | D | A | B | A | C | B | A | A | A |
| Phosphoric acid, 3-molar concentrated molten | | D | A | C | B | D | B | A | A | A |
| Phosphoric acid, 3-molar Phosphorous chloride | | D | A | D | A | D | A | A | A | |
| Picric acid | aqueous solution | A | A | B | A | A | B | A | A | A |
| | molten | B | A | D | B | B | B | B | A | A |
| Pine oil | | A | A | D | D | D | A | A | A | |
| Pinene | | B | A | D | D | C | A | A | A | |
| Piperidine | | D | D | D | D | D | D | A① | – | |
| Polyvinyl acetate emulsion | | – | – | – | A | B | – | A | A | |
| Potassium | acetate | B | D | D | A | B | D | A | A | A |
| | chloride | A | A | A | A | A | A | A | A | A |
| | copper ferricyanide | A | A | A | A | A | A | A | A | |
| | dichromate | A | A | A | A | A | A | A | A | B |
| | hydroxide solutions (dilute) | B | B | B | A | B | B | A | A | B |
| | hydroxide caustic potash 50 % | B | D | C | A | B | C | A | A | B |
| | nitrate | A | A | A | A | A | A | A | A | B |
| | sulphate | A | A | A | A | A | A | A | A | A |
| | sulphite | A | A | A | A | A | A | A | A | |
| Prestune antifreeze | | A | A | A | A | A | A | A | A | |
| Propane | | A | A | D | D | B | B | A | A | A |
| Propionitrile | | A | A | D | D | B | C | A | A | |
| Propyl | acetate | D | D | D | B | D | D | A | A | |
| | alcohol (Propanol) | A | A | A | A | A | A | A | A | |
| | nitrate | D | D | D | B | D | D | A | A | |
| Propylene | | D | A | D | D | D | B | A | A | A |
| Propylene oxide | | D | D | D | B | D | D | A① | A | |
| Pyradine | | D | D | D | B | D | D | A | A | A |
| Pyranol, transformer oil (postchlorinated biphenylene) | | A | A | D | D | B | A | A | A | |
| Pyrolube | | D | A | B | B | D | B | – | A | |
| Pyrrole | | D | D | B | D | D | D | A | A | |
| **R** | | | | | | | | | | |
| Radioactive radiation | | C | D | C | C | C | D | – | D | |
| Rape oil | | A | A | D | A | B | A | A | A | A |

① depending of compound, we suggest to discuss with us!
② for virgin PTFE O-Rings and O-Rings covered with FEP and PFA
③ for metal O-Rings and C-Rings

A stable
B can be used (static applications)
C limited stability (use not recommended)
D not stable

| | | NBR | FPM | MVQ | EPDM | CR | MFQ | FFKM | FEP② FPA② PTFE③ | Nichel alloy X-750 mat. nr. 2.4669③ |
|---|---|---|---|---|---|---|---|---|---|---|
| **S** | | | | | | | | | | |
| Salicylic acid | | B | A | A | A | A | A | A | A | B |
| Salts of | ammonium | A | B | B | A | B | B | A | A | B |
| | barium | A | A | A | A | A | A | A | A | |
| | calcium | A | A | B | A | A | A | A | A | |
| | copper | A | A | A | A | A | A | A | A | |
| | magnesium | A | A | A | A | A | A | A | A | A |
| | nickel | A | A | A | A | B | A | A | A | |
| | potassium | A | A | A | A | A | A | A | A | A |
| | sodium | A | A | A | A | B | A | A | A | A |
| | zinc | A | A | A | A | A | A | A | A | B |
| Seawater | containing chlorine and salt | D | A | D | D | D | A | A | A | |
| | salt water | A | A | A | A | A | A | A | A | A |
| Silicate ester | | B | A | D | D | A | A | A | A | A |
| Silicone greases | | A | A | D | A | A | A | A | A | A |
| Silicone oils | | A | A | D | A | A | A | A | A | A |
| Silver nitrate | | B | A | A | A | A | A | A | A | B |
| Soda (sodium carbonate) | | A | A | A | A | A | A | A | A | A |
| Soapy water | | A | A | A | A | B | A | A | A | A |
| Sodium | acetate | B | D | D | A | B | D | A | A | B |
| | bicarbonate (baking soda) | A | A | A | A | A | A | A | A | B |
| | bisulphateoooo | A | A | A | A | A | A | A | A | B |
| | borate (Borax) | A | A | A | A | A | A | A | A | |
| | carbonate (soda)oooo | A | A | A | A | A | A | A | A | B |
| | chloride (common salt) | A | A | A | A | A | A | A | A | B |
| | cyanide | A | A | A | A | A | A | A | A | |
| | hydroxide (caustic soda) 3 molar | B | B | A | A | B | B | A | A | A |
| | hypochlorite | C | A | C | C | B | B | A | A | A |
| | metaphosphate (Calgon) | A | A | – | A | B | A | A | A | A |
| | metasilicate | A | A | – | A | A | – | A | A | A |
| | nitrate (saltpetre) | B | A | D | A | B | A | A | A | A |
| | perborate | B | A | B | A | B | A | A | A | |
| | peroxide | B | A | D | A | B | A | A | A | B |
| | phosphate primary | A | A | D | A | B | A | A | A | A |
| | phosphate secondary | A | A | D | A | B | A | A | A | A |
| | phosphate tertiary | A | A | A | A | B | A | A | A | A |
| | sulphate (Glauber's salt) | A | A | A | A | A | A | A | A | A |
| | sulphide | A | A | A | A | A | A | A | A | A |
| | sulphite | A | A | A | A | A | A | A | A | |
| | thiosulphate (fixer) | B | A | A | A | A | A | A | A | |
| Soya oil | | A | A | A | C | C | A | A | A | A |
| **St** | | | | | | | | | | |
| Stannic chloride | | A | A | B | A | D | A | A | A | |
| | 50% | A | A | B | A | D | A | A | A | |
| Stannous chloride | | A | A | B | A | A | A | A | A | |
| Steam | below 150°C | D | C | C | A | D | D | A | A | A |
| | above 150 °C | D | D | D | B | D | D | A | A | A |
| Stearic acid | | B | A | B | B | B | A | A | A | A |
| Styrene (monomer) | | D | B | D | D | D | C | A① | A | |
| Sugar cane solution | | A | A | A | A | A | A | A | A | A |
| Sugar solutions | | A | A | A | A | B | A | A | A | A |
| Sugar-beet juice | | A | A | A | A | B | A | A | A | A |

① depending of compound, we suggest to discuss with us!
② for virgin PTFE O-Rings and O-Rings covered with FEP and PFA
③ for metal O-Rings and C-Rings

A stable
B can be used (static applications)
C limited stability (use not recommended)
D not stable

| | | NBR | FPM | MVQ | EPDM | CR | MFQ | FFKM | FEP② FPA② PTFE② | Nichel alloy X-750 mat. nr. 2.4669③ |
|---|---|---|---|---|---|---|---|---|---|---|
| Sulphur | | D | A | B | A | A | A | A | A | A |
| Sulphur chloride | D | A | C | D | D | A | A | A | A | |
| Sulphur dioxide | aqueous | D | D | B | A | B | B | A | A | A |
| | dry | D | D | B | A | D | B | A | A | A |
| | liquid under pressure | D | D | B | A | D | B | A | A | |
| Sulphur hexafluoride | | B | C | B | A | A | B | B | – | |
| Sulphur trioxide, dry | | D | A | B | B | D | B | A | A | A |
| Sulphuric acid | 3-molar | D | A | D | B | C | C | A | A | B |
| | concentrated | D | A | D | D | D | D | A | A | C |
| | fuming (20/25 % oleum) | D | A | D | D | D | D | A | A | C |
| Sulphurous acid | | B | A | D | B | B | B | A | A | B |
| Supergrade petrol | | A | A | D | D | B | B | A | A | A |
| **T** | | | | | | | | | | |
| Tar (bituminous) | | B | A | B | D | C | A | A | A | A |
| Tartaric acid | | A | A | A | B | B | A | A | A | B |
| Tetrabromethane | | D | A | D | D | D | B | A | A | |
| Tetrabutyl titanate | | B | A | – | A | B | A | A | A | |
| Tetrachloroethylene (perchloroethylene dry cleaning fluid) | | B | A | D | D | D | B | B | B | |
| Tetraethyl lead | | B | A | D | D | B | D | A | A | |
| | chips | B | A | D | D | D | B | A | A | |
| Tetrahydrofurane | | D | D | D | B | D | D | A | A | |
| Tetraline | | D | A | D | D | D | A | A | A | |
| Titanium (IV) chloride | | B | A | D | D | D | B | A | A | |
| Toluene | | D | A | D | D | D | B | A | A | A |
| Toluylene diisocyanate | | D | D | D | B | D | D | A | A | |
| Transformer oil | | A | A | B | D | B | A | A | A | |
| Transmission fluid type A | | A | A | B | D | B | A | A | A | |
| Triaryl phosphate | | D | A | C | A | D | B | A | A | |
| Tributoxyethyl phosphate | | D | A | – | A | D | B | A | A | |
| Tributyl | mercaptan | D | A | D | D | D | C | A | A | |
| | phosphate | D | D | D | A | D | D | A | A | |
| Trichloroacetic acid | | B | C | C | B | D | D | A | A | A |
| Trichloroethane | | D | A | D | D | D | B | A | A | A |
| Trichloroethylene (Trilene) | | D | A | D | D | D | B | A | A | B |
| Trichloromethane (Chloroform) | | D | A | D | D | D | B | A | A | |
| Triethanolamine | | C | D | D | B | B | D | A① | A | |
| Trifluoroethane | | D | A | D | D | D | B | B | A | |
| Trinitrotoluene | | D | B | – | D | B | B | A | – | |
| Trioctyl phosphate | | D | B | C | A | D | B | A | A | |
| Triorthocresylphosphate («TOCP») | | D | B | C | A | D | B | A | – | |
| Tripolyphosphate | | D | B | C | A | C | A | A | A | |
| Tung oil (China wood oil) | | A | A | D | D | B | B | A | A | |
| Turbine oil | | A | A | D | D | D | A | A | A | |
| Turpentine | | A | A | D | D | D | B | A | A | A |
| **V** | | | | | | | | | | |
| Vaseline | | A | A | D | D | B | A | A | A | |
| Vegetable oils | | A | A | A | C | C | A | A | A | A |
| Vinegar (5 % acetic acid) | | B | A | A | A | B | C | A | A | A |
| Vinyl acetylene | | A | A | B | A | B | – | A | A | |

① depending of compound, we suggest to discuss with us!
② for virgin PTFE O-Rings and O-Rings covered with FEP and PFA
③ for metal O-Rings and C-Rings

A stable
B can be used (static applications)
C limited stability (use not recommended)
D not stable

| | | NBR | FPM | MVQ | EPDM | CR | MFQ | FFKM | FEP② FPA② PTFE② | Nichel alloy X-750 mat. nr. 2.4669③ |
|---|---|---|---|---|---|---|---|---|---|---|
| **W** | | | | | | | | | | |
| Waste water | | A | A | A | A | B | A | A | A | A |
| Water (for industrial use) up to | 70 °C | A | B | A | A | B | A | A | A | A |
| | 100 °C | B | B | B | A | C | C | A | A | A |
| White oil | | A | A | D | D | B | A | A | A | |
| White pine oil | | B | A | D | D | D | A | A | A | |
| Wine and whisky | | A | A | A | A | A | A | A | A | A |
| Wolman's salt (wood impregnation)? | | A | A | A | A | B | A | A | A | |
| Wood oil | | A | A | D | D | B | B | A | A | |
| Wood vinegar | | D | D | – | B | D | D | A | A | |
| **X** | | | | | | | | | | |
| Xenon | | A | A | A | A | A | A | A | A | |
| Xylene | | D | A | D | D | D | A | A | A | A |
| Xylidine (mixture of aromatic amines) | | C | D | D | D | D | D | A① | A | |
| **Z** | | | | | | | | | | |
| Zeolites | | A | A | A | A | A | A | A | A | |
| Zinc acetate | | B | D | D | A | B | D | A | A | |
| | chloride | A | A | A | A | A | A | A | A | A |
| | sulphate | A | A | A | A | A | A | A | A | B |

① depending of compound, we suggest to discuss with us!
② for virgin PTFE O-Rings and O-Rings covered with FEP and PFA
③ for metal O-Rings and C-Rings

A stable
B can be used (static applications)
C limited stability (use not recommended)
D not stable

| | |
|---|---|
| Projet / Projekt / Project: | PRO-11-0078 |
| Type / Typ / Type : | MF-3 |
| N° de série / Serien Nr. / Serial Nr.: | 11007821034 / 11007835099 |
| Client / Kunde / Customer : | Novartis Pharmaceutical Manufacturing ; SG-Singapore |

**Used seals (FDA-conform)**

Gylon ( PTFE), EPDM, FEP-O-SEAL, Silikon, Ecoflon5

**Remarques / Bemerkungen / Remarks:**

We confirm that the seals that are used by Novartis are resistant to the used cleaning agents. .....



Professional Milling and Handling of Powders

# CALCUL DE LA SURFACE EN CONTACT AVEC LE PRODUIT - MF-3
## OBERFLAECHENBERECHNUNG DER PRODUKTBERUERTEN TEILE / CALCULATION OF THE AREA IN CONTACT WITH THE PRODUCT



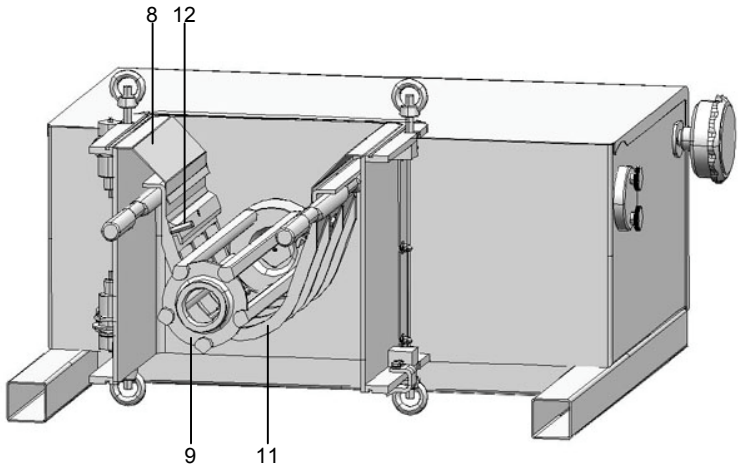


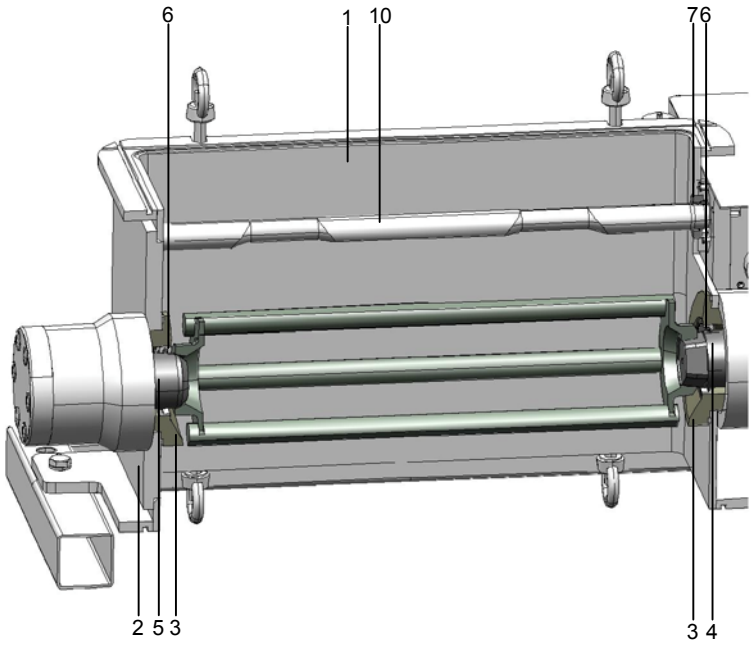


| Pos. | Description / Bezeichnung / Description | Quantité Menge Quantity | Montage avec berceau rigide Ausführung mit Stützwanne Execution with rigid screen | Montage avec treillis à tension direct Ausführung mit Siebspanner Execution with sieve |
|---|---|---|---|---|
| 1 | Bâti / Gehäuse / Housing | 1 | 2'802 cm2 | 2'802 cm2 |
| 2 | Porte / Fronttüre / Door | 1 | 577 cm2 | 577 cm2 |
| 3 | Flasque / Flansch / Flange | 2 | 270 cm2 | 270 cm2 |
| 4 | Palier fixe / Welle Fix / Fixed bearing | 1 | 30 cm2 | 30 cm2 |
| 5 | Palier mobile / Welle Mobil / Mobile bearing | 1 | 43 cm2 | 43 cm2 |
| 6 | Joint palier / Wellendichtung / Seal | 2 | 40 cm2 | 40 cm2 |
| 7 | Joint tendeurs / Dichtung Spanner / Lifting device seal | 2 | 16 cm2 | 16 cm2 |
| 8 | Déflecteur / Leitblech / Sheet deflector | 2 | 1'118 cm2 | 1'118 cm2 |
| 9 | Rotor / Rotor / Rotor | 1 | 1'065 cm2 | 1'065 cm2 |
| 10 | Tendeur / Spanner / Lifting device | 2 | 352 cm2 | 670 cm2 |
| 11 | Berceau rigide / Stützwanne / Rigid screen support | 1 | 1'866 cm2 | N.A. cm2 |
| 12 | Liste de fixation / Klemmleiste / Holding rods | 2 | 208 cm2 | N.A. cm2 |
| | **TOTAL cm2** | | **8'387 cm2** | **6'631 cm2** |



Professional Milling and Handling of Powders

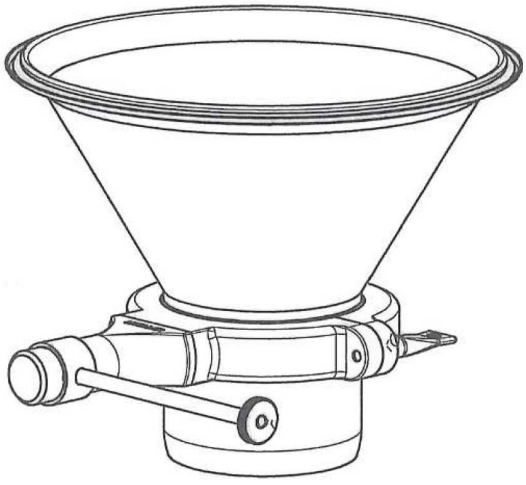

Funel 438420

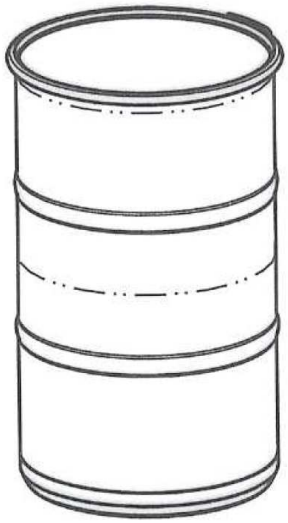

Barrel 461236

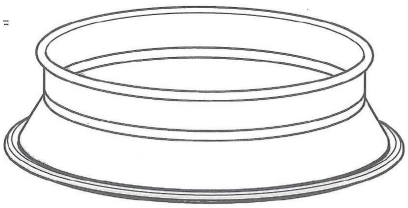

Tube 461512

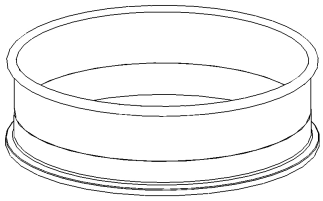

Funel 465220

| Pos. | Description / Bezeichnung / Description | Quantité Menge Quantity | Surface/cm$^2$ Fläche Area |
|---|---|---|---|
| 1 | 438420: Funel | 1 | 2693.8 |
| 2 | 461236 : Barrel | 1 | 9638.4 |
| 3 | 461512 : Tube | 1 | 1193 |
| 3 | 465220 : Funel | 1 | 585.1 |
| | | **Total cm$^2$** | **14110.3** |

Professional Milling and Handling of Powders

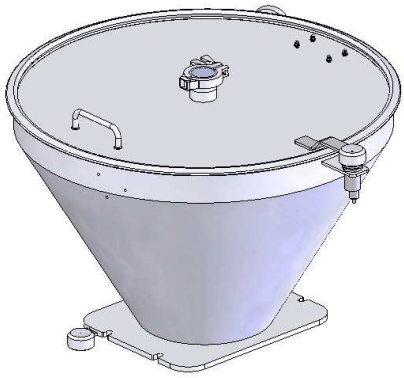

Inlet funel 465211

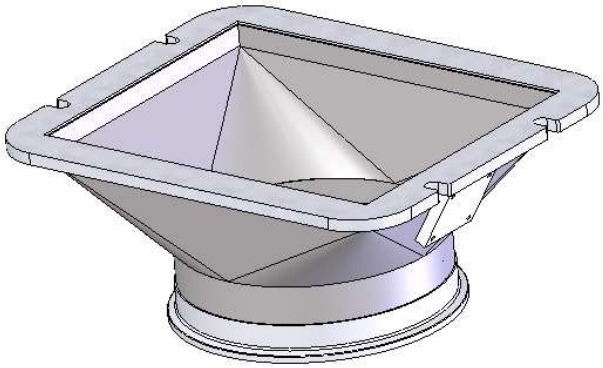

Outlet funel 465173

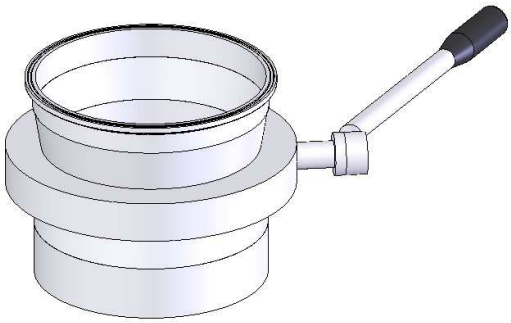

Valve 465174

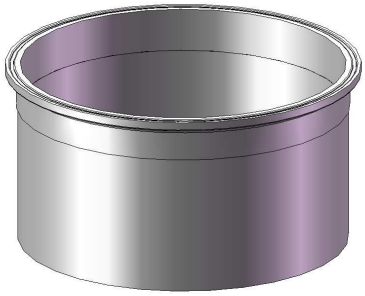

Funel 465165

| Pos. | Description / Bezeichnung / Description | Quantité Menge Quantity | Surface/cm$^2$ Fläche Area |
|---|---|---|---|
| 1 | 465211 : Inlet funel | 1 | 12352.4 |
| 1 | 465173 : Outlet funel | 1 | 1688.5 |
| 1 | 465174 : Valve | 1 | 2235.3 |
| 2 | 465165 : Funel | 1 | 806.4 |
| | | **Total cm$^2$** | **17082.6** |

Professional Milling and Handling of Powders

# MAINTENANCE AND SUPPORT

Professional Milling and Handling of Powders

**Liste des lubrifiants utilisés et tableau de graissage.**

**Liste der angewendeten Schmiermittel und Schmier-Anweisung**

**Instruction and list of used lubricants and lubrication chart**

| Roulement de bielle | Pleuellager | Connecting-rod bearing |
|---|---|---|
| M1-Q1-T1-F1-1-() | | |
| **Surfaces de friction** | **Gleitflächen** | **Frictions surfaces** |
| M3-Q4-T2-F2-() | | |
| **Réducteur** | **Stirnradgetriebe** | **Gearbox** |
| M2-Q2-T4-F3-2-(ISO VG 220 DIN 51519) | | |
| **Variateur** | **Verstellbares Getriebe** | **Variable speed drive** |
| M2-Q3-T3-F1-2-(ISO VG 32 DIN 51519) | | |

| | Mode de lubrification | Art der Schmierung | Type of lubrification |
|---|---|---|---|
| M1 | Garnissage de graisse | Fettpackung | Packed grease |
| M2 | Bain d'huile | Oelbad | Oil bath |
| M3 | Application de graisse | Schmieranwendung | Grease application |

| | Qualité | Qualität | Quality |
|---|---|---|---|
| Q1 | Graisse à roulements | Kugellagerfett | Beraing grease |
| Q2 | Huile | Getriebeöl | Gearbox oil |
| Q3 | Huile haute pression | Hochdrucköl | High pressure oil |
| Q4 | Pâte de montage | Montagepaste | Paste for assembly |

| | Type | Typ | Type |
|---|---|---|---|
| T1 | Klübersynth UH1 14-31 | | |
| T2 | Klüberpaste UH1 84-201 | | |
| T3 | Klüberoil 4UH1-32 N | | |
| T4 | Klüberoil 4UH1-220 N | | |

| | Fréquence [H] | Schmierfrequenz [H] | Frequency [H] |
|---|---|---|---|
| F1 | 2000 | | |
| F2 | 4000 | | |
| F3 | Lubrifié à vie | Immerwährende Einmalschmierung | Once for a life lubrication |

| | Quantité [cc] | Menge [cc] | Quantity [cc] |
|---|---|---|---|
| 1 | 10 | | |
| 2 | 500 | | |

| Information complémentaire | Zusatzinformation | Additional information |
|---|---|---|

**M2 - Q2 - T4 - F4 - 2 -** (ISO VG 220 DIN 51519)

Professional Milling and Handling of Powders

| | Position du reniflard et des vis de remplissage et de vidange d'huile. | Lage der Entlüftung, Öleinfüllschraube und Ölablass-Schraube. | Breather position, oil filling screw and drain plug. |
|---|---|---|---|
| STOP | Avant toute intervention, l'installation doit être arrêtée et l'alimentation électrique coupée.<br>Les risques de contamination par le produit doivent être écartés par l'utilisateur | Vor jeder Wartungsmaßnahme muss die Anlage ausgeschaltet und von der Stromversorgung getrennt werden.<br>Die Kontaminationsrisiken durch das Produkt müssen vom Benutzer beseitigt werden. | The plant must be turned off and the power and air pressure supplies disconnected before any maintenance work is commenced.<br>The user must eliminate any risk of product contamination. |
| ⚠ | Les réducteurs doivent être à température de fonctionnement. | Getriebe sollte betriebswarm sein. | Gearbox should be warm. |

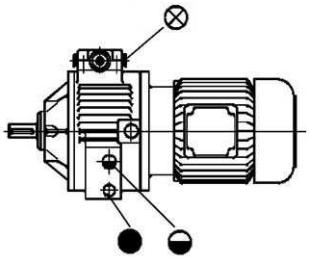

| | | | |
|---|---|---|---|
| ⊗ | Reniflard / vis de remplissage d'huile | Entlüftung / Öleinfüllschraube | Breathing / oil filler plug |
| ● | Vis de vidange d'huile | Ölablass-Schraube | Oil drain plug |
| ◒ | Voyant indicateur | Ölschauglas | Oil-control plug |

Professional Milling and Handling of Powders

## Pièces mécaniques / Mechanische Teile / Mecanical parts

| Désignation<br>Beschreibung<br>Description | Fréquence de contrôle<br>Kontrollhäufigkeit<br>Frequency of control | Recommandation de changement<br>Austauschempfehlung<br>Recommendation of change |
|---|---|---|
| Palier<br>Lager<br>Bearing | | ~ 5000 h |
| Etoile élastomère (1)<br>Stern des Kardansgelen (1)<br>Elastomer star (1) | A chaque démontage<br>Bei jeder Demontage<br>To each disassembly | Selon l'état<br>Je nach Abnützung<br>Depending on the condition |
| Cardan (2)<br>Kardanwelle (2)<br>Transmission (2) | | |
| Clamp<br>Klemme<br>Clamp | | |

## Joint / Dichtung / Seal

| Désignation<br>Beschreibung<br>Description | Fréquence de contrôle<br>Kontrollhäufigkeit<br>Frequency of control | Recommandation de changement<br>Austauschempfehlung<br>Recommendation of change |
|---|---|---|
| Joint à lèvres<br>Lippendichtung<br>Lip gasket | A chaque nettoyage<br>Nach jeder Reinigung<br>To each cleaning | ~ 1500 h |
| Joint plat<br>Flachdichtung<br>Flat gasket | | Selon l'état<br>Je nach Abnützung<br>Depending on the condition |
| Joint O-Ring<br>O-Ringdichtung<br>O-ring gasket | | |

## Outillage / Werkzeuge / Tools

| Désignation<br>Beschreibung<br>Description | Fréquence de contrôle<br>Kontrollhäufigkeit<br>Frequency of control | Recommandation de changement<br>Austauschempfehlung<br>Recommendation of change |
|---|---|---|
| Rotor | A chaque nettoyage<br>Nach jeder Reinigung<br>To each cleaning | Selon l'état<br>Je nach Abnützung<br>Depending on the condition |
| Tamis (3)<br>Siebtrommel (3)<br>Screen (3) | | |
| Râpe (3)<br>Raspeltrommel (3)<br>Grating (3) | | |
| Treillis (4)<br>Siebe (4)<br>Sieve (4) | | |

## Composants électriques / Elektrische Komponente / Electrical components

| Désignation<br>Beschreibung<br>Description | Fréquence de contrôle<br>Kontrollhäufigkeit<br>Frequency of control | Recommandation de changement<br>Austauschempfehlung<br>Recommendation of change |
|---|---|---|
| Sécurité (accessoire entrée/sortie)<br>Sicherheit (Einlauf/Auslaufsätze)<br>Security (inlet/outlet funnel) | 1 x par année<br>1 x pro Jahr<br>1 x per year | |
| Sécurité (porte) (5)<br>Sicherheit (Tür) (5)<br>Security (Door) (5) | | |
| Sonde température tamis (6)<br>Temperaturfühler (6)<br>Temperature sensor (6) | | |

## Graissage / Schmierung / Lubrication

Selon chapitre 7 – Tableau de graissage
Gemäss Kapitel 7 – Schmiertabelle
According chapter 7 – Lubricating chart

**Valable seulement pour / Gültig nur für / Valid only for**

(1) ConiWitt, HammerWitt-Lab, TurboWitt
(2) MFH
(3) ConiWitt, TurboWitt
(4) MF, MFH
(5) MF, MFH, HammerWitt-Lab
(6) ConiWitt

## Conditions spéciales " X"

L'utilisateur final est tenu de respecter le plan de maintenance délivré par le fabricant

## Replacement of mobile bearing seals

STOP

Before each intervention, installation should be stopped and electric and pneumatic supplies disconnected. Contamination risks due to product should be averted by user

- Disassemble tools according to Chapter 5- Tools disassembling
- Disconnect gas supply and remove the connection (A) of the installation with bearings purge
- Remove the screw caps (B)
- Unscrew the screws (C)

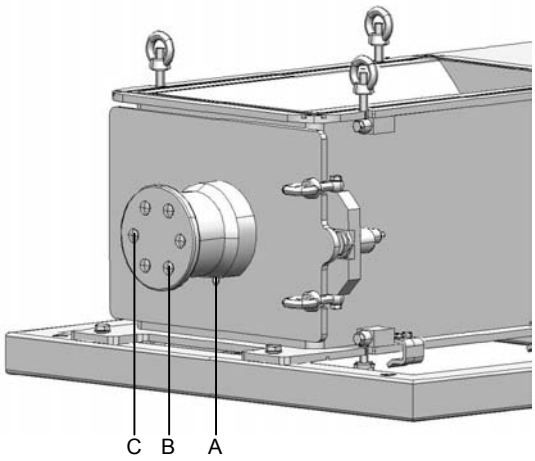


- Draw the bearing (D) while holding the bearing flange (E) inside the door
- Remove the bearing flange (E) from the door

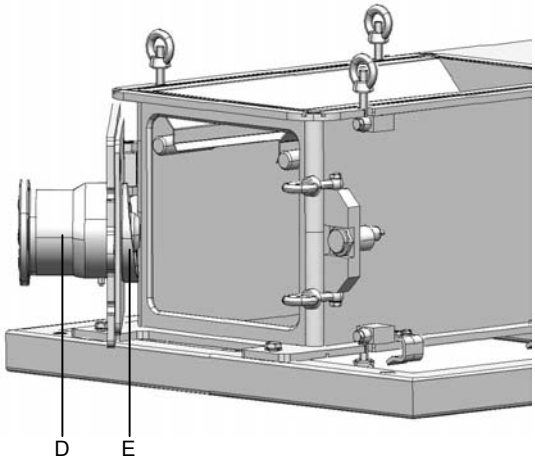


- Remove the flat gasket (F) of the bearing flange (E)
- With the help of a press and a suitable casing, drive the lip seal(G) outside the bearing flange (E)

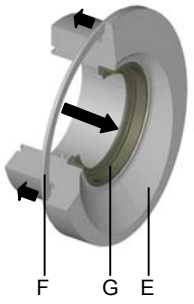


- Lubricate surfaces of the bearing flange (E) where the new seal will be placed
- Place the new seal (G) according to detail
- For installations with the option without bearing purge : With the help of a press and a suitable casing, drive the lip seal (G) into the bearing flange (E) until it comes flush with the bearing flange
- For installations with the option bearing purge: With the help of a press and a suitable casing, to drive the lip seal (G) into the bearing flange (E) until stop position
- Re-establish the flat gasket (F) on the bearing flange (E)

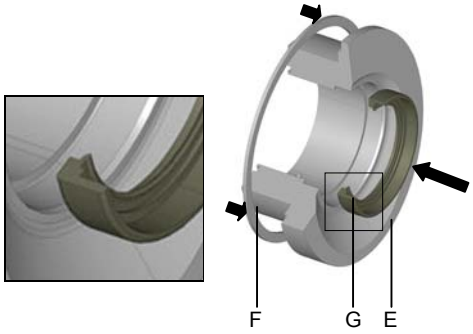




Professional Milling and Handling of Powders

- Check out the presence and status of seals
- Place the bearing flange (E) on the door
- Lubricate the axis surfaces (H)
- Place the bearing (D) carefully to avoid damages on the lip seal
- Direct the bearing (D) and bearing flange (E) correctly
- Tighten the screws of the bearing (C) to the torque according to Chapter 7- Tightening torques
- Re-establish the screw caps (B)
- Attach the connection (A) and reconnect the gas supply for installation with bearings purge
- Reassemble tools according to Chapter 5- Tools assembly

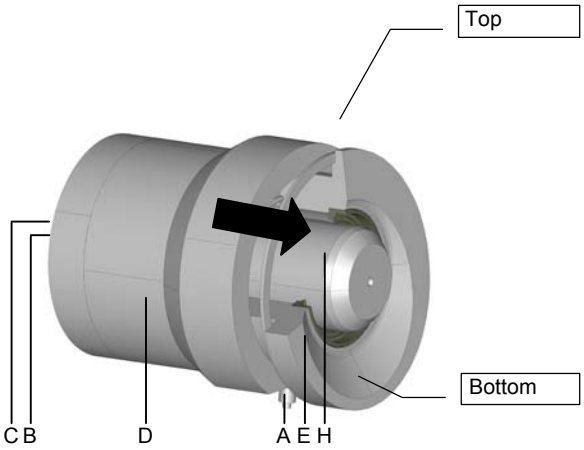


## Replacement of bearings on mobile bearing

Bearings are assumed to operate without maintenance during machine's life time. If the bearings should be replaced, please contact after-sales service of Frewitt.

## Replacement of seals on fix bearing

STOP

Before each intervention, installation should be stopped and electric and pneumatic supplies disconnected. Contamination risks due to product should be averted by user

- Disassemble tools according to Chapter 5- Tools disassembly
- Open drive protective cover (I)
- Disconnect the gas supply and the connection (A) of installations with bearings purge option
- Loosen the fixing screw (J)

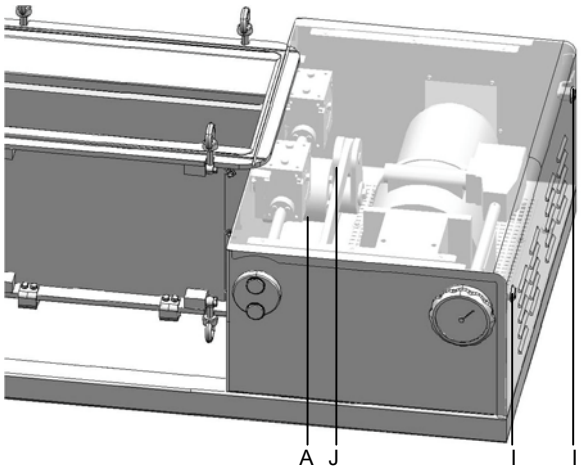


- Put a spacer (K) between the lever (L) and the sizing chamber
- Drive the axis (M) outside
- Remove the drive rod (N) of the lever (L)
- Unscrew the screw and remove the washer (O)
- Draw the lever (L) completely forwards
- Unscrew the bearing's screws (C)

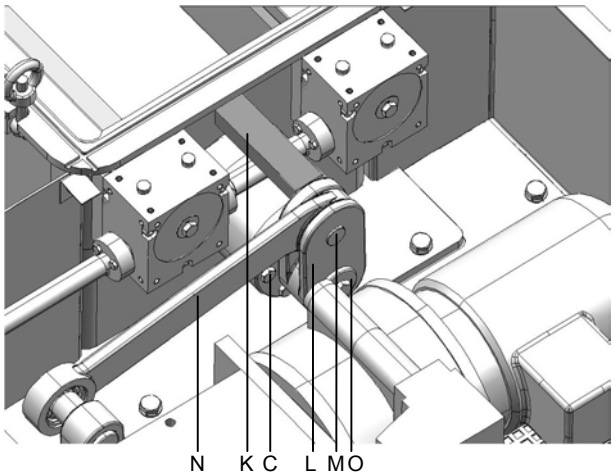


Professional Milling and Handling of Powders

- Draw the bearing (D) while holding the bearing flange (E) within the sizing chamber.
- Remove the bearing flange (E) from the sizing chamber

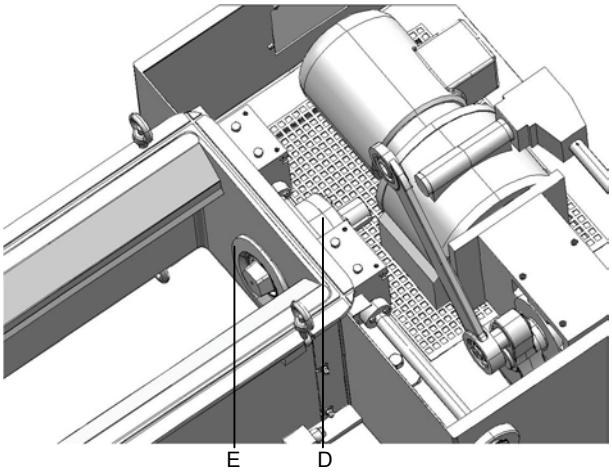


- Remove the flat gasket (F) of the bearing flange (E)
- With the help of a press and a suitable casing, drive the lip seal (G) outside the bearing flange (E)

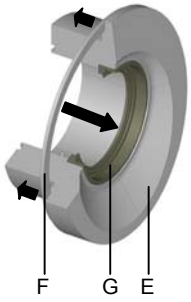


- Lubricate surfaces of the bearing flange (E) where the new seal will be fit
- Place the new seal (G)
- For installations with the option without bearing purge: With the help of a press and a suitable casing, drive the lip seal (G) into the bearing flange (E) until it comes flush with the bearing flange
- For installations with the option with bearing purge: With the help of a press and a suitable casing, drive the lip seal (G) inside the bearing flange (E) until stop position
- Re-establish the flat gasket (F) on the bearing flange (E)
- Check the presence and status of the seals
- Replace the bearing flange (E) on the sizing chamber
- Lubricate the axis surfaces (H)
- Replace the bearing (D) carefully to avoid damages on the lip seal
- Direct the bearing (D) and bearing flange (E) correctly
- Tighten the screws of the bearing (C) to the torque according to Chapter 7-Tighten torques

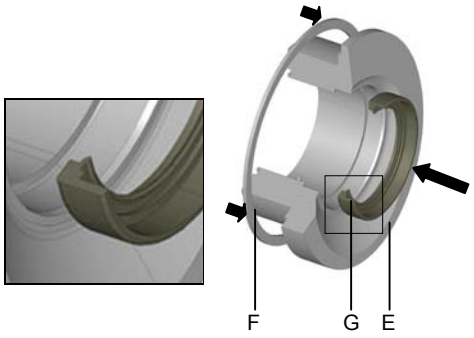


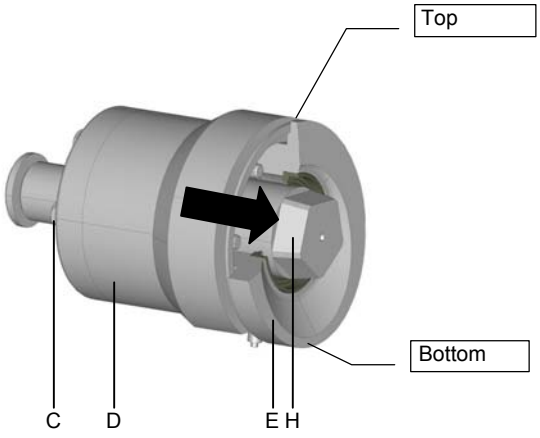


Professional Milling and Handling of Powders

- Reassemble the lever (L), washer and screw (O) with the torque according to Chapter 7- tightening torques
- Control the bearing of the drive rod (N), change it if necessary.
- Put a spacer (K) between the lever (L) and the sizing chamber
- Lead the axis (M) in the lever (L) and the drive rod (N).

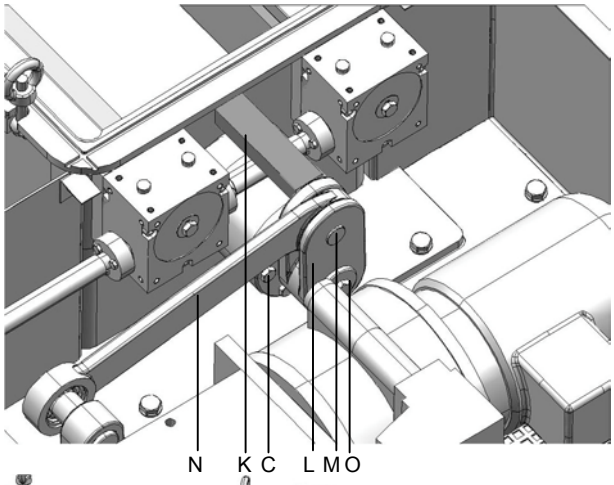


- Screw the fixing screw (J)
- Connect the gas supply and the connection (A) of installations with the bearings purge option
- Close the drive protective cover (I).
- Reassemble the tools according to Chapter 5- Tools assembly

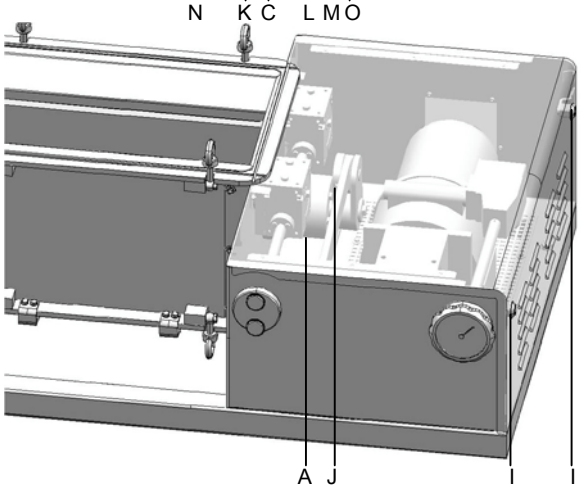


## Replacement of bearings on fix bearing

Bearings are assumed to operate without maintenance for the machine's life time. If the bearings should be replaced, please contact after-sales service of Frewitt.

## Replacement of seals on tensioning elements

Before each intervention, installation should be stopped and electric and pneumatic supplies disconnected. Contamination risks due to product should be averted by user

- Disassemble funnels according to Chapter 5- Inlet-outlet funnels disassembly
- Disassemble tools according to Chapter 5- Tools disassembly
- Graduate the distance rotor/screen-support (P) on position A4
- Disassemble deflectors (Q)
- Disassemble tensioning elements according to Chapter 5- Change of tensioning elements
- Unscrew the screws (R) and the circlips of the distance indicator rotor/screen-support (P)
- Unscrew the screws (S) of the extension (T)
- Unscrew the screws (U) of the gear-boxes (V)
- Remove the gear-boxes (V) while ensuring the intermediate axis does not turn (W)

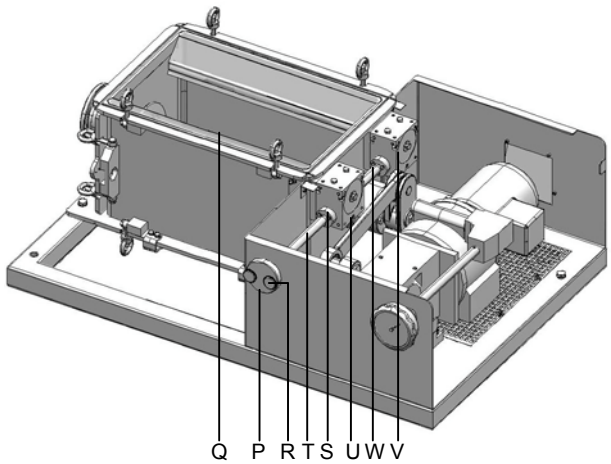


Professional Milling and Handling of Powders

- Using an adapted casing, drive the lip seal (X) out

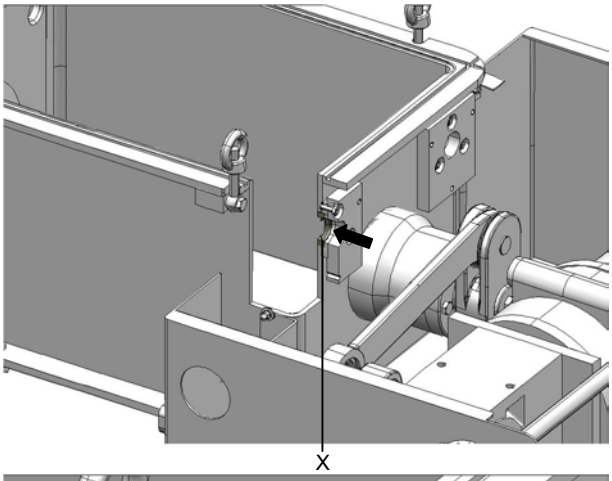


- Lubricate the surfaces of the new seal (X)
- Place the new seal (X) according to the detail
- Drive the new seal (X) inside until stop position

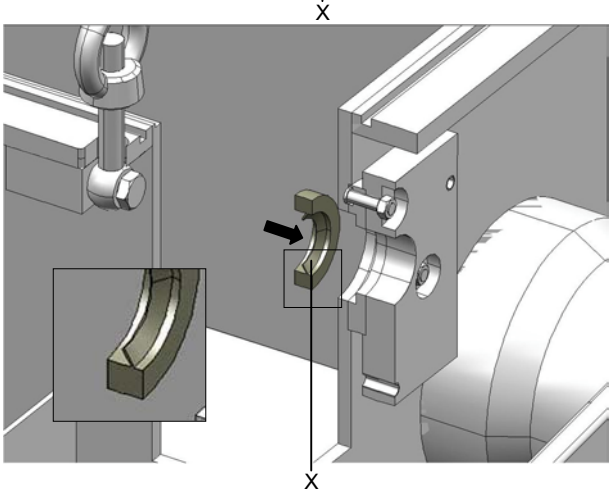


- Re-establish the gear-boxes (V) while ensuring that the intermediate axis does not turn (W)
- Assemble tensioning elements according to Chapter 5- Change of tensioning elements
- Ensure that flat top is directed upwards and horizontally. Place a fitting piece to check it.
- Screw the screws (U) of the gear boxes (V)
- Assemble the extension (T), without screwing the screws (S)
- Assemble the rotor/screen-support distance indicator (P) and the circlips without screwing the screws.
- Ensure that flat top is directed upwards and horizontally. Place a fitting piece to check it.
- Graduate the distance rotor/screen-support (P) on position A4
- Tighten the screws (S) of the extension (T)
- Tighten the screws R) of rotor/screen-support distance indicator
- Assemble deflectors (Q)
- Reassemble tools according to Chapter 5- Tools assembly

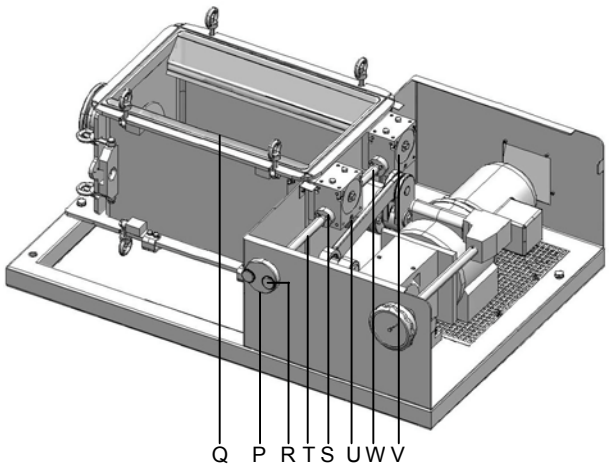


## Spare parts

The list of spare parts can be found in Chapter 8 -Spare parts. All the spare parts should be original from Frewitt.



Professional Milling and Handling of Powders

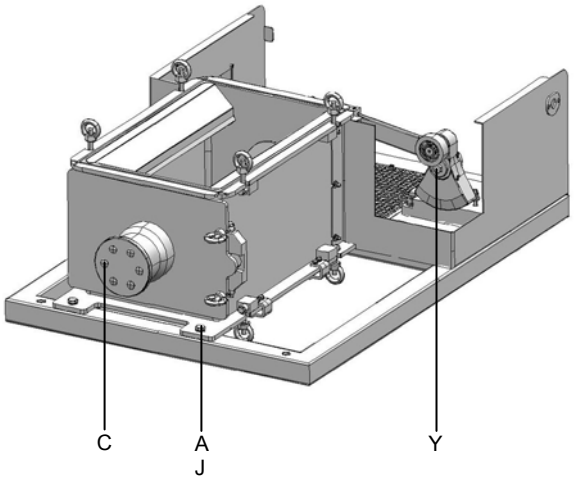


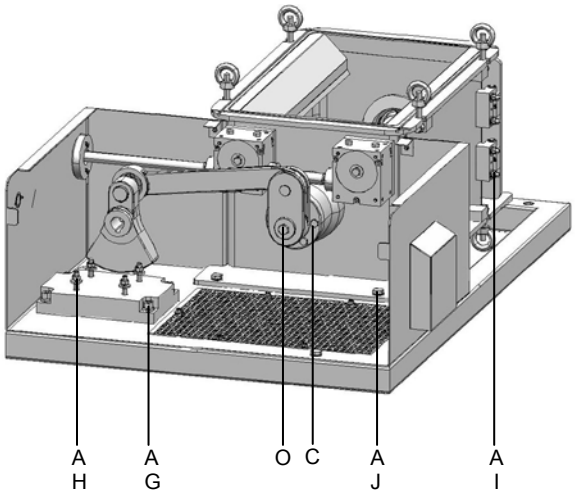


| | MF-3 | MF-6 | MF-8 | 2MF-8 | Remarques / Bemerkung / Remarks |
|---|---|---|---|---|---|
| C | 21.4 Nm | 21.4 Nm | 21.4 Nm | 21.4 Nm | Graisser / Einfetten / Grease |
| O | 44.0 Nm | 44.0 Nm | 44.0 Nm | 44.0 Nm | Coller / Kleben / Stick Loctite 243 |
| AG | 44.0 Nm | 44.0 Nm | 44.0 Nm | | Coller / Kleben / Stick Loctite 243 |
| AH | 31.8 Nm | 31.8 Nm | 63.0 Nm | 183.0 Nm | Graisser / Einfetten / Grease |
| AI | 8.8 Nm | 8.8 Nm | 8.8 Nm | 8.8 Nm | |
| AJ | 44.0 Nm | 44.0 Nm | 44.0 Nm | 74.0 Nm | Coller / Kleben / Stick Loctite 243 |
| Y | 44.0 Nm | 44.0 Nm | 44.0 Nm | 183.0 Nm | Coller / Kleben / Stick Loctite 243 |

Pour les installations avec des joints en PTFE (FEP-O-SEAL), il faut serrer une première fois au couple. Attendre 10min. et resserrer une nouvelle fois au couple jusqu'à ce que la clé dynamométrique déclenche instantanément.

Installationen mit Dichtungen aus PTFE (FEP-O-SEAL), müssen das erste Mal mit einem Drehmomentschlüssel angezogen werden. Nach 10 Minuten nochmals wiederholen, bis dass sich der Dynamoschlüssel sofort auslöst.

Installations with PTFE (FEP-O-SEAL) seals have to be scwewed the first time with a tightening torque. Wait 10 minutes and tight again until the dynamometric key is activated immediately.

**Ajustage de la position maximum du volant à la vitesse maximum du moteur :**

**Anpassung der maximalen Position des Handrades an die Höchstgeschwindigkeit des Motors:**

**Adjustment of the maximum position of the wheel on the drive at the maximum speed :**

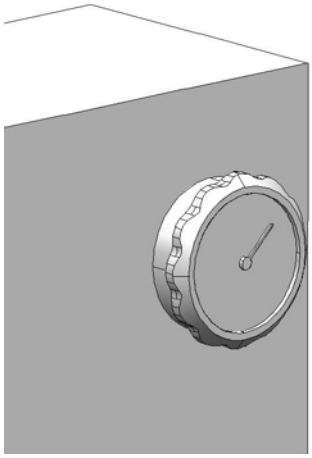

1. Enclencher la machine à la vitesse maximum
2. Desserrer la vis imbus sur la partie arrière du volant
3. Tourner l'indicateur de façon à aligner la valeur maximale avec l'aiguille
4. Resserrer la vis imbus sur la partie arrière du volant

1. Die Maschine mit Höchstgeschwindigkeit einschalten
2. Die Inbus-Schraube auf der Rückseite des Handrades lösen
3. Das Handrad so drehen, dass der maximale Wert mit der Nadel übereinstimmt
4. Die Inbus-Schraube auf der Rückseite des Handrades wieder anziehen

1. Put the machine into operation at maximum speed
2. Loosen the screw on the back side of the wheel
3. Turn the wheel until the maximum value is aligned with the needle
4. Tighten the screw on the back side of the wheel

Professional Milling and Handling of Powders

## Transformation of oscillating to rotary installation

Before each intervention, installation should be stopped and electric and pneumatic supplies disconnected. Contamination risks due to product should be averted by user

- Disassemble tools according to Chapter 5- Tools disassembly
- Open drive protective cover (I)
- Loosen the fixing screw (J)

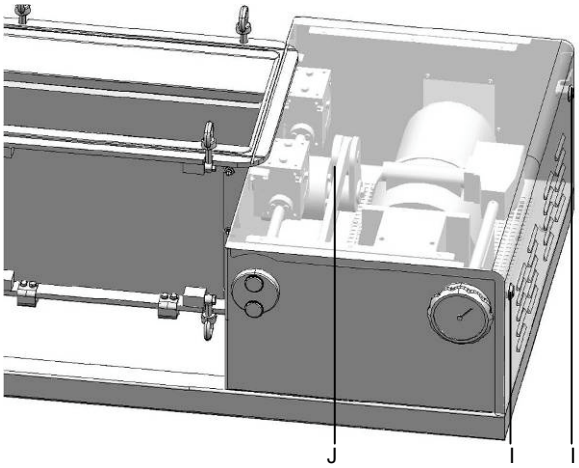


- Put a spacer (K) between the lever (L) and the sizing chamber
- Drive the axis (M) out.
- Remove the drive rod (N) of the lever(L)
- Unscrew the screw and remove the washer (O)
- Remove the bearing lever (L)

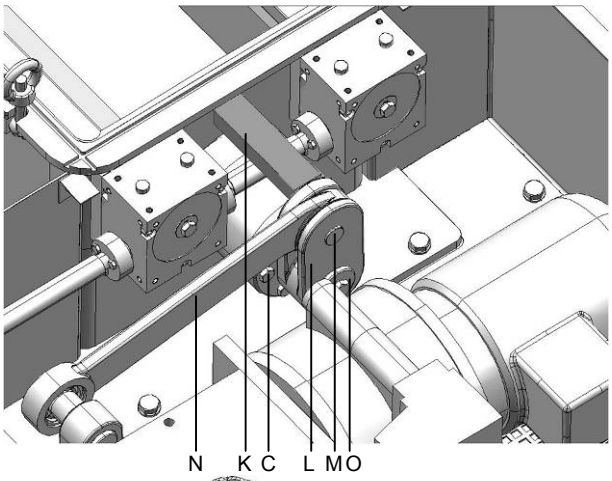


- Unscrew the screw and remove the washer (Y)
- Remove the crank (Z)

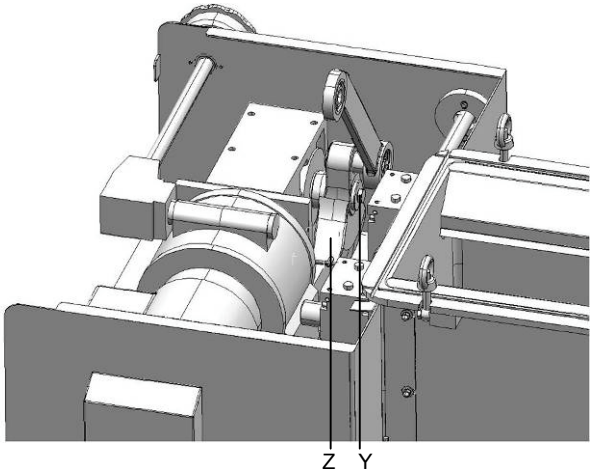


Professional Milling and Handling of Powders

- Clean and lubricate the surfaces of the motor shaft
- Assemble pulley (AA) on the motor by fixing it with the washer and the screw and tightening it with the torque according to Chapter 7- tightening torques
- Assemble pulley (AB) on the fix bearing by fixing it with the washer and the screw and tightening it to the torque according to Chapter 7-Tightening torques
- Assemble the belt (AC)
- Assemble tensioning element (AD) by securing it with the washers and the nuts
- Tighten the belt (AC) while turning eccentric roller (AE) according to the belt tension form herein attached
- Tighten screw (AF) of the eccentric roller
- Close drive protective cover (I)

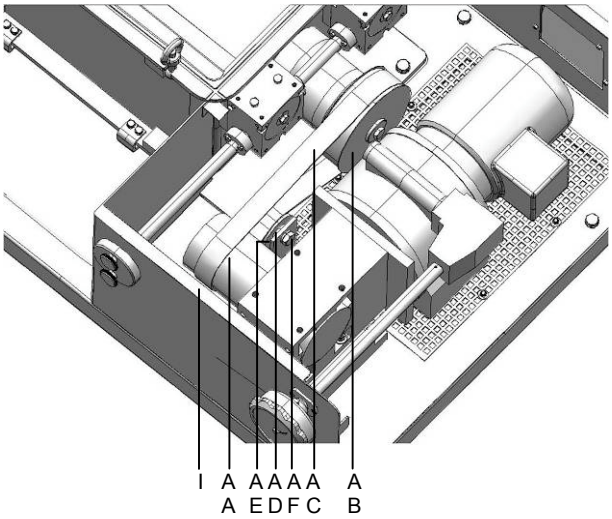


## Spare parts

The list of spare parts can be found in Chapter 8- Spare parts. All the spare parts should be original from Frewitt.

Professional Milling and Handling of Powders

| | |
|---|---|
| **Object:** | **PR electronic A/S 4-20 mA LCD Indicator, Typ 5531 Art. Nr.: 429506** |
| **Installation:** | **MF-3, Novartis** |
| **Serial Nr.:** | **10007821034** |
| **Project Nr.:** | **PRO-10-0078** |
| **Date; Visa:** | **30.08.2011,CRE** |

## Programming (DP1, Front Keyboard)

| | ON | OFF | SELECTION |
|---|---|---|---|
| **Keys locked** | **-** | **1** | **X** |
| **Keys not locked** | **1** | **-** | |

## Programming (DP1, Backlight)

| | ON | OFF | SELECTION |
|---|---|---|---|
| **Without backlight** | **2** | **-** | |
| **50 % Intensity** | **3** | **2** | **X** |
| **100 % Intensity** | **-** | **2 & 3** | |

## Routing diagram

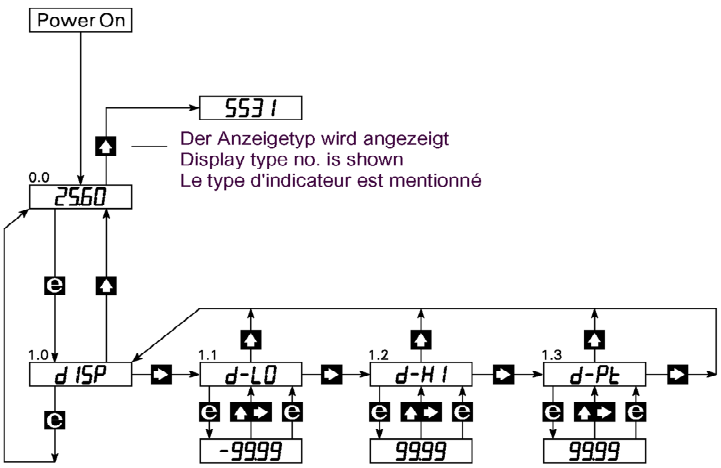


| | |
|---|---|
| **d-LO** | **0** |
| **d-HI** | **300** |
| **d-PT** | **0000** |

DP 1 SW 1 must be ON to enable front buttons. If no buttons are pressed for a period of two minutes, display returns to stage 0.0.
To store changes press Ø Ł simultaneously

Professional Milling and Handling of Powders

| | |
|---|---|
| **Object:** | **Frequency Converter KFU8-UFC-Ex1.d; Item 417735; Pepperl & Fuchs** |
| **Installation:** | **MF-3, Novartis** |
| **Serial Nr.:** | **10007821034** |
| **Project Nr.:** | **PRO-10-0078** |
| **Date; visa:** | **30.08.2011,CRE** |

## Programming

**6 Menu overview, using the control panel for parameter assignment**

The following illustration should help give you a quick orientation if you are already familiar with how to use the control panel for parameter assignment. For a detailed description, please refer to the instructions in chapter 7.

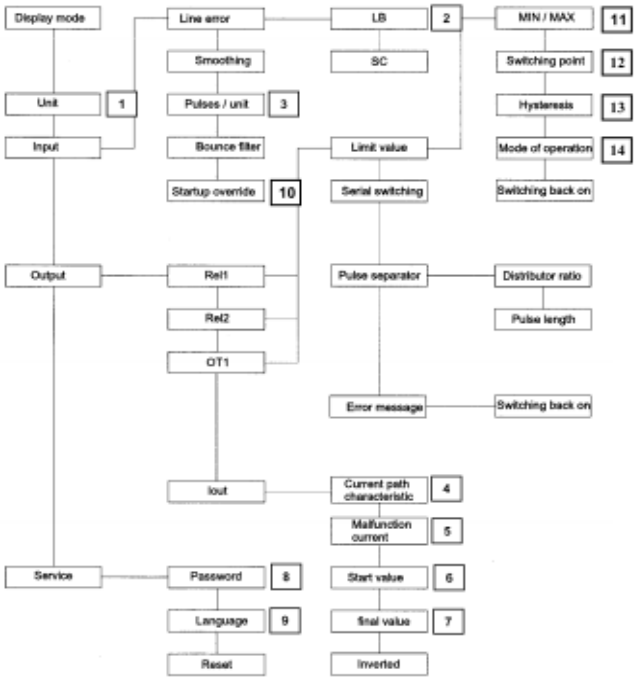


| Nr. | Name | Selection |
|---|---|---|
| 01 | Unit | RPM |
| 02 | LB | ON |
| 03 | Pulses / unit | 1 |
| 04 | Current path characteristic | 4 - 20 mA |
| 05 | Malfunction current | Hold |
| 06 | Start value | 0 |
| 07 | Final value | 300 |
| 08 | Password | 1234 |
| 09 | Language | E |
| 10 | Startup override | d |
| 11 | min / max | |
| 12 | Switching point | |
| 13 | Hysteresis | |
| 14 | Mode of operation | |

Professional Milling and Handling of Powders

FREWITT

# Varmeca 30

**N° mach. :** 10007821034 | **N° motor :** 317273 G11

**Customer:** **PRO-10-0078,MF-3, Novartis**

| Code | | Function | S | | MFH |
|---|---|---|---|---|---|
| 1.07 | : | Reference mini. | : | : | 423 U/min |
| 1.06 | : | Reference maxi. | : | : | 2458 U/min |
| 2.11 | : | Accel. Rate 1 | : | : | 1.1 s/kmin |
| 2.21 | : | Decel. Rate 1 | : | : | 1.1 s/kmin |
| 0.66 | : | passw. | : | : | |

## Advanced Parameters :

code 01974 / 00149 / 0055

| | | | | | |
|---|---|---|---|---|---|
| 2.04 | : | **Ramp mode select** | : 0 | : | Fixed ramp |
| 7.02 | : | **ADI2 mode** | : 1 | : | digital inputs |
| 7.15 | : | **ADIO3 mode** | : 10 | : | 0-10V output |
| 7.16 | : | **ADIO3 scaling** | : | : | 02.00 |
| 7.18 | : | **ADIO3 output source** | : | : | 0504 |
| 8.17 | : | **invert output signal** | : 1 | : | invert |
| 8.22 | : | **Destin. Input DI2** | : | : | 6.32 / REV |
| 8.23 | : | **Destin. Input DI3** | : | : | 6.30 / FWD |

## Motor Parameters :

**change only if not Integral Motor but control befor Start up**

code 0055

| | | | | | |
|---|---|---|---|---|---|
| 5.07 | : | A motor | : | : | 2.3 |
| 5.08 | : | Rpm | : | : | 1430 |
| 5.09 | : | V motor | : | : | 400 |
| 5.10 | : | cos phi | : | : | 0.84 |
| 5.06 | : | Hz | : | : | 50 |
| 5.12 | : | Autocalibrage | : 1 | : | No rotation |
| 11.43 | : | Parametre usine | : 1 | : | before configures the drive |

# SPARE PARTS

Professional Milling and Handling of Powders

**Client: Kunde: Customer:**
**NOVARTIS SINGAPORE PHARMACEUTICAL**
**SG-Singapore**

**N° Série: Serien-Nr. Serial Nr.**
11007821034

**465107**

| Article N° Artikel Nr. Article ID. | Description Beschreibung Description | Quantité Menge Quantity | Unité Einheit Unit | No Dessin Zeichnungs-Nr Drawing ID |
|---|---|---|---|---|
| . . 433239 | Joint | 2.0000 | Pce | 465117 |
| . . 450611 | Silicone seal transparent Ø 2/4x940, endless vulcanized, FDA | 1.0000 | Pce | 465117 |
| . . 405367 | Lip Seal 22/40x8 Gylon 2050-00215 | 2.0000 | Pce | 465117 |
| . 408448 | Sieve-G MS 0.50x0.25mm, frd MF-3, MG-314, MG-400, d=122, 1.4401 | 1.0000 | Pce | 465107 |
| . 465126 | Bearing (fixed) Al Inox, Ra0.4 | 1.0000 | Pce | 465107 |
| . . 402141 | Lip Seal 50/65x10 inox/gylon | 2.0000 | Pce | 465126 |
| . . 412612 | O-Ring 64.77x2.62 EPDM 75.5 | 1.0000 | Pce | 465126 |
| . . 414955 | Flat seal rd 119/109x2, silicone, FDA, DT 30 0854 0246 | 1.0000 | Pce | 465126 |
| . . 404392 | Seal RWDR 45/62x8 N | 1.0000 | Pce | 465126 |
| . 465076 | Mobile Bearing , inox, Ra0.4 | 1.0000 | Pce | 465107 |
| . . 402204 | Ball Bearing 20/47x14 6204-RS | 1.0000 | Pce | 429599 |
| . . 402206 | Ball Bearing 20/47x14 1204E | 1.0000 | Pce | 429599 |
| . 401402 | Rotor 5 Arm 1x5p, 122x221 MG-336, MF-3, MG-314 | 1.0000 | Pce | 465107 |
| . 423856 | Clamp seal DN200, EPDM, ID213.3, A233.5 | 1.0000 | Pce | 465107 |
| . . 427424 | O-Ring 23.47x2.62 EPDM 75.5/KW75 HITEC | 2.0000 | Pce | 465214 |
| . . 417313 | Clamping seal DN25 EPDM ID 29.7 A50.5 | 2.0000 | Pce | 465214 |
| . . 410990 | Seal D710x9, silicone | 1.0000 | Pce | 465211 |
| . . 409290 | Clamp Seal DN 50 silicone | 2.0000 | Pce | 465211 |

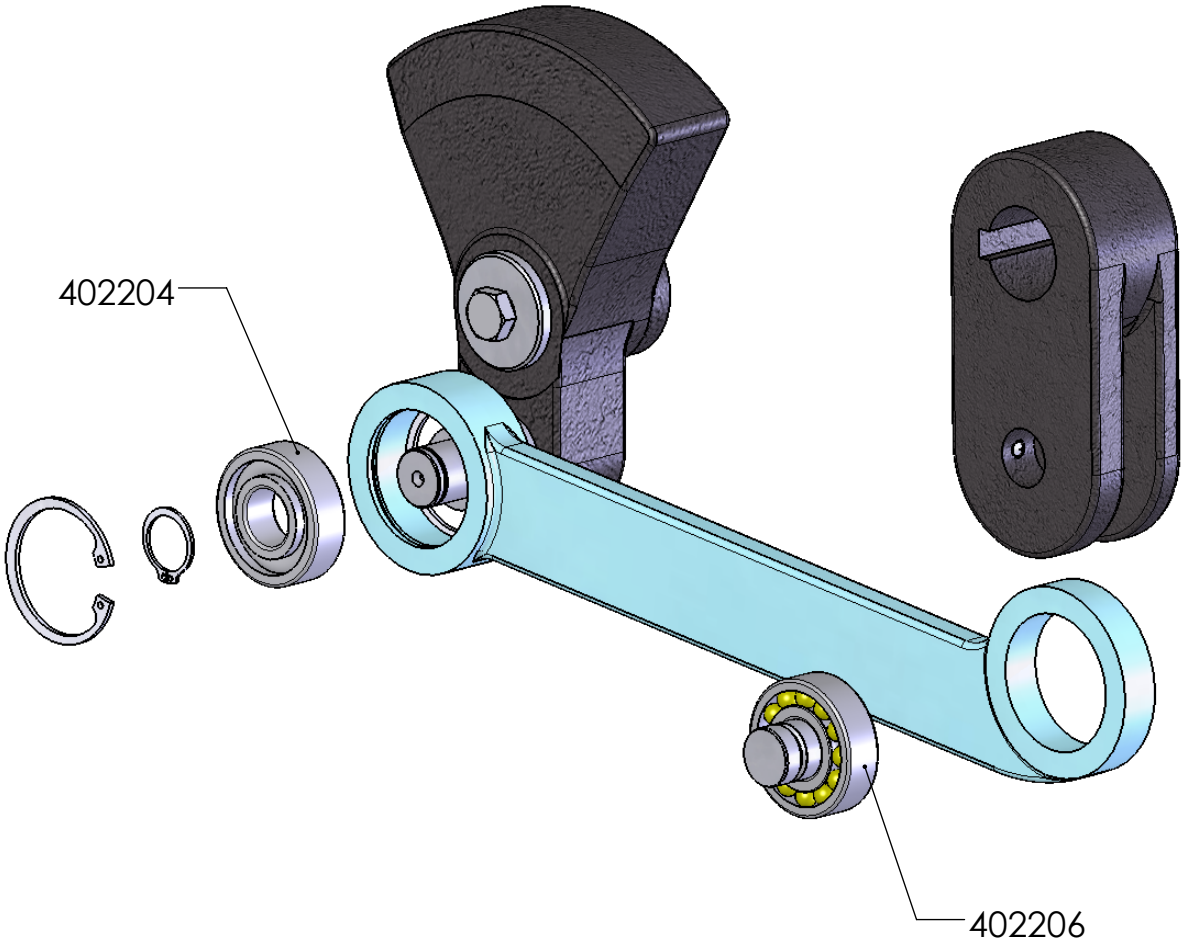


| Dimensions without tolerance [mm] | above | | 6 | 30 | 120 | 400 | 1000 |
|---|---|---|---|---|---|---|---|
| | up to | 6 | 30 | 120 | 400 | 1000 | 2000 |
| Machining: ISO 2768-m | | ±0.10 | ±0.20 | ±0.30 | ±0.50 | ±0.80 | ±1.20 |
| Welding Assembly: ISO 2768-c | | ±0.30 | ±0.50 | ±0.80 | ±1.20 | ±2.00 | ±3.00 |

MATERIAL : Matériau <non spécifié>

ENTRAÎNEMENT

| Scale | Similar | | | |
|---|---|---|---|---|
| % | | Designed | 25/02/2010 | wwi |
| | | Controlled | 25/02/2010 | wwi |
| | Weight [kg] | Revised | 25/02/2010 | wwi |
| A4 | 5.675 | Atex | | |

Any and all information received by you from us shall be held and kept confidential and shall not be disclosed by you to any third party except with prior written consent of FREWITT SA.

Frewitt SA: Milling and Handling of Powders
P.O.B. 615, CH-1701 Fribourg, SWITZERLAND
tel: +41 26 460 74 00 / fax: +41 26 460 74 01
info@frewitt.com / www.frewitt.com

429599-PRE

| Page | Ver. |
|---|---|
| 1/1 | A |

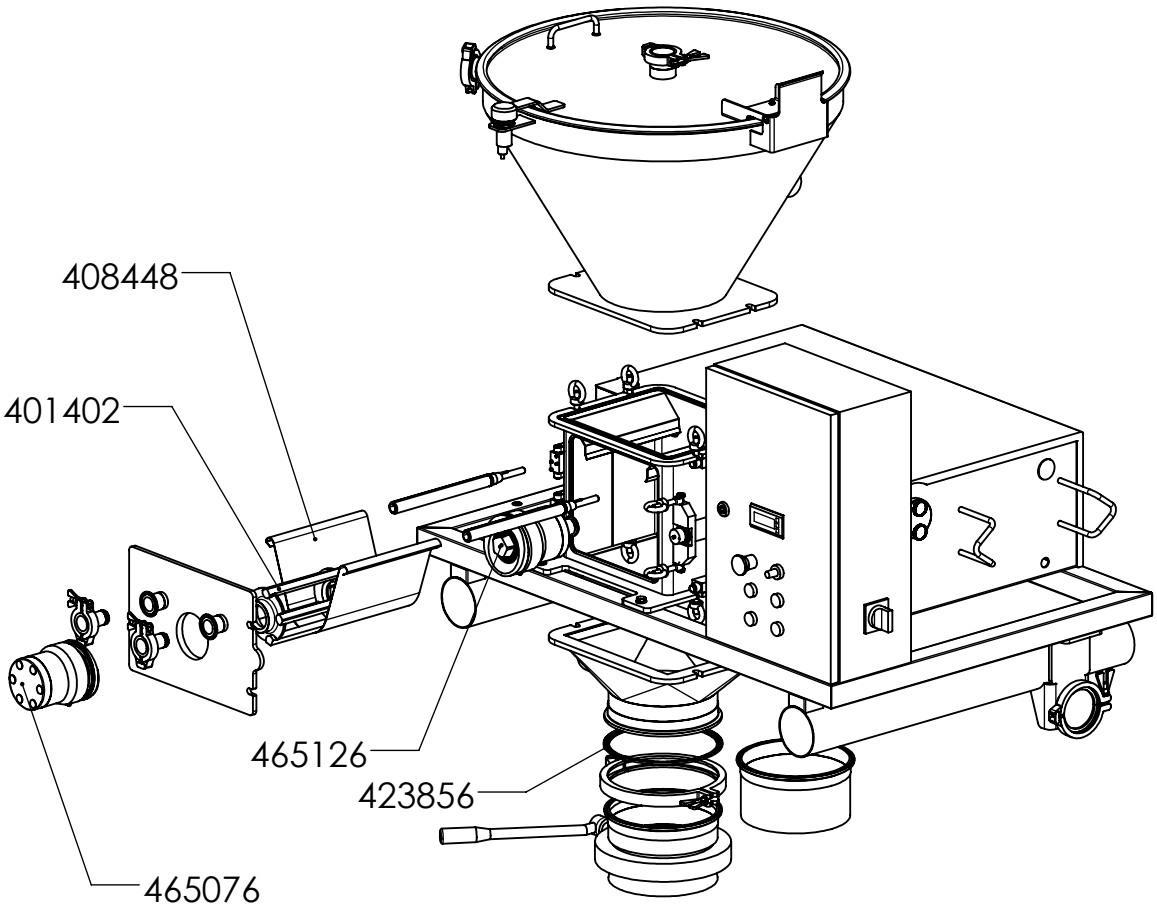


| Dimensions without tolerance [mm] | above | | 6 | 30 | 120 | 400 | 1000 |
|---|---|---|---|---|---|---|---|
| | up to | 6 | 30 | 120 | 400 | 1000 | 2000 |
| Machining: ISO 2768-m | | ±0.10 | ±0.20 | ±0.30 | ±0.50 | ±0.80 | ±1.20 |
| Welding Assembly: ISO 2768-c | | ±0.30 | ±0.50 | ±0.80 | ±1.20 | ±2.00 | ±3.00 |

MATERIAL : N/A

PRO-11-0078 / MF-3

| Scale | Similar | Designed | 10/06/2011 | thle |
|---|---|---|---|---|
| % | | Controlled | 22/07/2011 | thle |
| | Weight [kg] | Revised | 22/07/2011 | thle |
| A4 | N/A | Atex | | |

Any and all information received by you from us shall be held and kept confidential and shall not be disclosed by you to any third party except with prior written consent of FREWITT SA.

Frewitt SA: Milling and Handling of Powders
P.O.B. 615, CH-1701 Fribourg, SWITZERLAND
tel: +41 26 460 74 00 / fax: +41 26 460 74 01
info@frewitt.com / www.frewitt.com

# 465107-PRE

| Page | Ver. |
|---|---|
| 1/1 | A |

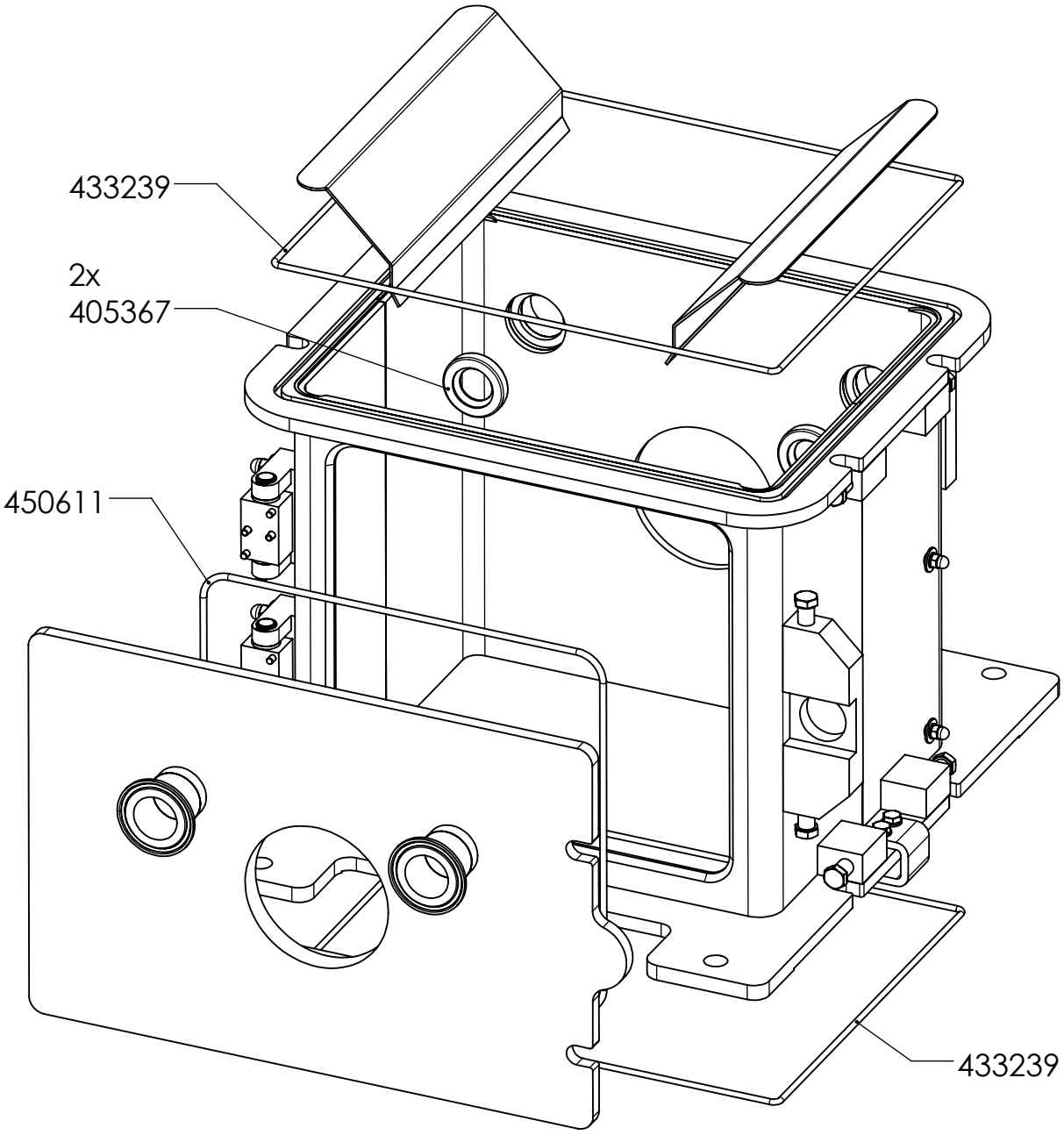


| | | | | | | | | |
|---|---|---|---|---|---|---|---|---|
| Dimensions without tolerance [mm] | above | | 6 | 30 | 120 | 400 | 1000 |
| | up to | 6 | 30 | 120 | 400 | 1000 | 2000 |
| Machining: ISO 2768-m | | ±0.10 | ±0.20 | ±0.30 | ±0.50 | ±0.80 | ±1.20 |
| Welding Assembly: ISO 2768-c | | ±0.30 | ±0.50 | ±0.80 | ±1.20 | ±2.00 | ±3.00 |

MATERIAL : N/A

Bâti complet

| Scale | Similar | | | |
|---|---|---|---|---|
| % | | Designed | 08/06/2011 | thle |
| | | Controlled | 08/06/2011 | thle |
| | Weight [kg] | Revised | 08/06/2011 | thle |
| A4 | 35.503 | Atex | | |

Any and all information received by you from us shall be held and kept confidential and shall not be disclosed by you to any third party except with prior written consent of FREWITT SA.

Frewitt SA: Milling and Handling of Powders
P.O.B. 615, CH-1701 Fribourg, SWITZERLAND
tel: +41 26 460 74 00 / fax: +41 26 460 74 01
info@frewitt.com / www.frewitt.com

465117-PRE

| Page | Ver. |
|---|---|
| 1/1 | A |

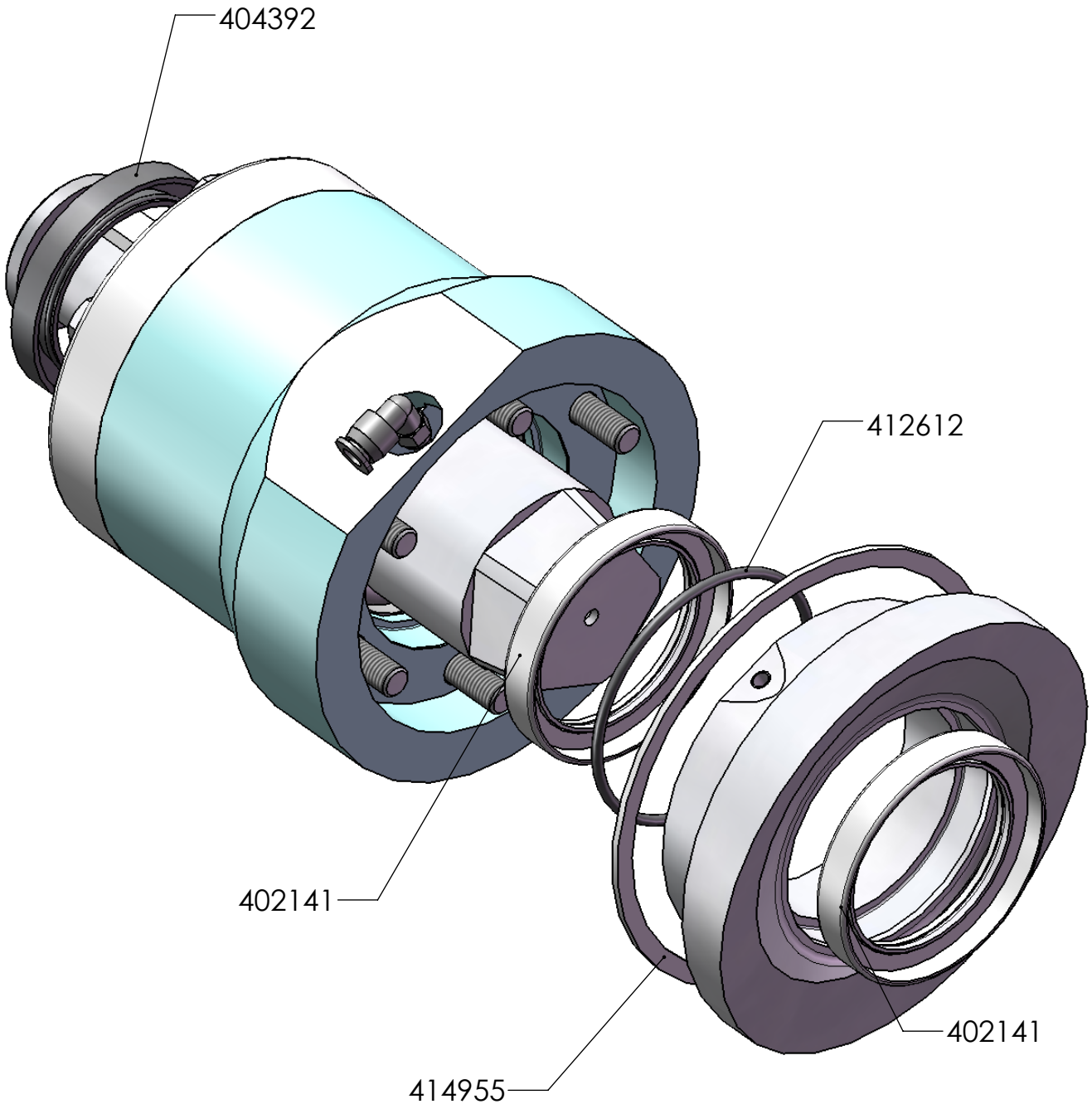


| Dimensions without tolerance [mm] | above | | 6 | 30 | 120 | 400 | 1000 |
|---|---|---|---|---|---|---|---|
| | up to | 6 | 30 | 120 | 400 | 1000 | 2000 |
| Machining: ISO 2768-m | | ±0.10 | ±0.20 | ±0.30 | ±0.50 | ±0.80 | ±1.20 |
| Welding Assembly: ISO 2768-c | | ±0.30 | ±0.50 | ±0.80 | ±1.20 | ±2.00 | ±3.00 |

MATERIAL :

PALIER FIXE AI

| Scale | Similar | | | |
|---|---|---|---|---|
| % | 443222 | Designed | 08/06/2011 | thle |
| | | Controlled | 08/06/2011 | thle |
| | Weight [kg] | Revised | 08/06/2011 | thle |
| A4 | 8.59 | Atex | | |

Any and all information received by you from us shall be held and kept confidential and shall not be disclosed by you to any third party except with prior written consent of FREWITT SA.

Frewitt SA: Milling and Handling of Powders
P.O.B. 615, CH-1701 Fribourg, SWITZERLAND
tel: +41 26 460 74 00 / fax: +41 26 460 74 01
info@frewitt.com / www.frewitt.com

465126-PRE

| Page | Ver. |
|---|---|
| 1/1 | A |

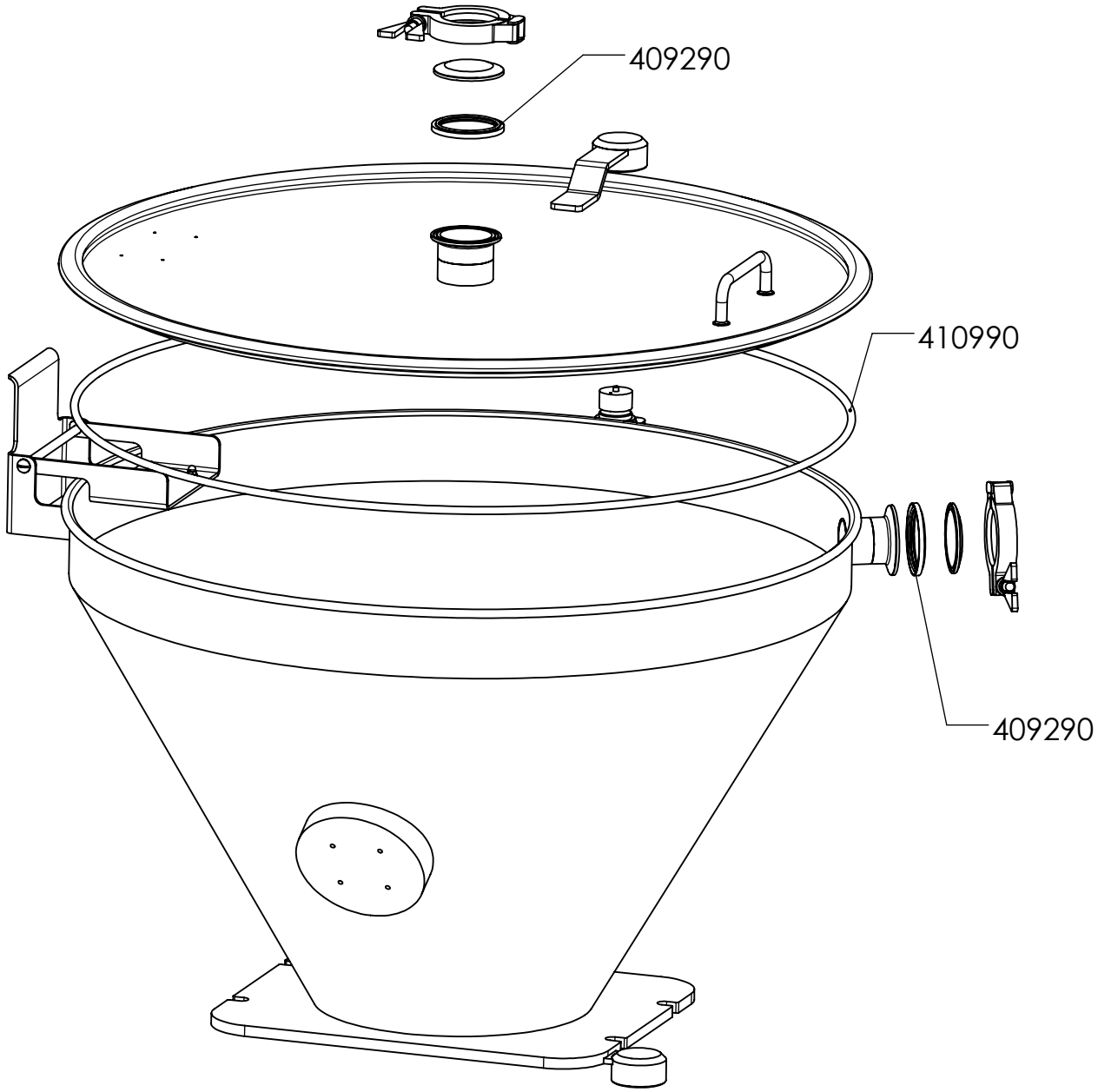


| Dimensions without tolerance [mm] | above | | 6 | 30 | 120 | 400 | 1000 |
|---|---|---|---|---|---|---|---|
| | up to | 6 | 30 | 120 | 400 | 1000 | 2000 |
| Machining: ISO 2768-m | | ±0.10 | ±0.20 | ±0.30 | ±0.50 | ±0.80 | ±1.20 |
| Welding Assembly: ISO 2768-c | | ±0.30 | ±0.50 | ±0.80 | ±1.20 | ±2.00 | ±3.00 |

MATERIAL :

| Scale | Similar | Designed | 09/06/2011 | thle |
|---|---|---|---|---|
| % | | Controlled | 06/07/2011 | thle |
| | Weight [kg] | Revised | 06/07/2011 | thle |
| A4 | 34.068 | Atex | | |

Entonnoir entrée

Any and all information received by you from us shall be held and kept confidential and shall not be disclosed by you to any third party except with prior written consent of FREWITT SA.

Frewitt SA: Milling and Handling of Powders
P.O.B. 615, CH-1701 Fribourg, SWITZERLAND
tel: +41 26 460 74 00 / fax: +41 26 460 74 01
info@frewitt.com / www.frewitt.com

| 465211-PRE | Page | Ver. |
|---|---|---|
| | 1/1 | A |

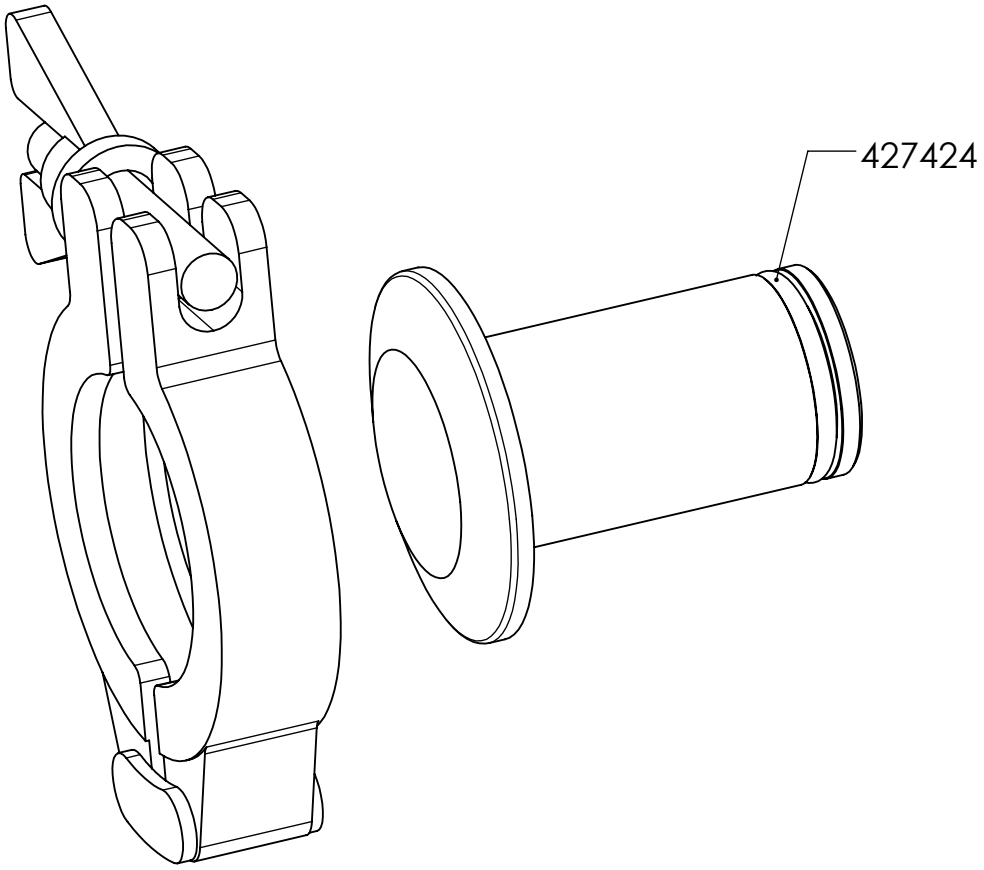


| Dimensions without tolerance [mm] | above | | 6 | 30 | 120 | 400 | 1000 |
|---|---|---|---|---|---|---|---|
| | up to | 6 | 30 | 120 | 400 | 1000 | 2000 |
| Machining: ISO 2768-m | | ±0.10 | ±0.20 | ±0.30 | ±0.50 | ±0.80 | ±1.20 |
| Welding Assembly: ISO 2768-c | | ±0.30 | ±0.50 | ±0.80 | ±1.20 | ±2.00 | ±3.00 |

MATERIAL : N/A

Ensemble bouchon de fermeture

| Scale | Similar | | | |
|---|---|---|---|---|
| % | | Designed | 08/06/2011 | thle |
| | | Controlled | 31/08/2011 | thle |
| | Weight [kg] | Revised | 31/08/2011 | thle |
| A4 | N/A | Atex | | |

Any and all information received by you from us shall be held and kept confidential and shall not be disclosed by you to any third party except with prior written consent of FREWITT SA.

Frewitt SA: Milling and Handling of Powders
P.O.B. 615, CH-1701 Fribourg, SWITZERLAND
tel: +41 26 460 74 00 / fax: +41 26 460 74 01
info@frewitt.com / www.frewitt.com

465214-PRE

| Page | Ver. |
|---|---|
| 1/1 | A |

Notre service d'après vente se tient volontiers à votre disposition pour les commandes et demandes d'offre. Vous pouvez nous contacter comme suit:

Für Bestellungen oder Preisanfragen für Ersatzteile steht Ihnen unser Kundendienst gerne zur Verfügung. Sie erreichen uns wie folgt :

Our After Sales Service is at your disposal for inquiries, purchase orders for spare parts as well as for any further information you request on your machine. Our contacts are as follows

Responsable Service après vente

Kundendienstleiter

Customer Service Manager

Tel: +41 26 460 74 37
Fax +41 26 460 74 07
E-mail: customerservice@frewitt.com

Commandes / Demandes

Bestellungen / Preisanfragen

Purchase orders / Inquiries

Tel: +41 26 460 74 15
Fax +41 26 460 74 07
E-mail: customerservice@frewitt.com

Formulaire de commande / d'offre au verso.

Bestellformular / Angebotsformular auf der Rückseite

Order / Inquiry form on the back

Professional Milling and Handling of Powders

FREWITT

☐ **Commande / Bestellung / Purchase order** ☐ **Demande d'offre / Preisanfrage / Inquiries**

N°Commande / Ihre Bestell-Nr. / y/PO N°: .....

Société / Firma / Company: .....
Tel: .....
Fax: .....
E-mail: .....

Addresse de livraison / Lieferanschrift / Delivery address

.....

Adresse de facturation / Rechnungsanschrift / Invoice address

.....

| N°art. / Art.Nr / Item N° | Quantité / Menge / Quantity | Description / Bezeichnung / Description | Type machine / Maschinentyp / Machine type | Référence / Referenz / Reference |
|---|---|---|---|---|
| | | | | |
| | | | | |
| | | | | |
| | | | | |
| | | | | |
| | | | | |
| | | | | |
| | | | | |
| | | | | |
| | | | | |
| | | | | |
| | | | | |
| | | | | |
| | | | | |
| | | | | |
| | | | | |
| | | | | |
| | | | | |
| | | | | |
| | | | | |
| | | | | |
| | | | | |
| | | | | |
| | | | | |
| | | | | |
| | | | | |

Professional Milling and Handling of Powders

# TOOLS

Besides the correct adjustment of the machine, the choice of the right sieve is of great importance for a quality sizing. This information gives you some details about the application of our various sieve types.

## Dry sizing

Very strong sieves are required for crushing and dry sizing. FREWITT has introduced sieves with square wire to the market, which provides remarkable advantages in comparison to conventional round wire sieves.

***Square wire sieves***

These sieves, developed by FREWITT, are made of square wire lengthways, parallel to the rotor arms and of round wires perpendicularly.

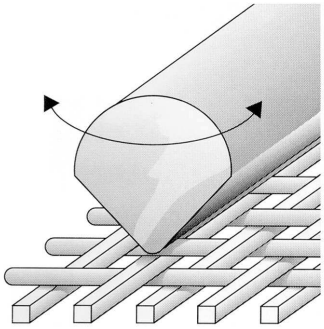

***What are the advantages?***

- Up to 15% more output
- Cutting effect due to the square wire

***How to explain such improvements?***

The sharp edge of the square wire provides a breaking effect as opposed to the crushing of the product against the curved surface of round wires. The material breaks on the edge of the square wire. Thus producing less fines with a higher yield (see sketch).

***Round wire sieves***

These sieves are adequate for sieving and loosening of lumped products.

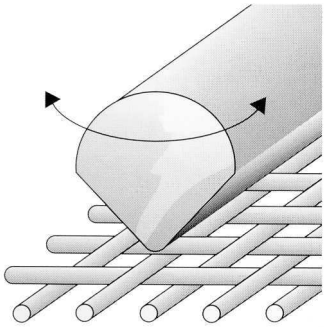

Professional Milling and Handling of Powders

## Wet sizing

***Round wire sieves***

During wet sizing, the material has to be cut to obtain granules. Therefore the sieves are made of fine wires in proportion to the mesh size. This process can be compared with cutting butter. The thinner the wire, the less power is required.

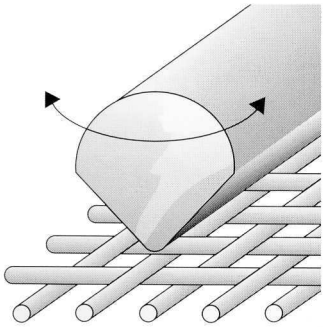

***Rotor***

The capacity of the sizing mill is obviously also dependent on the rotor. Its long experience has allowed FREWITT to develop the best form of rotor arms. Due to the hard work done by the rotor, wear occurs after extended use.

***Consequences of wear?***

- Lower output
- Change of the final grain size distribution
- More fines

***When is renewal of the rotor required?***

When the edges F are rounded-off.

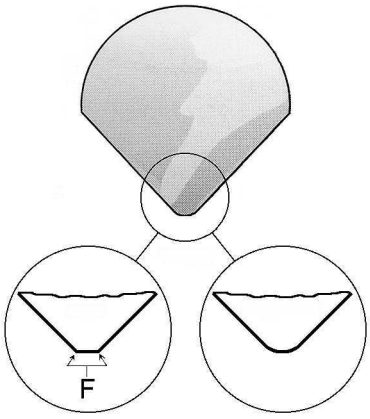


## Adjustment of the installation

See chapter 5 – adjustment of the rigid screen support and 5 – adjustment of the directly mounted sieves

Professional Milling and Handling of Powders

On the sizing mills type MF it is possible to work either with sieves mounted on a rigid screen support or with sieves for direct mounting

## SIEVE ON RIGID SCREEN SUPPORT

Works without contact between sieve and rotor.
Limited wear and tear.
Used for dry and wet products, mesh openings from 0,25 to 20 mm.

The rigid screen support is availabe in two dimensions:

- for sieves with wire ∅ < 1,6 mm (standard)
- for sieves with wire ∅ > 1,6 mm

**Sieve without reinforced edges**

Sieve wire solid enough.

MS 3,15 x 0,8 mm to MS 10,0 x 1,5 mm.

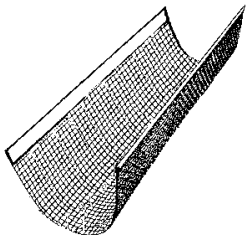

**Sieve with reinforced edges**

Edges reinforced to avoid the fray of the sieve cloth if the sieve wire is not solid enough.

MS 1,0 x 0,63 mm to MS 2,5 x 0,71 mm.

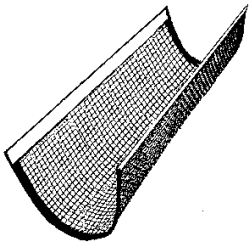

**Sieve with reinforced edges, welded on a light screen support**

smooth sieves, fine wire, light support with square openings to avoid any deformation of the sieve.

MS 0,25 x 0,16 mm to MS 2,5 x 0,71 mm.

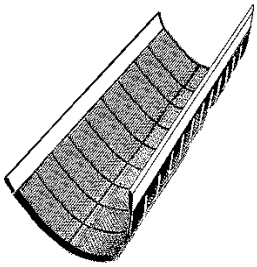

**Perforated plate**

higher rigidity in comparison with the sieves - is mainly used for very hard products for which the risk of sieve breaking is elevated.

∅ of openings from 1,0 to 10 mm.

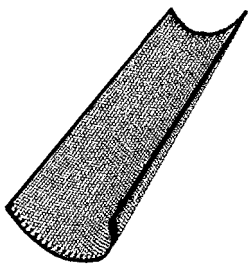

**Rasp**

hard or soft products - available on request. Is only used with rotating motion of the rotor.
Rasped plate "Konidur".

Openings from 0,25 mm to 10 mm.

Key: MS = Mesh size x ∅ of the wire



Professional Milling and Handling of Powders

## SIEVES FOR DIRECT MOUNTING

Sieve in contact with the rotor.
Advantages in comparison with the sieves used with the rigid screen support:
- higher surface area
- less risk of stuffing, especially for small size openings.

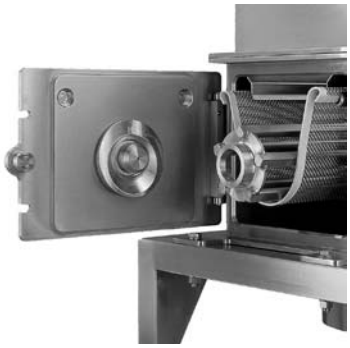

**Sieves without any reinforcement**

Sieve wire solid enough.

MS 1,0 x 0,63 mm to MS 20 x 2,0 mm.

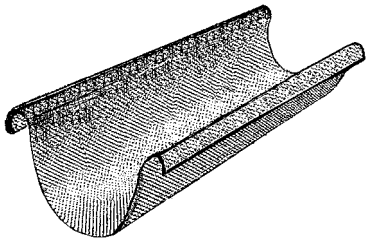

**Sieves with rubber edges**

Edges with vulcanised rubber on the circumference. Strengthens the sieve, avoids the fray of the sieve wire and facilitates the apply.

MS 0,25 x 0,16 mm to MS 10 x 1,4 mm.

**Sieve screwed on a light screen support**

Sieves with fine wire screwed on a light screen support with openings of 10 x 10 mm to avoid any deformation of the sieve.

MS 0,25 x 0,16 mm to MS 3,55 x 0,8 mm.

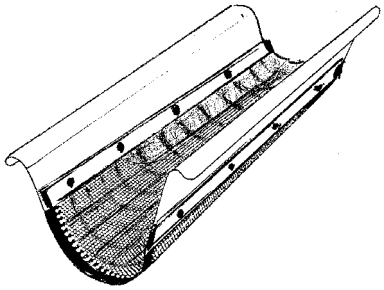

**Perforated plate**

higher rigidity - is mainly used for very hard products for which the risk of sieve breaking is elevated.

∅ of the openings from 1,0 mm to 10 mm.

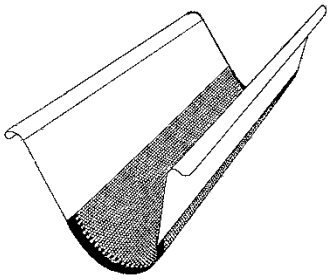

Key: MS = Mesh size x ∅ of the wire

Professional Milling and Handling of Powders

Les treillis doivent être entreposés correctement.

Die Siebgewebe müssen ordnungsgemäß gelagert werden.

The sieves must be stored correctly.

Un entreposage incorrect peut endommager les treillis

Eine falsche Lagerung kann die Siebgewebe beschädigen

Incorrect storage can damage material to the sieves

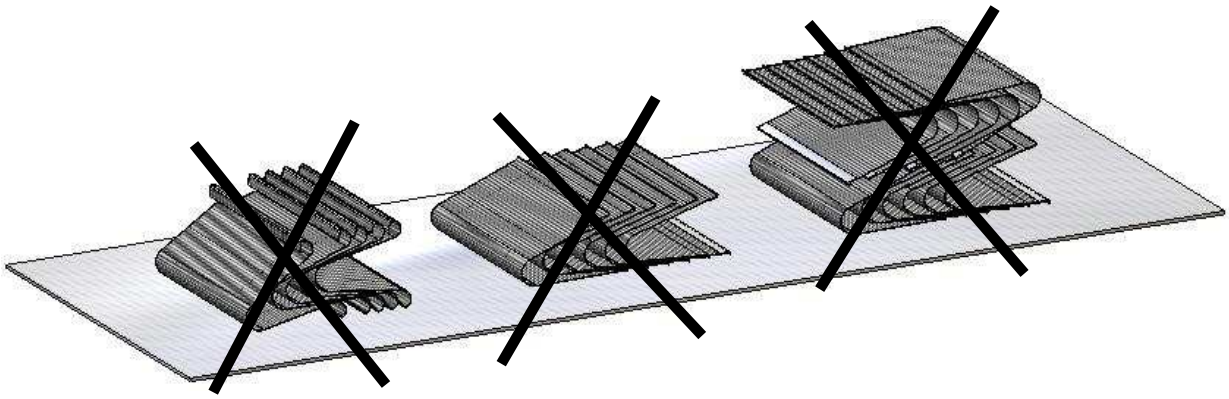

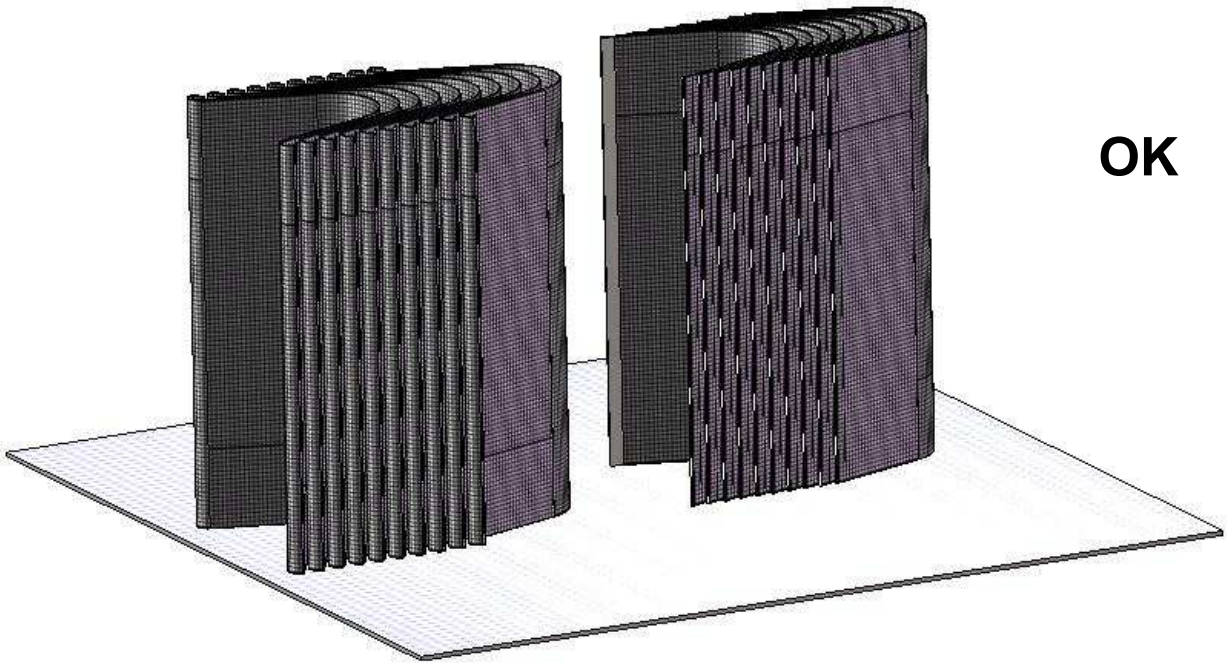

**OK**

# MF-3

**Treillis fins pour berceau rigide 400294**
**Feine Siebe für starre Stütze 400294**
**Fine sieves for rigid screen support 400294**

| | |
|---|---|
| Surface utile<br>Wirksame Fläche<br>Useful surface | 370 cm² |

**316**
**(1.4401)**

| Article<br>Artikel<br>Article | Ouverture maille<br>Maschenweite<br>Mesh opening<br>**mm** | Fil<br>Draht<br>Wire<br>**mm** | Passage<br>Nutzfläche<br>Passage<br>**%** | Prix<br>Preis<br>Price |
|---|---|---|---|---|
| 408823 | 3.15 | Ø 0.80 | 64 | Sur demande<br>Auf Anfrage<br>On request |
| 408824 | 3.55 | Ø 0.80 | 67 | |
| 408825 | 4.00 | Ø 1.00 | 64 | |
| 408826 | 4.50 | Ø 1.00 | 67 | |
| 408827 | 5.00 | Ø 1.25 | 64 | |
| 408828 | 5.60 | Ø 1.25 | 67 | |
| 408818 | 6.00 | Ø 1.50 | 64 | |
| 408820 | 7.00 | Ø 1.50 | 68 | |
| 408822 | 8.00 | Ø 1.50 | 71 | |
| 408830 | 10.00 | Ø 1.50 | 76 | |
| 408813 | 3.15 | ■ 1.50 | 46 | |
| 408816 | 3.50 | ■ 1.50 | 49 | |
| 408821 | 7.00 | ■ 1.50 | 68 | |

**Ø = fil rond / Runddraht / round wire**
**■ = fil carré / Vierkantdraht / square wire**

**Use original Frewitt spare and wear parts only.**
**Using non Frewitt parts may lead to dangerous situations (explosion or injury) and will void the ATEX certification**

Date d'impression / Druck Datum / Printed Date : 03.05.2011
Prix indicatifs, sous réserve de modification / Richtpreise, Aenderungen vorbehalten / Approximate price, subject to change

# MF-3

**Treillis grossier pour berceau rigide 416859**
**Grobe Siebe für starre Stütze 416859**
**Coarse sieves for rigid screen support 416859**

| | |
|---|---|
| Surface utile<br>Wirksame Fläche<br>Useful surface | 370 cm² |

**316**
**(1.4401)**

| Article<br>Artikel<br>Article | Ouverture maille<br>Maschenweite<br>Mesh opening<br>**mm** | Fil<br>Draht<br>Wire<br>**mm** | Passage<br>Nutzfläche<br>Passage<br>**%** | Prix<br>Preis<br>Price |
|---|---|---|---|---|
| 408955 | 4.00 | Ø 2.00 | 44 | Sur demande<br>Auf Anfrage<br>On request |
| 408956 | 4.50 | Ø 2.00 | 48 | |
| 408957 | 5.00 | Ø 2.00 | 51 | |
| 408958 | 6.00 | Ø 2.00 | 56 | |
| 408960 | 7.00 | Ø 2.00 | 60 | |
| 408961 | 7.50 | Ø 2.00 | 62 | |
| 408962 | 8.00 | Ø 2.00 | 64 | |
| 408963 | 9.00 | Ø 2.00 | 67 | |
| 408964 | 10.00 | Ø 2.00 | 69 | |
| 408965 | 11.00 | Ø 2.00 | 72 | |
| 408966 | 12.00 | Ø 2.00 | 73 | |
| 408967 | 15.00 | Ø 2.00 | 78 | |
| 408968 | 20.00 | Ø 2.00 | 82 | |

**Ø = fil rond / Runddraht / round wire**

**Use original Frewitt spare and wear parts only.**
**Using non Frewitt parts may lead to dangerous situations (explosion or injury)**
**and will void the ATEX certification**

Date d'impression / Druck Datum / Printed Date : 03.05.2011
Prix indicatifs, sous réserve de modification / Richtpreise, Aenderungen vorbehalten / Approximate price, subject to change

# MF-3

**Treillis pour berceau rigide 400294**
**Siebe für starre Stütze 400294**
**Sieves for rigid screen support 400294**

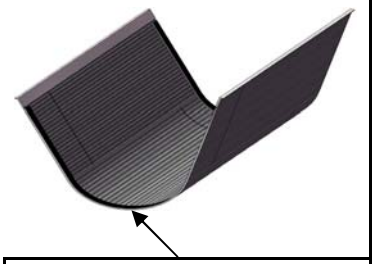

| Surface utile<br>Wirksame Fläche 370 cm²<br>Useful surface | **316**<br>**(1.4401)** | bords renforcés<br>verstärkte Rändern<br>reinforced edges |
|---|---|---|

| Article<br>Artikel<br>Article | Ouverture maille<br>Maschenweite<br>Mesh opening<br>**mm** | Fil<br>Draht<br>Wire<br>**mm** | Passage<br>Nutzfläche<br>Passage<br>**%** | Prix<br>Preis<br>Price |
|---|---|---|---|---|
| 407401 | 1.00 | Ø 0.63 | 38 | Sur demande<br>Auf Anfrage<br>On request |
| 407407 | 1.25 | Ø 0.80 | 37 | |
| 420843 | 1.50 | Ø 1.00 | 36 | |
| 407424 | 1.60 | Ø 1.00 | 38 | |
| 408810 | 2.00 | Ø 1.00 | 44 | |
| 406959 | 2.50 | Ø 1.00 | 51 | |
| 407406 | 1.00 | ■ 0.63 | 38 | |
| 407408 | 1.25 | ■ 0.80 | 37 | |
| 408809 | 1.50 | ■ 1.00 | 36 | |
| 408811 | 2.00 | ■ 1.00 | 44 | |
| 408230 | 2.50 | ■ 1.00 | 51 | |

**Ø = fil rond / Runddraht / round wire**
**■ = fil carré / Vierkantdraht / square wire**

**Use original Frewitt spare and wear parts only.**
**Using non Frewitt parts may lead to dangerous situations (explosion or injury) and will void the ATEX certification**

Date d'impression / Druck Datum / Printed Date : 03.05.2011
Prix indicatifs, sous réserve de modification / Richtpreise, Aenderungen vorbehalten / Approximate price, subject to change

# MF-3

**Treillis sur support léger**
**Siebe auf leichter Stütze**
**Sieves on light screen support**

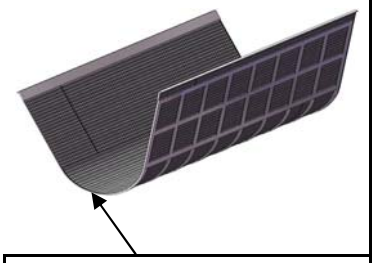

| | | |
|---|---|---|
| Surface utile<br>Wirksame Fläche 370 cm²<br>Useful surface | **316**<br>**(1.4401)** | bords renforcés<br>verstärkte Rändern<br>reinforced edges |

| Article<br>Artikel<br>Article | Ouverture maille<br>Maschenweite<br>Mesh opening<br>**mm** | Fil<br>Draht<br>Wire<br>**mm** | Passage<br>Nutzfläche<br>Passage<br>**%** | Prix<br>Preis<br>Price |
|---|---|---|---|---|
| 408836 | 0.25 | Ø 0.16 | 37 | Sur demande<br>Auf Anfrage<br>On request |
| 408837 | 0.315 | Ø 0.20 | 37 | |
| 408838 | 0.40 | Ø 0.25 | 38 | |
| 408839 | 0.50 | Ø 0.25 | 44 | |
| 408840 | 0.63 | Ø 0.40 | 37 | |
| 408842 | 0.71 | Ø 0.45 | 37 | |
| 408844 | 0.80 | Ø 0.50 | 38 | |
| 408831 | 1.00 | Ø 0.32 | 57 | |
| 408832 | 1.25 | Ø 0.40 | 57 | |
| 408833 | 1.60 | Ø 0.50 | 58 | |
| 408834 | 2.00 | Ø 0.63 | 58 | |
| 408835 | 2.50 | Ø 0.71 | 61 | |
| 408841 | 0.63 | ■ 0.40 | 37 | |
| 408843 | 0.71 | ■ 0.45 | 37 | |
| 408845 | 0.80 | ■ 0.50 | 38 | |

**Ø = fil rond / Runddraht / round wire**
**■ = fil carré / Vierkantdraht / square wire**

**Use original Frewitt spare and wear parts only.**
**Using non Frewitt parts may lead to dangerous situations (explosion or injury) and will void the ATEX certification**

Date d'impression / Druck Datum / Printed Date : 03.05.2011
Prix indicatifs, sous réserve de modification / Richtpreise, Aenderungen vorbehalten / Approximate price, subject to change

# MF-3

**Treillis pour tension directe (sans berceau rigide)**

**Siebe für Direkt-Einspannen (ohne starre Stütze)**

**Sieves For direct tensioning (without rigid screen support)**

| Surface utile<br>Wirksame Fläche 370 cm²<br>Useful surface | **316**<br>**(1.4401)** |
|---|---|

| Article<br>Artikel<br>Article | Ouverture maille<br>Maschenweite<br>Mesh opening<br>**mm** | Fil<br>Draht<br>Wire<br>**mm** | Passage<br>Nutzfläche<br>Passage<br>**%** | Prix<br>Preis<br>Price |
|---|---|---|---|---|
| 408384 | 1.00 | Ø 0.63 | 38 | Sur demande<br>Auf Anfrage<br>On request |
| 408388 | 1.25 | Ø 0.80 | 37 | |
| 418904 | 1.50 | Ø 1.00 | 36 | |
| 408392 | 1.60 | Ø 1.00 | 38 | |
| 408396 | 2.00 | Ø 1.00 | 44 | |
| 408400 | 2.50 | Ø 1.00 | 51 | |
| 408404 | 3.15 | Ø 1.50 | 46 | |
| 408408 | 3.50 | Ø 1.50 | 49 | |
| 408412 | 4.00 | Ø 2.00 | 44 | |
| 408413 | 4.50 | Ø 2.00 | 48 | |
| 408416 | 5.00 | Ø 2.00 | 51 | |
| 408418 | 6.00 | Ø 2.00 | 56 | |
| 408421 | 7.00 | Ø 2.00 | 60 | |
| 408422 | 7.50 | Ø 2.00 | 62 | |
| 408424 | 8.00 | Ø 2.00 | 64 | |
| 408425 | 9.00 | Ø 2.00 | 67 | |
| 408426 | 10.00 | Ø 2.00 | 69 | |
| 408427 | 11.00 | Ø 2.00 | 72 | |

**Ø = fil rond / Runddraht / round wire**

**Use original Frewitt spare and wear parts only.**
**Using non Frewitt parts may lead to dangerous situations (explosion or injury) and will void the ATEX certification**

Date d'impression / Druck Datum / Printed Date : 03.05.2011
Prix indicatifs, sous réserve de modification / Richtpreise, Aenderungen vorbehalten / Approximate price, subject to change

| Article<br>Artikel<br>Article | Ouverture maille<br>Maschenweite<br>Mesh opening<br>**mm** | Fil<br>Draht<br>Wire<br>**mm** | Passage<br>Nutzfläche<br>Passage<br>**%** | Prix<br>Preis<br>Price |
|---|---|---|---|---|
| 408428 | 12.00 | Ø 2.00 | 73 | Sur demande<br>Auf Anfrage<br>On request |
| 408429 | 15.00 | Ø 2.00 | 78 | |
| 408430 | 20.00 | Ø 2.00 | 82 | |
| 408385 | 1.00 | ■ 0.63 | 38 | |
| 408389 | 1.25 | ■ 0.80 | 37 | |
| 408393 | 1.50 | ■ 1.00 | 36 | |
| 408397 | 2.00 | ■ 1.00 | 44 | |
| 408401 | 2.50 | ■ 1.00 | 51 | |
| 408405 | 3.15 | ■ 1.50 | 46 | |
| 408409 | 3.50 | ■ 1.50 | 49 | |
| 408415 | 5.00 | ■ 1.50 | 59 | |
| 408420 | 7.00 | ■ 1.50 | 68 | |

**Ø = fil rond / Runddraht / round wire**
**■ = fil carré / Vierkantdraht / square wire**

**Use original Frewitt spare and wear parts only.**
**Using non Frewitt parts may lead to dangerous situations (explosion or injury) and will void the ATEX certification**

Date d'impression / Druck Datum / Printed Date : 03.05.2011
Prix indicatifs, sous réserve de modification / Richtpreise, Aenderungen vorbehalten / Approximate price, subject to change

# MF-3

**Treillis pour tension directe (sans berceau rigide)**

**Siebe für Direkt-Einspannen (ohne starre Stütze)**

**Sieves For direct tensioning (without rigid screen support)**

| Surface utile<br>Wirksame Fläche 370 cm²<br>Useful surface | **316**<br>**(1.4401)** | bords gommés<br>Gummirand<br>rubber edges |
|---|---|---|

| Article<br>Artikel<br>Article | Ouverture maille<br>Maschenweite<br>Mesh opening<br>**mm** | Fil<br>Draht<br>Wire<br>**mm** | Passage<br>Nutzfläche<br>Passage<br>**%** | Prix<br>Preis<br>Price |
|---|---|---|---|---|
| 408445 | 0.25 | Ø 0.16 | 37 | Sur demande<br>Auf Anfrage<br>On request |
| 408446 | 0.315 | Ø 0.20 | 37 | |
| 408447 | 0.40 | Ø 0.25 | 38 | |
| 408448 | 0.50 | Ø 0.25 | 44 | |
| 408449 | 0.63 | Ø 0.40 | 37 | |
| 408451 | 0.71 | Ø 0.45 | 37 | |
| 408453 | 0.80 | Ø 0.50 | 38 | |
| 408386 | 1.00 | Ø 0.63 | 38 | |
| 408390 | 1.25 | Ø 0.80 | 37 | |
| 418358 | 1.50 | Ø 1.00 | 36 | |
| 408433 | 1.60 | Ø 0.50 | 58 | |
| 408394 | 1.60 | Ø 1.00 | 38 | |
| 408398 | 2.00 | Ø 1.00 | 44 | |
| 408402 | 2.50 | Ø 1.00 | 51 | |
| 408406 | 3.15 | Ø 1.50 | 46 | |
| 408437 | 3.55 | Ø 0.80 | 67 | |

**Ø = fil rond / Runddraht / round wire**

**Use original Frewitt spare and wear parts only.**
**Using non Frewitt parts may lead to dangerous situations (explosion or injury) and will void the ATEX certification**

Date d'impression / Druck Datum / Printed Date : 03.05.2011
Prix indicatifs, sous réserve de modification / Richtpreise, Aenderungen vorbehalten / Approximate price, subject to change

| Article<br>Artikel<br>Article | Ouverture maille<br>Maschenweite<br>Mesh opening<br>**mm** | Fil<br>Draht<br>Wire<br>**mm** | Passage<br>Nutzfläche<br>Passage<br>**%** | Prix<br>Preis<br>Price |
|---|---|---|---|---|
| 408438 | 4.00 | Ø 1.00 | 64 | Sur demande<br>Auf Anfrage<br>On request |
| 408439 | 4.50 | Ø 1.00 | 67 | |
| 408440 | 5.00 | Ø 1.25 | 64 | |
| 408441 | 5.60 | Ø 1.25 | 67 | |
| 408442 | 8.00 | Ø 1.25 | 75 | |
| 408443 | 10.00 | Ø 1.50 | 76 | |
| 408450 | 0.63 | ■ 0.40 | 37 | |
| 408452 | 0.71 | ■ 0.45 | 37 | |
| 408454 | 0.80 | ■ 0.50 | 38 | |
| 408387 | 1.00 | ■ 0.63 | 38 | |
| 408391 | 1.25 | ■ 0.80 | 37 | |
| 408411 | 3.55 | ■ 1.50 | 49 | |
| 408399 | 2.00 | ■ 1.00 | 44 | |

**Ø = fil rond / Runddraht / round wire**
**■ = fil carré / Vierkantdraht / square wire**

**Use original Frewitt spare and wear parts only.**
**Using non Frewitt parts may lead to dangerous situations (explosion or injury) and will void the ATEX certification**

Date d'impression / Druck Datum / Printed Date : 03.05.2011
Prix indicatifs, sous réserve de modification / Richtpreise, Aenderungen vorbehalten / Approximate price, subject to change

# MF-3

**Treillis pour tension directe pour berceau léger 408917**

**Siebe für Direkt-Einspannen für leichte Stütze 408917**

**Sieves for direct tensioning for light screen support 408917**

| Surface utile<br>Wirksame Fläche 370 cm²<br>Useful surface |
|---|

**316**
**(1.4401)**

| Article<br>Artikel<br>Article | Ouverture maille<br>Maschenweite<br>Mesh opening<br>**mm** | Fil<br>Draht<br>Wire<br>**mm** | Passage<br>Nutzfläche<br>Passage<br>**%** | Prix<br>Preis<br>Price |
|---|---|---|---|---|
| 408683 | 0.25 | Ø 0.16 | 37 | Sur demande<br>Auf Anfrage<br>On request |
| 408684 | 0.315 | Ø 0.20 | 37 | |
| 408685 | 0.40 | Ø 0.25 | 38 | |
| 408686 | 0.50 | Ø 0.25 | 44 | |
| 408687 | 0.63 | Ø 0.40 | 37 | |
| 408689 | 0.71 | Ø 0.45 | 37 | |
| 408691 | 0.80 | Ø 0.50 | 38 | |
| 408677 | 1.00 | Ø 0.63 | 38 | |
| 408681 | 1.25 | Ø 0.80 | 37 | |
| 408672 | 1.60 | Ø 0.50 | 58 | |
| 408671 | 2.00 | Ø 0.63 | 58 | |
| 408673 | 2.50 | Ø 0.71 | 61 | |
| 408675 | 3.15 | Ø 0.80 | 64 | |
| 408676 | 3.55 | Ø 0.80 | 67 | |
| 408688 | 0.63 | ■ 0.40 | 37 | |
| 408690 | 0.71 | ■ 0.45 | 37 | |
| 408692 | 0.80 | ■ 0.50 | 38 | |
| 408679 | 1.00 | ■ 0.63 | 38 | |
| 408682 | 1.25 | ■ 0.80 | 37 | |

**Ø = fil rond / Runddraht / round wire**
**■ = fil carré / Vierkantdraht / square wire**

**Use original Frewitt spare and wear parts only.**
**Using non Frewitt parts may lead to dangerous situations (explosion or injury) and will void the ATEX certification**

Date d'impression / Druck Datum / Printed Date : 03.05.2011
Prix indicatifs, sous réserve de modification / Richtpreise, Aenderungen vorbehalten / Approximate price, subject to change

# MF-3

**Rotor** **316 L**

| Article<br>Artikel<br>Article | | Prix<br>Preis<br>Price |
|---|---|---|
| 401402 | 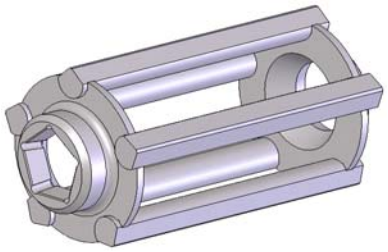 | Sur demande<br>Auf Anfrage<br>On request |

**Use original Frewitt spare and wear parts only.**
**Using non Frewitt parts may lead to dangerous situations (explosion or injury) and will void the ATEX certification**

Date d'impression / Druck Datum / Printed Date : 03.05.2011
Prix indicatifs, sous réserve de modification / Richtpreise, Aenderungen vorbehalten / Approximate price, subject to change

# ELECTRIC / DRIVE / PNEUMATICS

Professional Milling and Handling of Powders

# Project :PRO-11-0078

# SG.TBP 202.M.5216

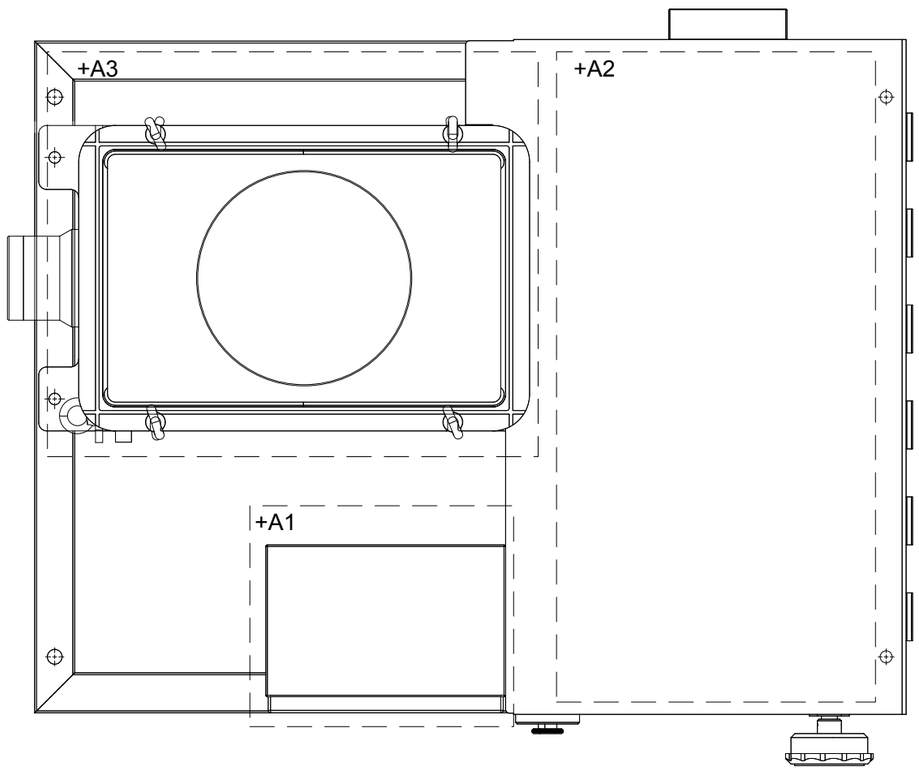


Type : DM - MF-3

Carrying out : 400V,50Hz,3P+N+PE Atex 3D
Atex Zone 20 = Mill
Atex Zone 22 = Rest
Temperature class T4

## Wire colors :

| | | |
|---|---|---|
| Power | 400VAC | Black |
| Power | N | Light blue |
| Power | PE | Green/Yellow |
| Control voltage | 24VDC | Blue |
| Control voltage | 0VDC | White/Blue |

We reserve all rights in this document and in the information contained therein. Reproduction, use or disclosure to third parties without express authority is strictly forbidden.
© Frewitt

| | | | | | | | | |
|---|---|---|---|---|---|---|---|---|
| A | Initial version | | | date | 14.06.2011 | Novartis Singapore, SG-Singapore | | |
| B | Project follow-up | 25.07.11 | vri | User | lge | | | |
| C | Project closure | 06.09.11 | vri | Proved | lge | | | |
| Status | change | date | name | Standard | | Origin | Repl. f. | Repl. by |

Frewitt SA: Milling and Handling of Powders
P.O.B. 615, CH-1701 Fribourg, SWITZERLAND
tel: +41 26 460 74 00 / fax: +41 26 460 74 01
info@frewitt.com / www.frewitt.com

00 - Cover sheet
MF-3

465085

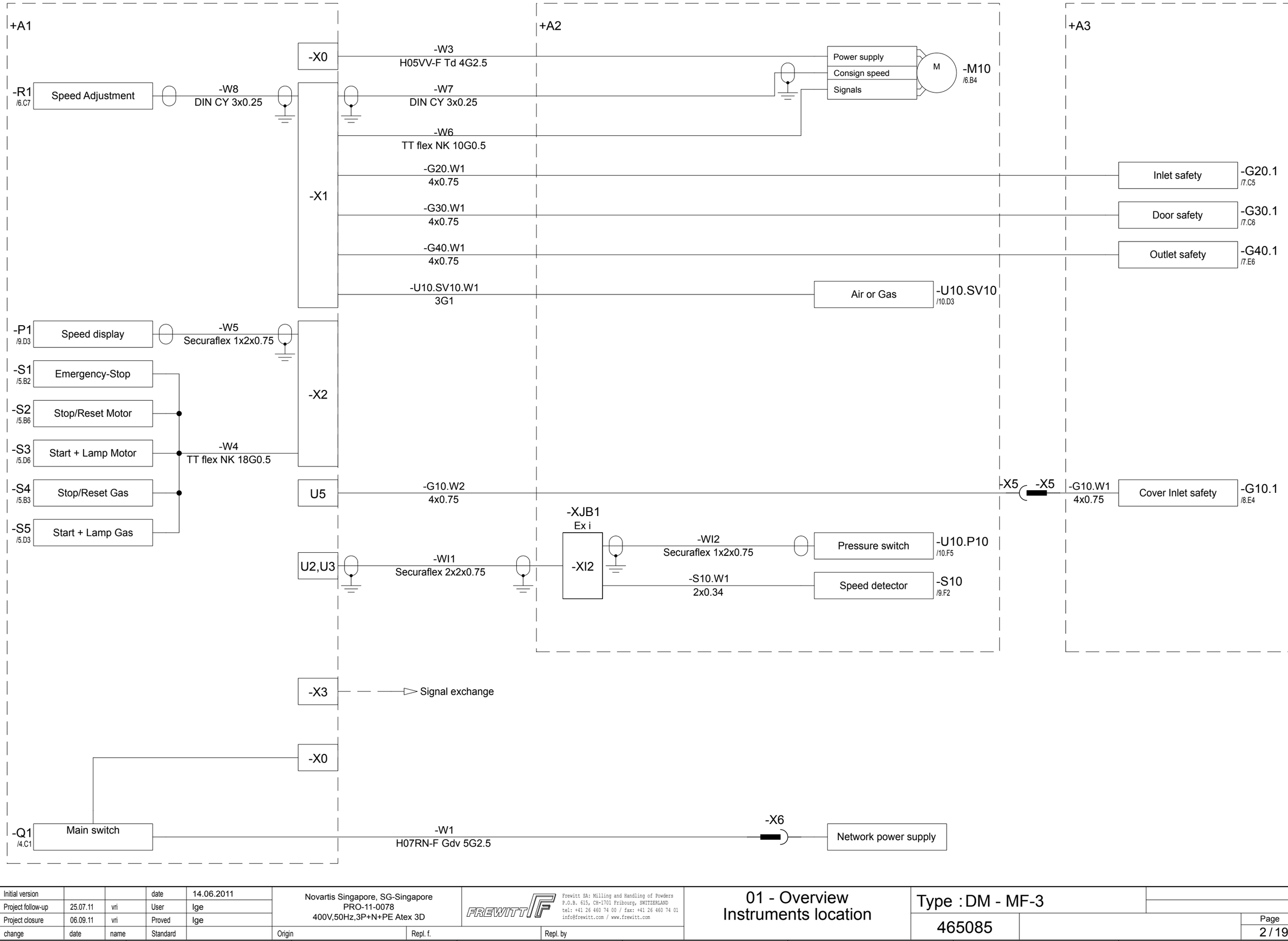


We reserve all rights in this document and in the information contained therein. Reproduction, use or disclosure to third parties without express authority is strictly forbidden.
© Frewitt

| | | | | | |
|---|---|---|---|---|---|
| A | Initial version | | | date | 14.06.2011 |
| B | Project follow-up | 25.07.11 | vri | User | Ige |
| C | Project closure | 06.09.11 | vri | Proved | Ige |
| Status | change | date | name | Standard | |

Novartis Singapore, SG-Singapore
PRO-11-0078
400V,50Hz,3P+N+PE Atex 3D

Origin | Repl. f. | Repl. by

FREWITT
Frewitt SA: Milling and Handling of Powders
P.O.B. 615, CH-1701 Fribourg, SWITZERLAND
tel: +41 26 460 74 00 / fax: +41 26 460 74 01
info@frewitt.com / www.frewitt.com

# 01 - Overview Instruments location

Type : DM - MF-3

465085

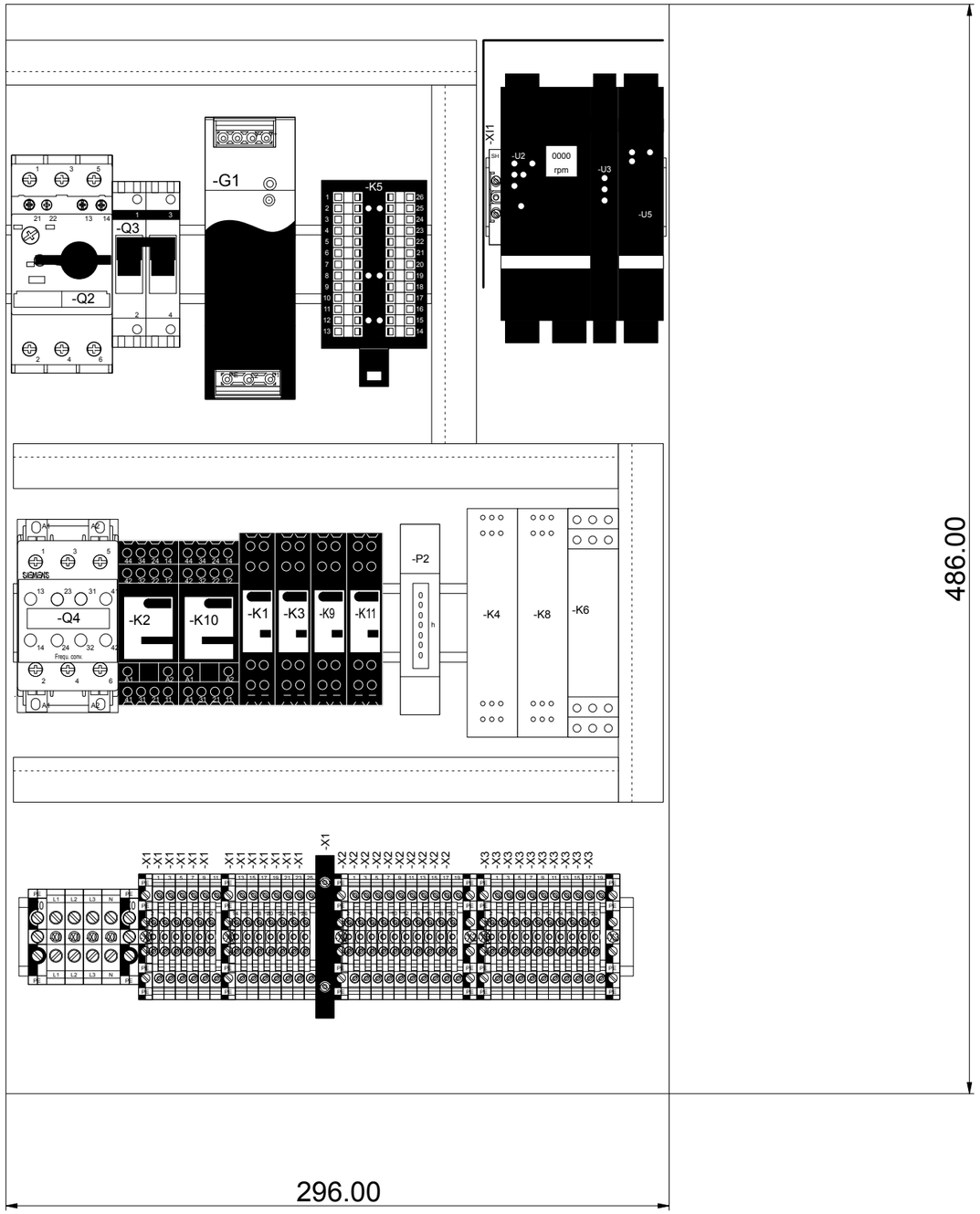


We reserve all rights in this document and in the information contained therein. Reproduction, use or disclosure to third parties without express authority is strictly forbidden.
© Frewitt

| | | | | | | | | |
|---|---|---|---|---|---|---|---|---|
| A | Initial version | | | date | 14.06.2011 | Novartis Singapore, SG-Singapore<br>PRO-11-0078<br>400V,50Hz,3P+N+PE Atex 3D | 02 - Electrocabinet details | Type : DM - MF-3 |
| B | Project follow-up | 25.07.11 | vri | User | Ige | | | +A1 |
| C | Project closure | 06.09.11 | vri | Proved | Ige | | | 465085 |
| Status | change | date | name | Standard | | Origin / Repl. f. / Repl. by | | Page 3 / 19 |

FREWITT
Frewitt SA: Milling and Handling of Powders
P.O.B. 615, CH-1701 Fribourg, SWITZERLAND
tel: +41 26 460 74 00 / fax: +41 26 460 74 01
info@frewitt.com / www.frewitt.com

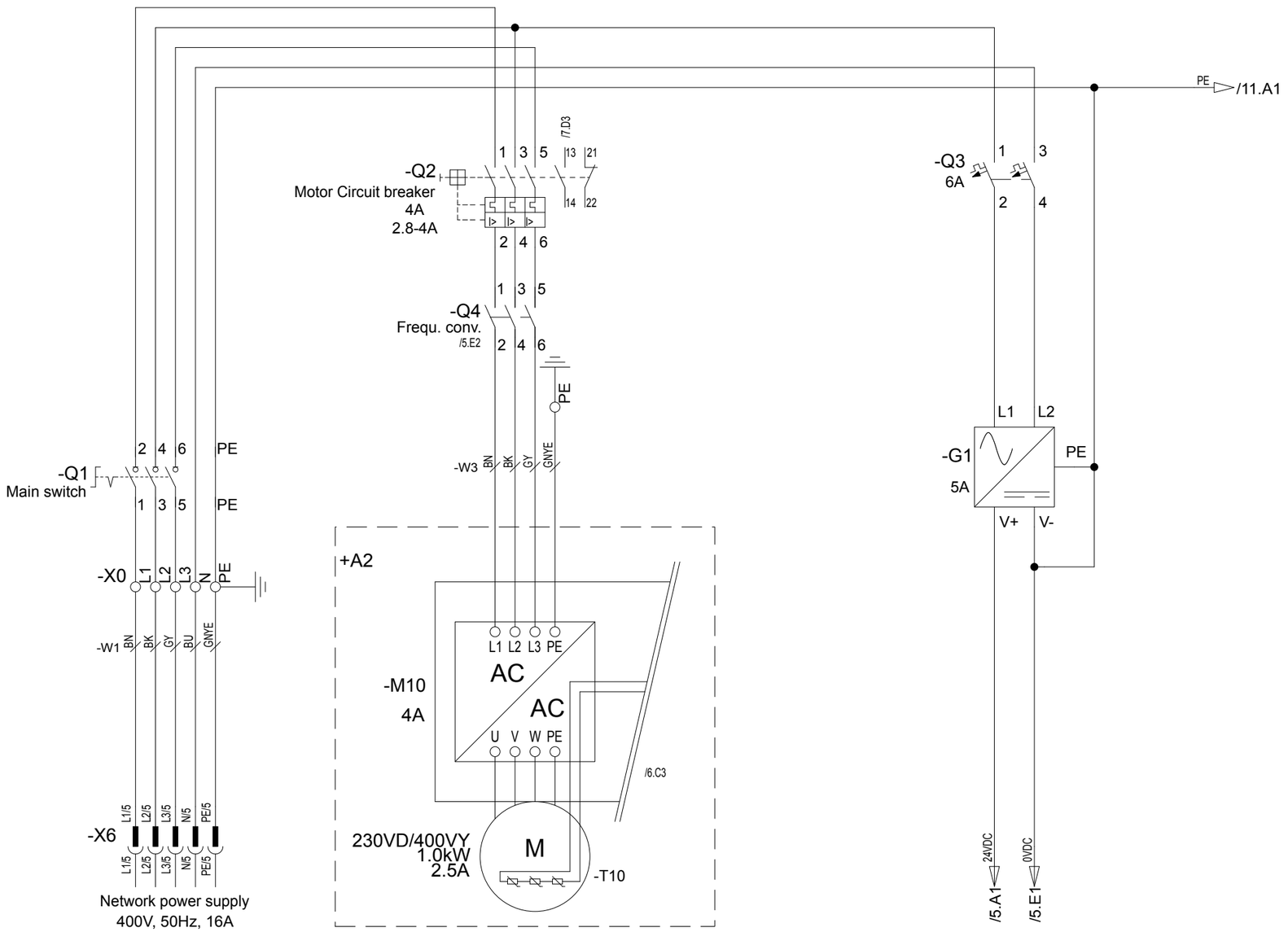


We reserve all rights in this document and in the information contained therein. Reproduction, use or disclosure to third parties without express authority is strictly forbidden.
© Frewitt

| | | | | | | | | | | |
|---|---|---|---|---|---|---|---|---|---|---|
| A | Initial version | | | date | 14.06.2011 | Novartis Singapore, SG-Singapore<br>PRO-11-0078<br>400V,50Hz,3P+N+PE Atex 3D | FREWITT | 03 - Schematic<br>Power supply | Type : DM - MF-3 | |
| B | Project follow-up | 25.07.11 | vri | User | Ige | | | | | +A1 |
| C | Project closure | 06.09.11 | vri | Proved | Ige | | | | 465085 | Page 4 / 19 |
| Status | change | date | name | Standard | | Origin | Repl. f. | Repl. by | | |

Frewitt SA: Milling and Handling of Powders
P.O.B. 615, CH-1701 Fribourg, SWITZERLAND
tel: +41 26 460 74 00 / fax: +41 26 460 74 01
info@frewitt.com / www.frewitt.com

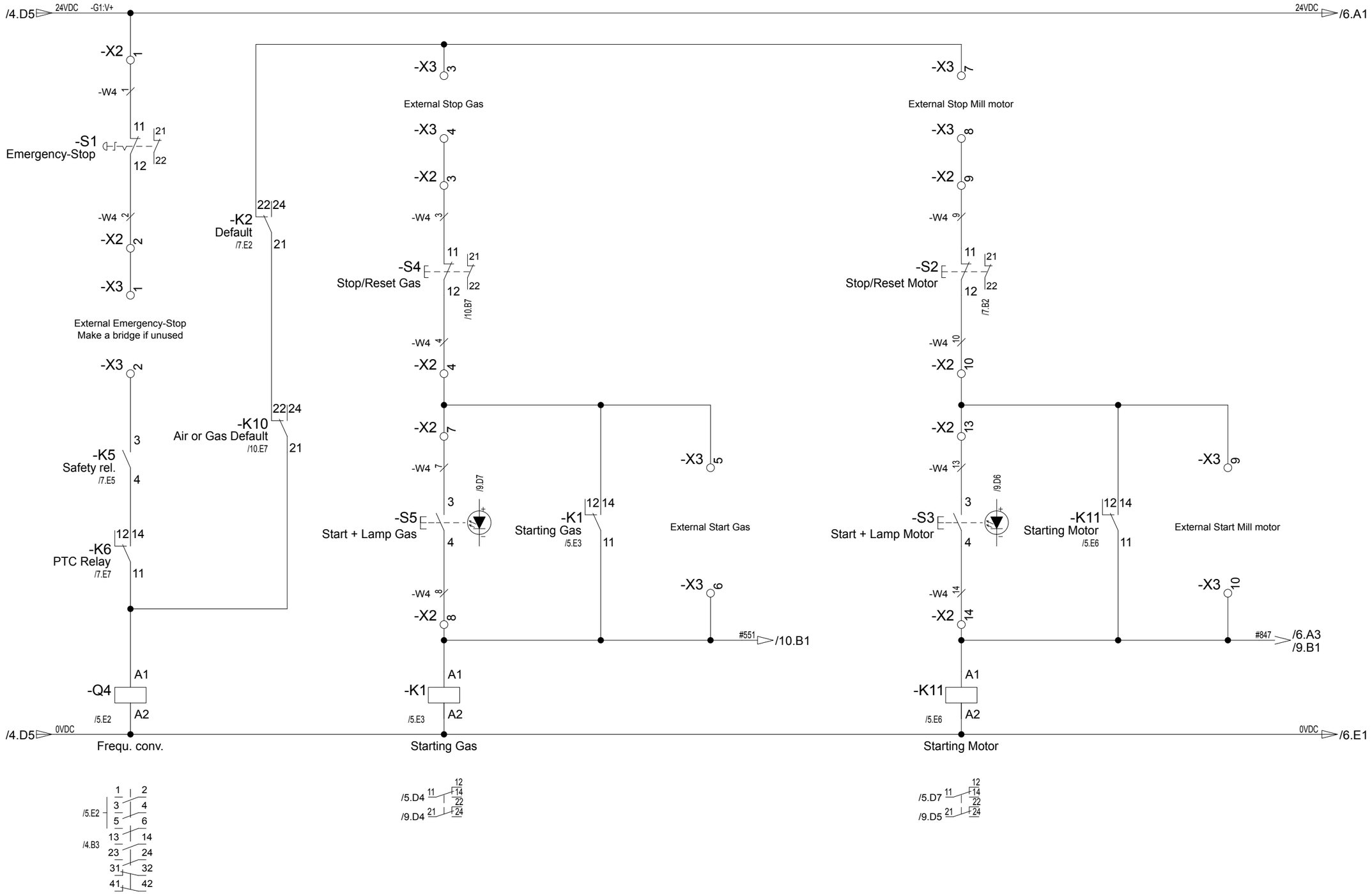


We reserve all rights in this document and in the information contained therein. Reproduction, use or disclosure to third parties without express authority is strictly forbidden.
© Frewitt

| | | | | | |
|---|---|---|---|---|---|
| A | Initial version | | | date | 14.06.2011 |
| B | Project follow-up | 25.07.11 | vri | User | lge |
| C | Project closure | 06.09.11 | vri | Proved | lge |
| Status | change | date | name | Standard | |

Novartis Singapore, SG-Singapore
PRO-11-0078
400V,50Hz,3P+N+PE Atex 3D

Origin | Repl. f. | Repl. by

FREWITT
Frewitt SA: Milling and Handling of Powders
P.O.B. 615, CH-1701 Fribourg, SWITZERLAND
tel: +41 26 460 74 00 / fax: +41 26 460 74 01
info@frewitt.com / www.frewitt.com

# 03 - Schematic Control

Type : DM - MF-3

465085

+A1

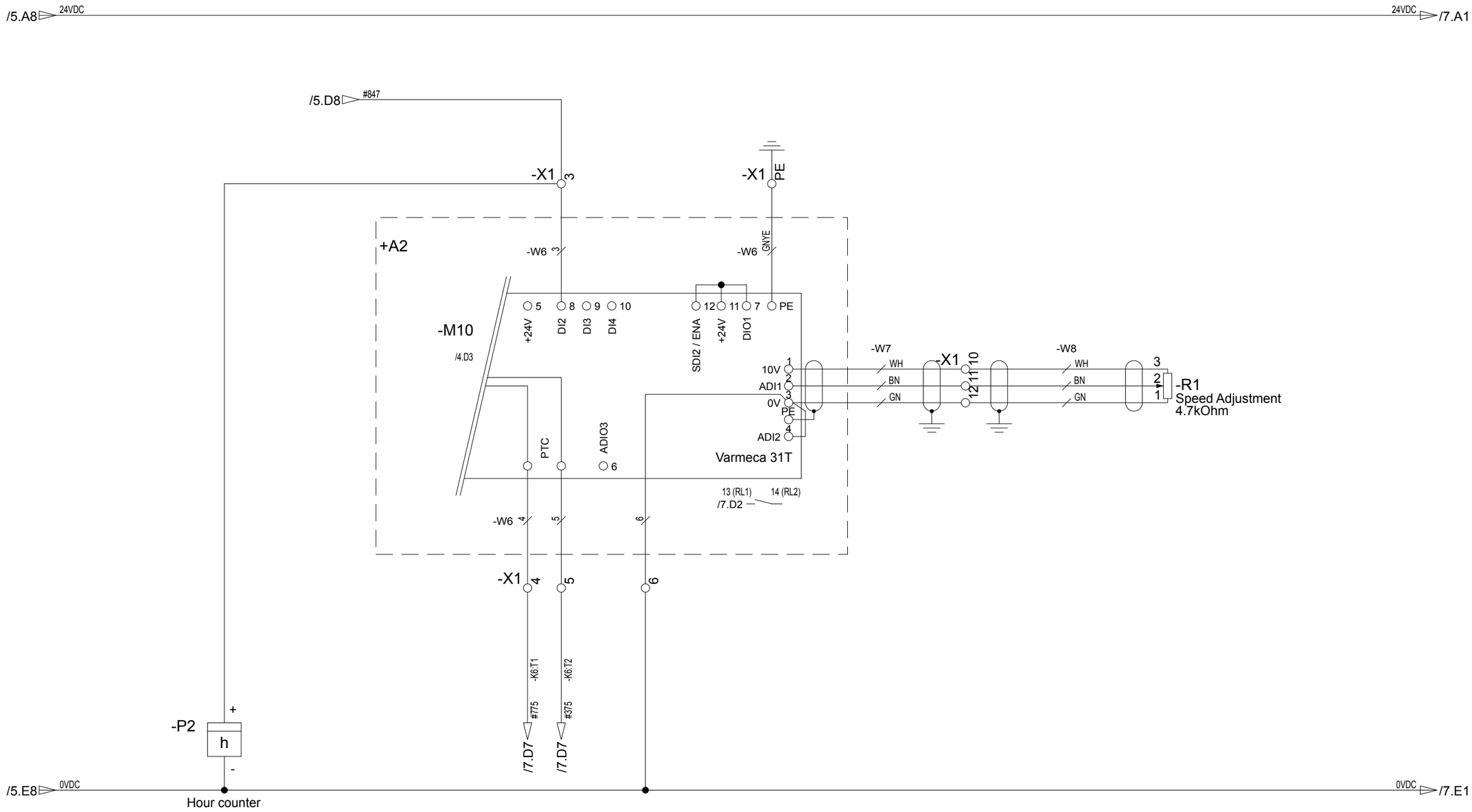


We reserve all rights in this document and in the information contained therein. Reproduction, use or disclosure to third parties without express authority is strictly forbidden.
© Frewitt

| | | | | | |
|---|---|---|---|---|---|
| A | Initial version | | | date | 14.06.2011 |
| B | Project follow-up | 25.07.11 | vri | User | lge |
| C | Project closure | 06.09.11 | vri | Proved | lge |
| Status | change | date | name | Standard | |

Novartis Singapore, SG-Singapore
PRO-11-0078
400V,50Hz,3P+N+PE Atex 3D

Origin | Repl. f. | Repl. by

FREWITT
Frewitt SA: Milling and Handling of Powders
P.O.B. 615, CH-1701 Fribourg, SWITZERLAND
tel: +41 26 460 74 00 / fax: +41 26 460 74 01
info@frewitt.com / www.frewitt.com

03 - Schematic
Frequ. conv.

Type : DM - MF-3

465085

+A1

/6.A8 24VDC

-X3 11

External Reset Machine Default
Make a bridge if unused

-X3 12

-X2 11

-W4 11

-S2 21
Stop/Reset Motor 22
/5.B6

-W4 12

-X2 12

-X1 1

-W6 1

+A2
-M10 13
/6.C5 14

-W6 2

-X1 2

-K2 12 14
Default 11
/7.E2

-K3 12 14
Safety OK 11
/7.E3

-K5 24 25
Safety rel. 26
/7.E5

-K6 22 24
PTC Relay 21
/7.E7

-Q2 13
/4.B3 14

-K2 42 44
Default 41
/7.E2

-K10 42 44
Air or Gas Default 41
/10.E7

+A3
Inlet safety
-G20.2
-G20.1
4 3 2 1
-G20.W1 4 3 2 1

Door safety
-G30.2
-G30.1
4 3 2 1
-G30.W1 4 3 2 1

24VDC /8.A1

/6.D4 #375 -X1:5
/6.D4 #775 -X1:4

-X1 13 14 15 16

-X1 17 18 19 20

-K2 A1 A2
/7.E2

-K3 A1 A2
/7.E3

-K4 A3 B3
0.4s D A2
/7.E4

-K5 1 6 7 8 9
/7.E5 2 17 16 15 14 22 23 21 20 19 18

-K6 A1 T1
>T
A2 T2
/7.E7

/6.E8 0VDC
Default

Safety OK

Flashing

Safety rel.

0VDC /8.E1
PTC Relay

/7.D2 11 12 14 22
/5.B2 21 24
/9.B6 31 32 34
/7.B4 41 42 44

/7.D3 11 12 14 22
21 24

/9.A6 15 16 18

/5.C2 3 4 24
/7.B3 26 25

-U5 9 8
Cover Inlet safety
/8.D2
7

-U5 11 12
Cover Inlet safety
/8.D2
10

-X1 21 22 23 24

+A3
-G40.W1 4 3 2 1
4 3 2 1
-G40.1
-G40.2
Outlet safety

/5.D2 11 12 14 22
/7.C3 21 24

We reserve all rights in this document and in the information contained therein. Reproduction, use or disclosure to third parties without express authority is strictly forbidden.
© Frewitt

| | | | | | |
|---|---|---|---|---|---|
| A | Initial version | | | date | 14.06.2011 |
| B | Project follow-up | 25.07.11 | vri | User | Ige |
| C | Project closure | 06.09.11 | vri | Proved | Ige |
| Status | change | date | name | Standard | |

Novartis Singapore, SG-Singapore
PRO-11-0078
400V,50Hz,3P+N+PE Atex 3D

Origin | Repl. f. | Repl. by

FREWITT
Frewitt SA: Milling and Handling of Powders
P.O.B. 615, CH-1701 Fribourg, SWITZERLAND
tel: +41 26 460 74 00 / fax: +41 26 460 74 01
info@frewitt.com / www.frewitt.com

# 03 - Schematic Safety

Type : DM - MF-3

465085

+A1

/7.A8 24VDC

24VDC /9.A1

14

KFD2-SR2-Ex2.W

-U5

20...30VDC

S3 -U5

/8.D4 Cover Inlet safety

/7.F5 7 9 8

/8.D5 Cover Inlet safety

/7.F5 10 12 11

15

-U5 S1 /8.D2 Ex i 1+ 2+ 3-

-U5 S2 /8.D2 Ex i 4+ 5+ 6-

-G10.W2 4 3 2 1

/7.E8 0VDC

0VDC /9.E1

-X5 4/4 3/4 2/4 1/4

-G10.W1 4 3 2 1

+A3

4 3 2 1

-G10.1

-G10.2

Cover Inlet safety

We reserve all rights in this document and in the information contained therein. Reproduction, use or disclosure to third parties without express authority is strictly forbidden.
© Frewitt

| | | | | | |
|---|---|---|---|---|---|
| A | Initial version | | | date | 14.06.2011 |
| B | Project follow-up | 25.07.11 | vri | User | lge |
| C | Project closure | 06.09.11 | vri | Proved | lge |
| Status | change | date | name | Standard | |

Novartis Singapore, SG-Singapore
PRO-11-0078
400V,50Hz,3P+N+PE Atex 3D

Origin | Repl. f. | Repl. by

FREWITT
Frewitt SA: Milling and Handling of Powders
P.O.B. 615, CH-1701 Fribourg, SWITZERLAND
tel: +41 26 460 74 00 / fax: +41 26 460 74 01
info@frewitt.com / www.frewitt.com

# 03 - Schematic Safety

Type : DM - MF-3

465085

+A1

/8.A8 24VDC

24VDC /10.A1

16 18
-K4
Flashing
/7.E4
15

/5.D8

/10.D6

32 34
-K2
Default
/7.E2
31

34 32
-K10
Air or Gas Default
/10.E7
31

-X2 15

-X2 17

-X2 PE

-W4 15

-W4 17

-W4 GNYE

X1

X1

-S3
Start + Lamp Motor
White
/5.C6
OFF
ON
Default
X2

-S5
Start + Lamp Gas
White
/5.C4
OFF
ON
Default
X2

-W4 16

-X2 16

-X3 19 20
Speed signal 4-20mA
Make a bridge if unused

-X2 18 19 PE

-W5 WH BN

2+ 1-
-P1
Speed display

-K1
Starting Gas
/5.E3
22 24
21

-K11
Starting Motor
/5.E6
22 24
21

-X3 16 15
Gas is running

-X3 17 18
Mill motor is running

-U2
/9.D2
f/I Conv.
0/4...20mA
20..29VDC
48..253VAC
0 0 0 0
Ex i
23+ 7- 8+
24- 1+ 3-

12
10 11
18
16 17
19 20

/8.E8 0VDC

0VDC /10.E1

-WI1 WH BN

+A2
-XI2 1 2

-S10.W1 BN BU
+ -
-S10
Speed detector
EEx-i

We reserve all rights in this document and in the information contained therein. Reproduction, use or disclosure to third parties without express authority is strictly forbidden.
© Frewitt

| | | | | | |
|---|---|---|---|---|---|
| A | Initial version | | | date | 14.06.2011 |
| B | Project follow-up | 25.07.11 | vri | User | Ige |
| C | Project closure | 06.09.11 | vri | Proved | Ige |
| Status | change | date | name | Standard | |

Novartis Singapore, SG-Singapore
PRO-11-0078
400V,50Hz,3P+N+PE Atex 3D

Origin | Repl. f. | Repl. by

FREWITT
Frewitt SA: Milling and Handling of Powders
P.O.B. 615, CH-1701 Fribourg, SWITZERLAND
tel: +41 26 460 74 00 / fax: +41 26 460 74 01
info@frewitt.com / www.frewitt.com

# 03 - Schematic Indication

Type : DM - MF-3

465085

+A1

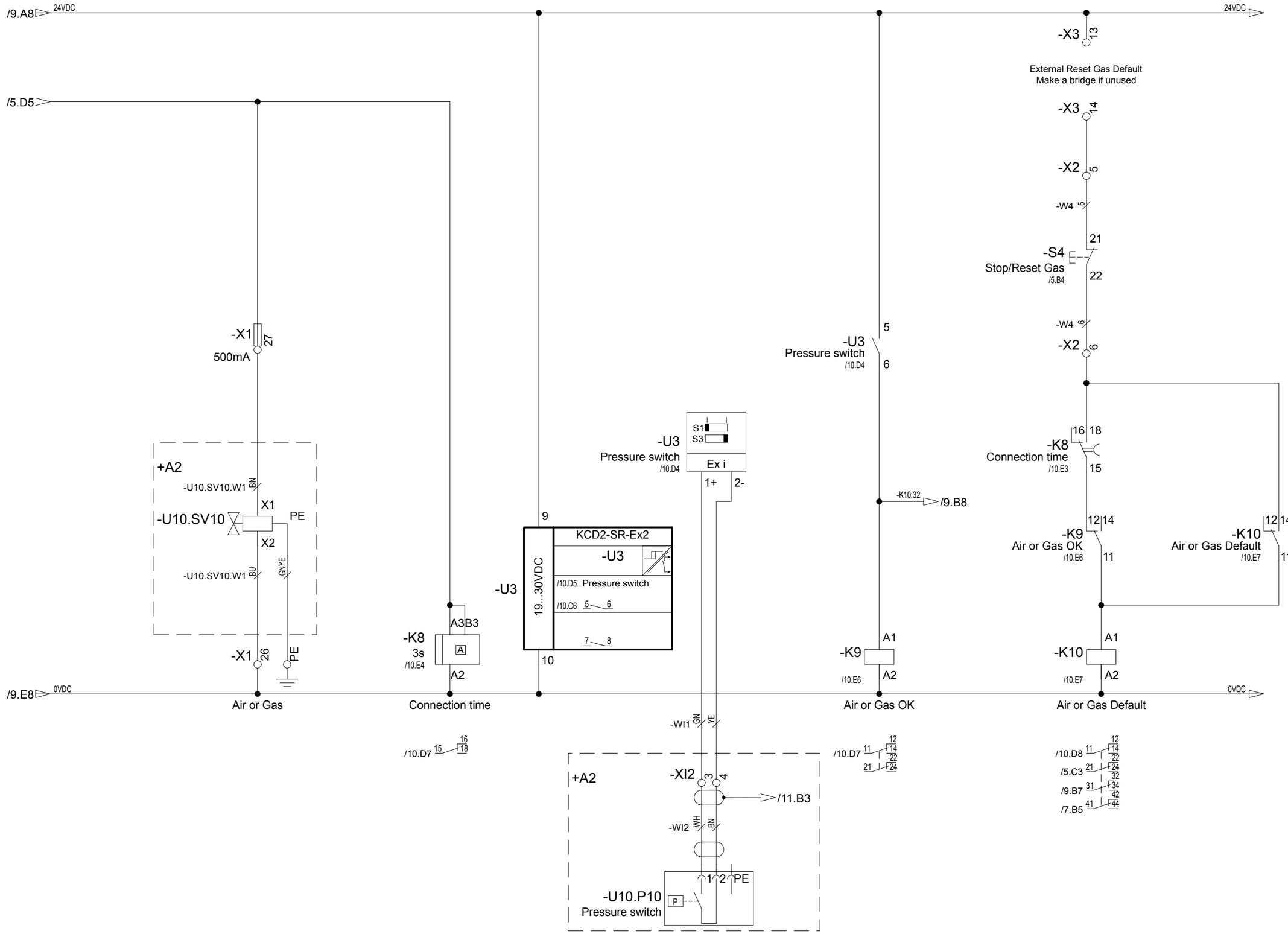


We reserve all rights in this document and in the information contained therein. Reproduction, use or disclosure to third parties without express authority is strictly forbidden.
© Frewitt

| | | | | | |
|---|---|---|---|---|---|
| A | Initial version | | | date | 14.06.2011 |
| B | Project follow-up | 25.07.11 | vri | User | Ige |
| C | Project closure | 06.09.11 | vri | Proved | Ige |
| Status | change | date | name | Standard | |

Novartis Singapore, SG-Singapore
PRO-11-0078
400V,50Hz,3P+N+PE Atex 3D

Origin | Repl. f. | Repl. by

FREWITT
Frewitt SA: Milling and Handling of Powders
P.O.B. 615, CH-1701 Fribourg, SWITZERLAND
tel: +41 26 460 74 00 / fax: +41 26 460 74 01
info@frewitt.com / www.frewitt.com

# 03 - Schematic Air or Gas

Type : DM - MF-3

+A1

465085

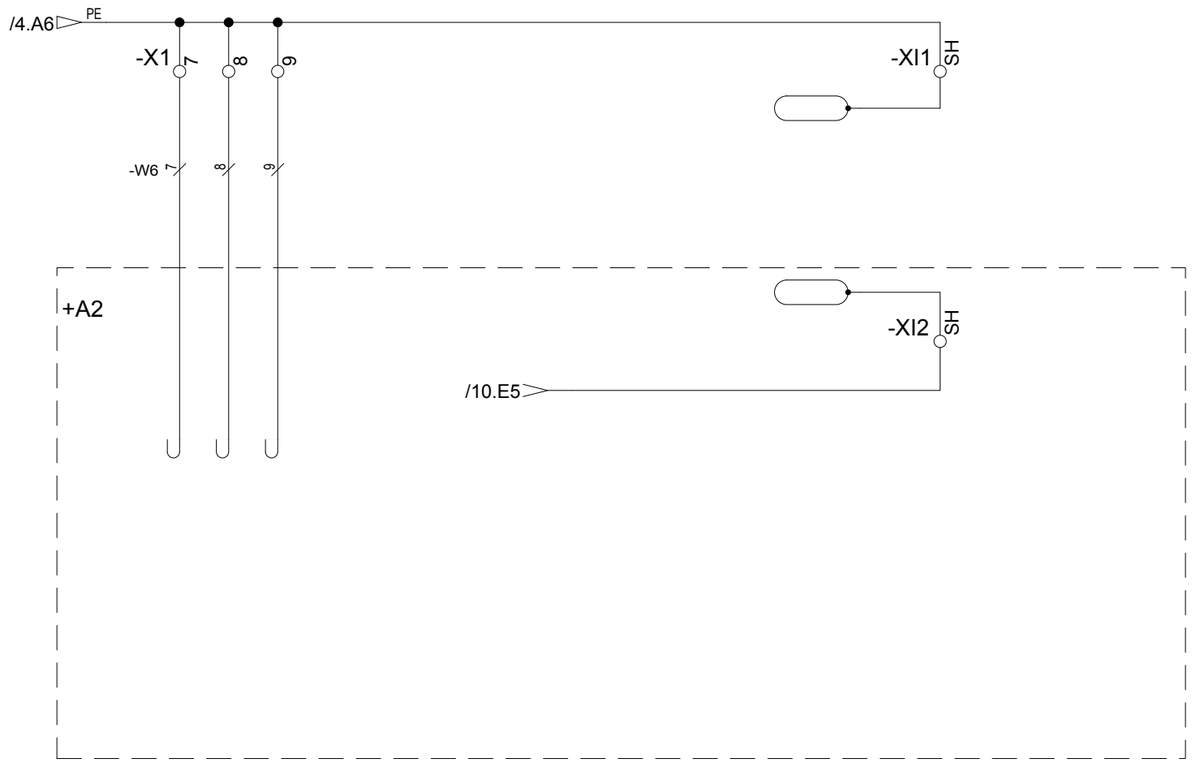


We reserve all rights in this document and in the information contained therein. Reproduction, use or disclosure to third parties without express authority is strictly forbidden.
© Frewitt

| | | | | | |
|---|---|---|---|---|---|
| A | Initial version | | | date | 14.06.2011 |
| B | Project follow-up | 25.07.11 | vri | User | lge |
| C | Project closure | 06.09.11 | vri | Proved | lge |
| Status | change | date | name | Standard | |

Novartis Singapore, SG-Singapore
PRO-11-0078
400V,50Hz,3P+N+PE Atex 3D

Origin | Repl. f. | Repl. by

FREWITT
Frewitt SA: Milling and Handling of Powders
P.O.B. 615, CH-1701 Fribourg, SWITZERLAND
tel: +41 26 460 74 00 / fax: +41 26 460 74 01
info@frewitt.com / www.frewitt.com

# 03 - Schematic Spare Cable

Type : DM - MF-3

+A1

465085

terminal strip

# -X0

| cable type | cable designations | | | | | | | | |
|---|---|---|---|---|---|---|---|---|---|
| | Placement in Schematics | /4.C3 | /4.C1 | /4.C1 | /4.C2 | /4.C2 | /4.C2 | /4.C2 | |
| | target Internal | : . | :1 | :3 | :5 | :3 | :PE | : . | |
| | | +A1 -PE1 | +A1 -Q1 | +A1 -Q1 | +A1 -Q1 | +A1 -Q3 | +A1 -Q1 | +A1 -PE1 | |
| | jumpers | | | | | | | | |
| | terminal number | PE | L1 | L2 | L3 | N | PE | | |
| | potential | PE | L1 | L2 | L3 | N | PE | PE | |
| | target External | :PE | :L1 | :L2 | :L3 | :N | :PE | | |
| | | +A2 -M10 | -X6 | -X6 | -X6 | -X6 | -X6 | | |
| cable type | cable designations | | | | | | | | |
| H05VV-F Td 4G2.5 | -W3 | GNYE | | | | | | | |
| H07RN-F Gdv 5G2.5 | -W1 | | BN | BK | GY | BU | GNYE | | |

Terminal type

| | |
|---|---|
| terminal | UK 6 N [ L1 - L3 ] |
| terminal | UK 6 N BU [ N ] |
| terminal | USLKG 6 N [ PE - PE ] |

We reserve all rights in this document and in the information contained therein. Reproduction, use or disclosure to third parties without express authority is strictly forbidden.
© Frewitt

| | | | | | | | | |
|---|---|---|---|---|---|---|---|---|
| A | Initial version | | | date | 14.06.2011 | Novartis Singapore, SG-Singapore<br>PRO-11-0078<br>400V,50Hz,3P+N+PE Atex 3D | 04 - Terminals Block<br>-X0 | Type : DM - MF-3<br>465085 |
| B | Project follow-up | 25.07.11 | vri | User | lge | | | +A1 |
| C | Project closure | 06.09.11 | vri | Proved | lge | | | Page 12 / 19 |
| Status | change | date | name | Standard | | Origin / Repl. f. / Repl. by | | |

FREWITT
Frewitt SA: Milling and Handling of Powders
P.O.B. 615, CH-1701 Fribourg, SWITZERLAND
tel: +41 26 460 74 00 / fax: +41 26 460 74 01
info@frewitt.com / www.frewitt.com

# terminal strip -X1

Cable (top): DIN CY 3x0.25 — -W8 (cable type / cable designations)

| terminal number | Placement in Schematics | target Internal | -W8 (DIN CY 3x0.25) | jumpers | potential | target External | -W6 (TT flex NK 10G0.5) | -W7 (DIN CY 3x0.25) | -G20.W1 (4x0.75) | -G30.W1 (4x0.75) | +A3 -G40.W1 (4x0.75) | +A2 -U10.SV10.W1 (3G1) |
|---|---|---|---|---|---|---|---|---|---|---|---|---|
| PE | /6.B5 | +A1 -PE1 :: | | | PE | +A2 -M10 :PE | GNYE | | | | | |
| 1 | /7.C2 | | | | 24VDC_S | +A2 -M10 :13 | 1 | | | | | |
| 2 | /7.D2 | | | | | +A2 -M10 :14 | 2 | | | | | |
| 3 | /6.B4 | +A1 -P2 :+ | | | | +A2 -M10 :8 | 3 | | | | | |
| 4 | /6.D4 | +A1 -K6 :T1 | | | | +A2 -M10 :: | 4 | | | | | |
| 5 | /6.D4 | +A1 -K6 :T2 | | | | +A2 -M10 :: | 5 | | | | | |
| 6 | /6.D4 | | | | 0VDC | +A2 -M10 :: | 6 | | | | | |
| 7 | /11.A2 | | | ● | PE | +A2 -Res2 :: | 7 | | | | | |
| 8 | /11.A2 | | | ● | PE | +A2 -Res2 :: | 8 | | | | | |
| 9 | /11.A2 | | | ● | PE | +A2 -Res2 :: | 9 | | | | | |
| 10 | /6.C6 | +A1 -R1 :3 | WH | | | +A2 -M10 :1 | | WH | | | | |
| 11 | /6.C6 | +A1 -R1 :2 | BN | | | +A2 -M10 :2 | | BN | | | | |
| 12 | /6.C6 | +A1 -R1 :1 | GN | | | +A2 -M10 :3 | | GN | | | | |
| PE | | | | | | | | | | | | |
| 13 | /7.D5 | +A1 -K5 :6 | | | | +A3 -G20.1 :4 | | | 4 | | | |
| 14 | /7.D6 | +A1 -K5 :7 | | | | +A3 -G20.1 :3 | | | 3 | | | |
| 15 | /7.D6 | +A1 -K5 :8 | | | | +A3 -G20.1 :2 | | | 2 | | | |
| 16 | /7.D6 | +A1 -K5 :9 | | | | +A3 -G20.1 :1 | | | 1 | | | |
| 17 | /7.D6 | +A1 -K5 :10 | | | | +A3 -G30.1 :4 | | | | 4 | | |
| 18 | /7.D6 | +A1 -K5 :11 | | | | +A3 -G30.1 :3 | | | | 3 | | |
| 19 | /7.D6 | +A1 -K5 :12 | | | | +A3 -G30.1 :2 | | | | 2 | | |
| 20 | /7.D6 | +A1 -K5 :13 | | | | +A3 -G30.1 :1 | | | | 1 | | |
| 21 | /7.E6 | +A1 -K5 :21 | | | | +A3 -G40.1 :4 | | | | | 4 | |
| 22 | /7.E6 | +A1 -K5 :20 | | | | +A3 -G40.1 :3 | | | | | 3 | |
| 23 | /7.E6 | +A1 -K5 :19 | | | | +A3 -G40.1 :2 | | | | | 2 | |
| 24 | /7.E6 | +A1 -K5 :18 | | | | +A3 -G40.1 :1 | | | | | 1 | |
| 25 | | | | | | | | | | | | |
| 26 | /10.E3 | | | | 0VDC | +A2 -U10.SV10 :X2 | | | | | | BU |
| 27 | /10.C3 | | | | | +A2 -U10.SV10 :X1 | | | | | | BN |

Terminal type

| | |
|---|---|
| terminal | UKK 3 [ 1 - 26 ] |
| terminal | UK5-HESI 3004100_2 [ 27 ] |
| terminal | UKK 5-PE [ PE - PE ] |

We reserve all rights in this document and in the information contained therein. Reproduction, use or disclosure to third parties without express authority is strictly forbidden. © Frewitt

| Status | change | date | name | | |
|---|---|---|---|---|---|
| A | Initial version | | | date | 14.06.2011 |
| B | Project follow-up | 25.07.11 | vri | User | lge |
| C | Project closure | 06.09.11 | vri | Proved | lge |
| | | | | Standard | |

Novartis Singapore, SG-Singapore
PRO-11-0078
400V,50Hz,3P+N+PE Atex 3D

Origin | Repl. f. | Repl. by

Frewitt SA: Milling and Handling of Powders
P.O.B. 615, CH-1701 Fribourg, SWITZERLAND
tel: +41 26 460 74 00 / fax: +41 26 460 74 01
info@frewitt.com / www.frewitt.com

04 - Terminals Block

-X1

Type : DM - MF-3

465085

+A1

# terminal strip

# -X2

| terminal number | potential | jumpers | target Internal | Placement in Schematics | cable designations | cable type | target External | cable designations | cable type |
|---|---|---|---|---|---|---|---|---|---|
| PE | PE | | | /9.D4 | | | | | |
| 1 | 24VDC | | | /5.A2 | | | +A1 -S1 :11 | | |
| 2 | | | +A1 -X3 :1 | /5.B2 | | | +A1 -S1 :12 | | |
| 3 | | | +A1 -X3 :4 | /5.B3 | | | +A1 -S4 :11 | | |
| 4 | | | | /5.C3 | | | +A1 -S4 :12 | | |
| 5 | | | +A1 -X3 :14 | /10.B7 | | | +A1 -S4 :21 | | |
| 6 | | | | /10.C7 | | | +A1 -S4 :22 | | |
| 7 | | | | /5.C3 | | | +A1 -S5 :3 | | |
| 8 | | | | /5.D3 | | | +A1 -S5 :4 | | |
| 9 | | | +A1 -X3 :8 | /5.B6 | | | +A1 -S2 :11 | | |
| 10 | | | | /5.C6 | | | +A1 -S2 :12 | | |
| 11 | | | +A1 -X3 :12 | /7.B2 | | | +A1 -S2 :21 | | |
| 12 | 24VDC_S | | | /7.C2 | | | +A1 -S2 :22 | | |
| 13 | | | | /5.C6 | | | +A1 -S3 :3 | | |
| 14 | | | | /5.D6 | | | +A1 -S3 :4 | | |
| 15 | | | +A1 -K2 :31 | /9.C6 | | | +A1 -S3 :X1 | | |
| 16 | 0VDC | | | /9.E6 | | | +A1 -S3 :X2 | | |
| 17 | | | +A1 -K10 :31 | /9.C7 | | | +A1 -S5 :X1 | | |
| 18 | | | +A1 -X3 :20 | /9.D3 | | | +A1 -P1 :2+ | WH | Securaflex 1x2x0.75 |
| 19 | | | +A1 -U2 :7- | /9.D3 | | | +A1 -P1 :1- | BN | |
| 20 | | | | | | | | | |
| PE | PE | | +A1 -PE1 : | /9.C8 | | | +A1 -PE1 : | GNYE | TT flex NK 18G0.5 |
| PE | PE | | +A1 -PE1 : | /10.E3 | | | +A2 -U10.SV10 :PE | GNYE | 3G1 |

Terminal type

terminal UKK 3 [ 1 - 20 ]

terminal UKK 5-PE [ PE - PE ]

terminal

We reserve all rights in this document and in the information contained therein. Reproduction, use or disclosure to third parties without express authority is strictly forbidden.
© Frewitt

| | | | | | | | |
|---|---|---|---|---|---|---|---|
| A | Initial version | | | date | 14.06.2011 | Novartis Singapore, SG-Singapore<br>PRO-11-0078<br>400V,50Hz,3P+N+PE Atex 3D | 04 - Terminals Block<br>-X2 |
| B | Project follow-up | 25.07.11 | vri | User | lge | | |
| C | Project closure | 06.09.11 | vri | Proved | lge | | |
| Status | change | date | name | Standard | | Origin / Repl. f. / Repl. by | |

FREWITT
Frewitt SA: Milling and Handling of Powders
P.O.B. 615, CH-1701 Fribourg, SWITZERLAND
tel: +41 26 460 74 00 / fax: +41 26 460 74 01
info@frewitt.com / www.frewitt.com

Type : DM - MF-3

465085

+A1

terminal strip

# -X3

| cable type | cable designations | Placement in Schematics | target Internal | jumpers | terminal number | potential | target External |
|---|---|---|---|---|---|---|---|
| | | | | | PE | | |
| | | /5.B2 | +A1 -X2 | | 1 | | |
| | | /5.C2 | +A1 -K5 | | 2 | | |
| | | /5.A3 | | | 3 | | |
| | | /5.B3 | +A1 -X2 | | 4 | | |
| | | /5.C5 | | | 5 | | |
| | | /5.D5 | | | 6 | | |
| | | /5.A6 | | | 7 | | |
| | | /5.B6 | +A1 -X2 | | 8 | | |
| | | /5.C7 | | | 9 | | |
| | | /5.D7 | | | 10 | | |
| | | /7.A2 | | | 11 | 24VDC | |
| | | /7.B2 | +A1 -X2 | | 12 | | |
| | | /10.A7 | | | 13 | 24VDC | |
| | | /10.B7 | +A1 -X2 | | 14 | | |
| | | /9.E5 | +A1 -K1 | | 15 | | |
| | | /9.E4 | +A1 -K1 | | 16 | | |
| | | /9.E5 | +A1 -K11 | | 17 | | |
| | | /9.E5 | +A1 -K11 | | 18 | | |
| | | /9.D3 | +A1 -U2 | | 19 | | |
| | | /9.D3 | +A1 -X2 | | 20 | | |
| | | | | | PE | | |

| cable type | cable designations |
|---|---|
| | |
| | |
| | |
| | |
| | |
| | |
| | |
| | |
| | |

Terminal type

terminal UKK 3 [ 1 - 20 ]

terminal UKK 5-PE [ PE - PE ]

terminal

We reserve all rights in this document and in the information contained therein. Reproduction, use or disclosure to third parties without express authority is strictly forbidden.
© Frewitt

| | | | | | | | | | |
|---|---|---|---|---|---|---|---|---|---|
| A | Initial version | | | date | 14.06.2011 | Novartis Singapore, SG-Singapore<br>PRO-11-0078<br>400V,50Hz,3P+N+PE Atex 3D | Frewitt SA: Milling and Handling of Powders<br>P.O.B. 615, CH-1701 Fribourg, SWITZERLAND<br>tel: +41 26 460 74 00 / fax: +41 26 460 74 01<br>info@frewitt.com / www.frewitt.com | 04 - Terminals Block<br>-X3 | Type : DM - MF-3<br>465085 | +A1 |
| B | Project follow-up | 25.07.11 | vri | User | Ige | | | | | |
| C | Project closure | 06.09.11 | vri | Proved | Ige | | | | | Page 15 / 19 |
| Status | change | date | name | Standard | | Origin | Repl. f. | Repl. by | | |

terminal strip

# -XI2

| | | | | | | | | | | |
|---|---|---|---|---|---|---|---|---|---|---|
| | | | | | | | | | | |
| | | | | | | | | | | |
| | | | | | | | | | | |
| Securaflex 1x2x0.75 | -WI2 | | | | WH | BN | SH | | | |
| 2x0.34 | -S10.W1 | | BN | BU | | | | | | |
| cable type | cable designations | | | | | | | | | |
| | Placement in Schematics | | /9.E2 | /9.E2 | /10.E5 | /10.E5 | /11.B4 | | | |
| | target Internal | | :+ +A2 -S10 | :- +A2 -S10 | :1 +A2 -U10.P10 | :2 +A2 -U10.P10 | | | | |
| | jumpers | | | | | | | | | |
| | terminal number | PE | 1 | 2 | 3 | 4 | SH | PE | | |
| | potential | | | | | | PE | | | |
| | target External | | :1+ +A1 -U2 | :3- +A1 -U2 | :1+ +A1 -U3 | :2- +A1 -U3 | | | | |
| cable type | cable designations | | | | | | | | | |
| Securaflex 2x2x0.75 | -WI1 | | WH | BN | GN | YE | SH | | | |

terminal UK 3 N BU [ 1 - 4 , SH ]
terminal USLKG 3 [ PE - PE ]
terminal

Terminal type

We reserve all rights in this document and in the information contained therein. Reproduction, use or disclosure to third parties without express authority is strictly forbidden.
© Frewitt

| | | | | | | | | |
|---|---|---|---|---|---|---|---|---|
| A | Initial version | | | date | 14.06.2011 | Novartis Singapore, SG-Singapore<br>PRO-11-0078<br>400V,50Hz,3P+N+PE Atex 3D | 04 - Terminals Block | Type : DM - MF-3 |
| B | Project follow-up | 25.07.11 | vri | User | lge | | | |
| C | Project closure | 06.09.11 | vri | Proved | lge | | -XI2 | 465085 |
| Status | change | date | name | Standard | | Origin / Repl. f. / Repl. by | | +A2 / Page 16 / 19 |

FREWITT
Frewitt SA: Milling and Handling of Powders
P.O.B. 615, CH-1701 Fribourg, SWITZERLAND
tel: +41 26 460 74 00 / fax: +41 26 460 74 01
info@frewitt.com / www.frewitt.com

# Bill of material

| Article Number | Description | Manufacturer | Reference | Device | Quantity |
|---|---|---|---|---|---|
| 438585 | Lock bracket | FREWITT | 438585 | -+A1 | 2 |
| 461232 | Electrical cabinet | FREWITT | 461232 | -+A1 | 1 |
| 462084 | Power supply | MEANWELL | WDR-120-24 | -G1 | 1 |
| 404567 | Magnet | ELOBAU | 304 200 00 V2 | -G10 | 1 |
| 404568 | Magnet safety switch | ELOBAU | 671 271 MU0 5 | -G10 | 1 |
| 404567 | Magnet | ELOBAU | 304 200 00 V2 | -G20 | 1 |
| 404568 | Magnet safety switch | ELOBAU | 671 271 MU0 5 | -G20 | 1 |
| 404567 | Magnet | ELOBAU | 304 200 00 V2 | -G30 | 1 |
| 404568 | Magnet safety switch | ELOBAU | 671 271 MU0 5 | -G30 | 1 |
| 404567 | Magnet | ELOBAU | 304 200 00 V2 | -G40 | 1 |
| 404568 | Magnet safety switch | ELOBAU | 671 271 MU0 5 | -G40 | 1 |
| 456536 | Relay | SIEMENS | LZS:RT4A4L24 | -K1 | 1 |
| 456535 | Relay | SIEMENS | LZS:PT5A5L24 | -K2 | 1 |
| 456536 | Relay | SIEMENS | LZS:RT4A4L24 | -K3 | 1 |
| 405381 | Timing relay | SIEMENS | 3RP1505-1AP30 | -K4 | 1 |
| 404645 | Safety relay | ELOBAU | 462 121 G1 U | -K5 | 1 |
| 454256 | PTC Relay | SIEMENS | 3RN10 11-1BB00 | -K6 | 1 |
| 405381 | Timing relay | SIEMENS | 3RP1505-1AP30 | -K8 | 1 |
| 456536 | Relay | SIEMENS | LZS:RT4A4L24 | -K9 | 1 |
| 456535 | Relay | SIEMENS | LZS:PT5A5L24 | -K10 | 1 |
| 456536 | Relay | SIEMENS | LZS:RT4A4L24 | -K11 | 1 |
| 461222 | Integralmotor | LEROY-SOMER | LSPX90S VMA31T | -M10 | 1 |
| 429506 | Digital display | PR ELECTRONICS | 5531B | -P1 | 1 |
| 463735 | Hour counter | ABB | E233-12/48 | -P2 | 1 |
| 404850 | Safety switch | TELEMECANIQUE | VCF-01 | -Q1 | 1 |
| 404851 | Terminal protection | TELEMECANIQUE | VZ-8 | -Q1 | 2 |
| 456530 | Motor Circuit breaker | SIEMENS | 3RV10211EA15 | -Q2 | 1 |
| 457098 | Protection switch | SIEMENS | 5SY6 206-7 | -Q3 | 1 |
| 456534 | Contactor | SIEMENS | 3RT10241BB44 | -Q4 | 1 |

We reserve all rights in this document and in the information contained therein. Reproduction, use or disclosure to third parties without express authority is strictly forbidden.
© Frewitt

| | | | | | | | | |
|---|---|---|---|---|---|---|---|---|
| A | Initial version | | | date | 14.06.2011 | Novartis Singapore, SG-Singapore<br>PRO-11-0078<br>400V,50Hz,3P+N+PE Atex 3D | 05 - Bill of material | Type : DM - MF-3 |
| B | Project follow-up | 25.07.11 | vri | User | lge | | | |
| C | Project closure | 06.09.11 | vri | Proved | lge | | | 465085 |
| Status | change | date | name | Standard | | Origin / Repl. f. / Repl. by | | Page 17 / 19 |

FREWITT
Frewitt SA: Milling and Handling of Powders
P.O.B. 615, CH-1701 Fribourg, SWITZERLAND
tel: +41 26 460 74 00 / fax: +41 26 460 74 01
info@frewitt.com / www.frewitt.com

# Bill of material

| Article Number | Description | Manufacturer | Reference | Device | Quantity |
|---|---|---|---|---|---|
| 411869 | Head for potentiometer | TELEMECANIQUE | ZB4 BD912 | -R1 | 1 |
| 457636 | Potentiometer | RADIOHM | P20C4K7-50F1 | -R1 | 1 |
| 404852 | Emergency-Stop button | TELEMECANIQUE | XB4-BS542 | -S1 | 1 |
| 404857 | "EMERGENCY-STOP" label | TELEMECANIQUE | ZBY-9330 | -S1 | 1 |
| 409597 | Auxiliary contact | TELEMECANIQUE | ZBE-102 | -S1 | 1 |
| 409597 | Auxiliary contact | TELEMECANIQUE | ZBE-102 | -S2 | 2 |
| 416899 | Pushbutton | TELEMECANIQUE | XB4-BA21 | -S2 | 1 |
| 431179 | Illuminated pushbutton | TELEMECANIQUE | XB4-BW31B5 | -S3 | 1 |
| 409597 | Auxiliary contact | TELEMECANIQUE | ZBE-102 | -S4 | 2 |
| 416899 | Pushbutton | TELEMECANIQUE | XB4-BA21 | -S4 | 1 |
| 431179 | Illuminated pushbutton | TELEMECANIQUE | XB4-BW31B5 | -S5 | 1 |
| 406886 | Proximity Switch | PEPPERL+FUCHS | NCB 1.5-8GM25-NO | -S10 | 1 |
| 422164 | Proximity Switch support | FREWITT | 422164 | -S10 | 1 |
| 417735 | f/l converter | PEPPERL+FUCHS | KFU8-UFC-Ex1.d | -U2 | 1 |
| 442787 | Ex-i Switch Amplifier | PEPPERL+FUCHS | KCD2-SR-Ex2 | -U3 | 1 |
| 411946 | Ex-i Switch Amplifier | PEPPERL+FUCHS | KFD2-SR2-Ex2.W | -U5 | 1 |
| 453536 | Pneumat. preparation unit | Frewitt | 453536 | -U10 | 1 |
| => | Pressure switch | UNIVER | 405 002 112 11 | -U10.P10 | 1 |
| => | Solenoid valve | ASCO JOUCOMATIC | PV G356A002VMS | -U10.SV10 | 1 |
| 435273 | Cable | HEINIGER | 115 120 520 | -W1 | 1 |
| 403952 | Cable | HEINIGER | 114 020 420 | -W3 | 1 |
| 435708 | Cable | HEINIGER | 888 830 183 | -W4 | 1 |
| 451300 | Cable | HEINIGER | 777 923 002 | -W5 | 1 |
| 435710 | Cable | HEINIGER | 888 830 103 | -W6 | 1 |
| 412701 | Cable | HEINIGER | 999 891 033 | -W7 | 1 |
| 412701 | Cable | HEINIGER | 999 891 033 | -W8 | 1 |
| 451301 | Cable | HEINIGER | 777 923 022 | -WI1 | 1 |
| 451300 | Cable | HEINIGER | 777 923 002 | -WI2 | 1 |
| 456540 | Terminal | PHOENIX CONTACT | 3004524 | -X0 | 3 |

We reserve all rights in this document and in the information contained therein. Reproduction, use or disclosure to third parties without express authority is strictly forbidden.
© Frewitt

| | | | | | | | | |
|---|---|---|---|---|---|---|---|---|
| A | Initial version | | | date | 14.06.2011 | Novartis Singapore, SG-Singapore<br>PRO-11-0078<br>400V,50Hz,3P+N+PE Atex 3D | Frewitt SA: Milling and Handling of Powders<br>P.O.B. 615, CH-1701 Fribourg, SWITZERLAND<br>tel: +41 26 460 74 00 / fax: +41 26 460 74 01<br>info@frewitt.com / www.frewitt.com | 05 - Bill of material |
| B | Project follow-up | 25.07.11 | vri | User | lge | | | |
| C | Project closure | 06.09.11 | vri | Proved | lge | | | |
| Status | change | date | name | Standard | | Origin / Repl. f. / Repl. by | | |

Type : DM - MF-3

465085

# Bill of material

| Article Number | Description | Manufacturer | Reference | Device | Quantity |
|---|---|---|---|---|---|
| 456542 | Terminal | PHOENIX CONTACT | 0442079 | -X0 | 2 |
| 457042 | Terminal | PHOENIX CONTACT | 3004977 | -X0 | 1 |
| 414554 | Fuse Terminal | PHOENIX CONTACT | UK5-HESI | -X1 | 1 |
| 456543 | Terminal | PHOENIX CONTACT | 2770011 | -X1 | 13 |
| 456544 | Terminal | PHOENIX CONTACT | 2774211 | -X1 | 2 |
| 464300 | Fuse | SCHURTER | 0034.3114 | -X1 | 1 |
| 456543 | Terminal | PHOENIX CONTACT | 2770011 | -X2 | 10 |
| 456544 | Terminal | PHOENIX CONTACT | 2774211 | -X2 | 2 |
| 456543 | Terminal | PHOENIX CONTACT | 2770011 | -X3 | 10 |
| 456544 | Terminal | PHOENIX CONTACT | 2774211 | -X3 | 2 |
| 406306 | Female connector | AMPHENOL | C016 20G003 100 12 | -X5 | 1 |
| 406308 | Protection cap | AMPHENOL | C016 00U000 010 12 | -X5 | 1 |
| 406309 | Protection cap | AMPHENOL | C016 00V000 000 12 | -X5 | 1 |
| 409686 | Male connector | AMPHENOL | T 3108 001 | -X5 | 1 |
| 443449 | Protection cap | BINDER | 16-0565-00-00 | -X5 | 1 |
| 411081 | Female connector | STAHL | 8570/11-506 | -X6 | 1 |
| 411082 | Male connector | STAHL | 8570/12-506 | -X6 | 1 |
| 456548 | Terminal | PHOENIX CONTACT | 3001514 | -XI1 | 1 |
| 456541 | Terminal | PHOENIX CONTACT | 0441083 | -XI2 | 2 |
| 456548 | Terminal | PHOENIX CONTACT | 3001514 | -XI2 | 5 |
| 407586 | Terminal box | STAHL | 8118/212-099 | -XJB1 | 1 |
| 450020 | Terminal box support | FREWITT | 450020 | -XJB1 | 1 |
| | | | | | |
| | | | | | |
| | | | | | |
| | | | | | |
| | | | | | |
| | | | | | |
| | | | | | |

We reserve all rights in this document and in the information contained therein. Reproduction, use or disclosure to third parties without express authority is strictly forbidden.
© Frewitt

| | | | | | | | | | |
|---|---|---|---|---|---|---|---|---|---|
| A | Initial version | | | date | 14.06.2011 | Novartis Singapore, SG-Singapore<br>PRO-11-0078<br>400V,50Hz,3P+N+PE Atex 3D | Frewitt SA: Milling and Handling of Powders<br>P.O.B. 615, CH-1701 Fribourg, SWITZERLAND<br>tel: +41 26 460 74 00 / fax: +41 26 460 74 01<br>info@frewitt.com / www.frewitt.com | 05 - Bill of material | Type : DM - MF-3 |
| B | Project follow-up | 25.07.11 | vri | User | Ige | | | | |
| C | Project closure | 06.09.11 | vri | Proved | Ige | | | | 465085 |
| Status | change | date | name | Standard | | Origin / Repl. f. / Repl. by | | | Page 19 / 19 |

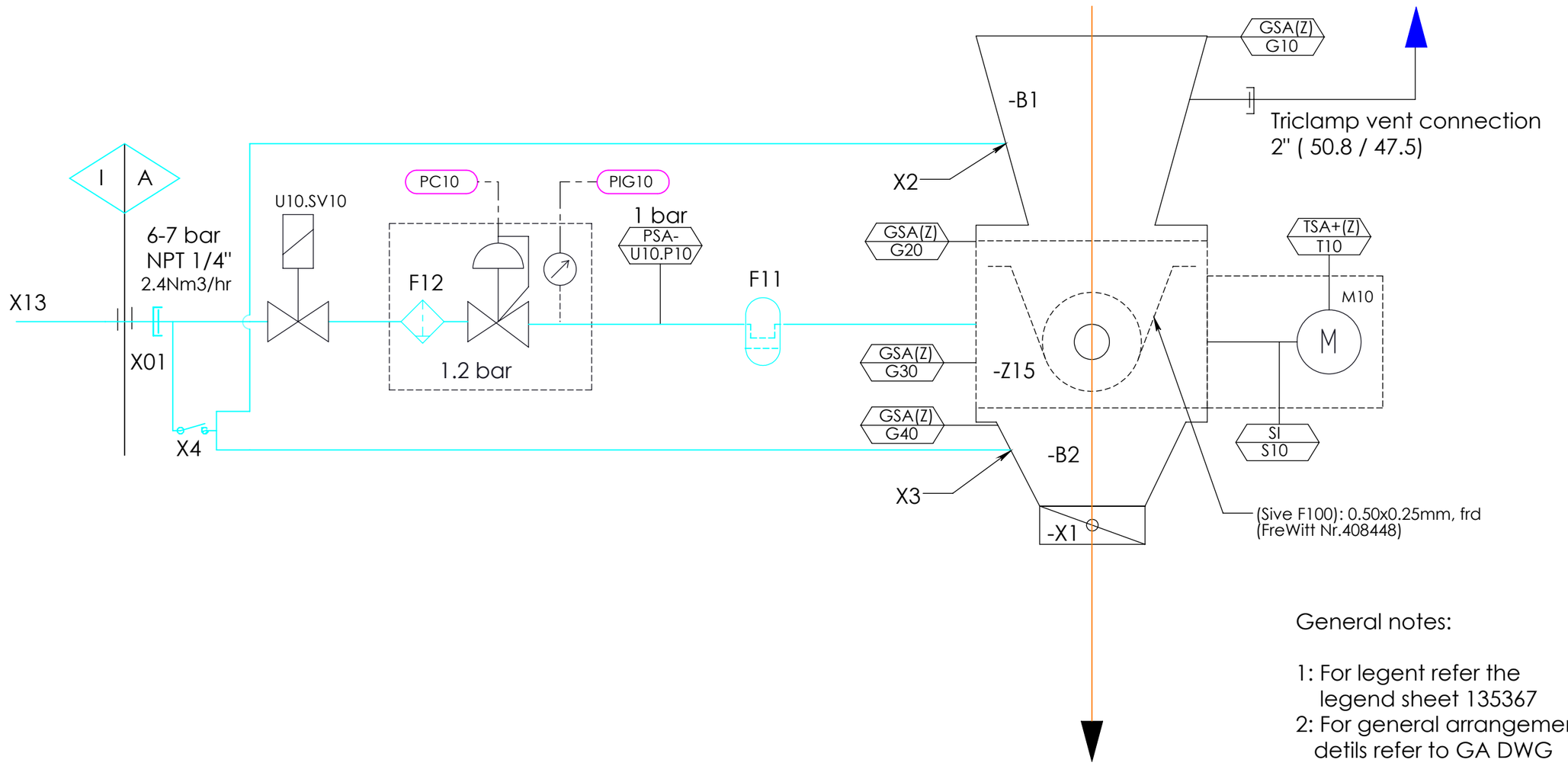


General notes:

1: For legent refer the legend sheet 135367
2: For general arrangement detils refer to GA DWG 465036-LAY

I=Infrastructure
A=Installation
(Z)=Security

# SG.TBP. 202.M.5216

| | | | | | | |
|---|---|---|---|---|---|---|
| ATEX category | Int. II 1G/1D Ext. 3D | | | | Machined dim. | ISO 2768-m |
| Voltage [V] | 400 | Power [kW] | 1.1 | Scale | Welded dim. | ISO 2768-c |
| Frequency [Hz] | 50 | Speed [min-1] | 43-248 | % | Designed | 24/05/2011 ygr |
| R und I PID PRO-11-0078 / MF-3 | | | | | Controlled | 21/07/2011 ygr |
| | | | | A3 | Revised | 21/07/2011 ygr |

Any and all information received by you from us shall be held and kept confidential and shall not be disclosed by you to any third party except with prior written consent of FREWITT SA.

Frewitt SA: Milling and Handling of Powders
P.O.B. 615, CH-1701 Fribourg, SWITZERLAND
tel: +41 26 460 74 00 / fax: +41 26 460 74 01
info@frewitt.com / www.frewitt.com

| | | |
|---|---|---|
| 465041 | Page | Ver. |
| | 1/1 | C |

**Customer:** Novartis Pharma Singapore

**Serial-Nr.** MF-3 11007821034

# PID Schema 465041 Rev. C

| R&I Article<br>R&I Artikel<br>R&I Article | Article N°<br>Artikel Nr.<br>Article ID. | Description<br>Beschreibung<br>Description | Fournisseur<br>Hersteller<br>Supplier | Quantité<br>Menge<br>Quantity |
|---|---|---|---|---|
| F11 | 457102 | Sterilfilter for air – P-SRF N 0006 G ¼“ – Element P-SRF N 03/10 | Donaldson | 1 |
| F12 | (453536) | Filter F.01 HA4 G1/4 | UNIVER | 1 |
| G10 | 404567 | Magnet 304 200 00 V2 | ELOBAU | 1 |
| G10 | 404568 | Magnetic safety awitch 671 271 MU0 5 | ELOBAU | 1 |
| G20 | 404567 | Magnet 304 200 00 V2 | ELOBAU | 1 |
| G20 | 404568 | Magnetic safety awitch 671 271 MU0 5 | ELOBAU | 1 |
| G30 | 404567 | Magnet 304 200 00 V2 | ELOBAU | 1 |
| G30 | 404568 | Magnetic safety awitch 671 271 MU0 5 | ELOBAU | 1 |
| G40 | 404567 | Magnet 304 200 00 V2 | ELOBAU | 1 |
| G40 | 404568 | Magnetic safety awitch 671 271 MU0 5 | ELOBAU | 1 |
| X1 | 456641 | Valve | FreWitt | 1 |
| M10 | 461222 | Motor 4P LSPX90S 1.0kW Ex II2D IP65 T125°C 50Hz VMA31T | LEROY-SOMER SA | 1 |
| PC10 | (453536) | Regulator R.01 G1/4 0.2-6 bar | TECSIS | 1 |
| PIG10 | (453536) | Manometer P1415B073001 G1/8 | UNIVER | 1 |
| S10 | 406886 | Proximity Switches EXI M8 NCB 1,5-8GM25-NO | PEPPERL+FUCHS | 1 |
| T10 | (452856) | PTC Sensor | (LEROY-SOMER SA) | 1 |
| U10.P10 | (453536) | Pressure Swiches 40500211211 | Layher | 1 |
| U10.SV10 | (453536) | Solenoid valve PV G356A002VMS | ASCO JOUCOMATIC | 1 |
| B1 | 465211 | Inlet funnel | FreWitt | 1 |
| B2 | 465165 | Outlet funnel | FreWitt | 1 |
| Z15 | 465107 | mill MF-3 | FreWitt | 1 |
| F100 | 408448 | sieve 0.50x0.25mm, frd | FreWitt | 1 |
| X2 | 436876 | Vibrator NTP25B+C SE Inox | Netter | 1 |
| X3 | 436876 | Vibrator NTP25B+C SE Inox | Netter | 1 |
| X4 | 461592 | switch ON / OFF | Trigress armaturen AG | 1 |
| X01 | - | NPT 1/4" | Frewitt | 1 |

Voir documents suivants. Siehe folgende Dokumente. See following documents

Professional Milling and Handling of Powders

French version only

# Data sheet 461222

## 461222

**Date :** 13 sept. 2010

Induction motor Varmeca with options

**4P LSPX90S 1,0kW Ex II2D Ex tD A21 IP65 T125°C B5 230VD/400VY 50Hz VMA31T**

CEILS / FF130 ; Metal cover ; Thermal protection 1xPTC ;

**Utilisation :** Environment ATEX standard - Dust ; Ambiance Non corrosive ; Zone 21 - Dusty ; Type of protection Ex II2D Ex tD A21 IP65 T125°C ; General applications ; **Ambient temperature -16 +50 °C** ; Maximum altitude 1000 m ; Maximum surface temperature 125°C

**Motor caracteristics :** Aluminium alloy housing ; Cast iron DE endshield ; Aluminium alloy NDE endshield.

| | | | |
|---|---|---|---|
| Net price excluding VAT (€) | | Discount (%) | |
| **Ex-works net price excluding VAT (€)** | | Copper surcharge (€) | |

### Motor definition

| | | | |
|---|---|---|---|
| Protection type | Ex II2D Ex tD A21 IP65 T125°C | Rated speed (min-1) | 1429 |
| Efficiency class | - | Application | General applications |
| Number of phases | 3 | Main voltage (V) | 400 |
| Number of speed | VVGp | Connection | DY |
| Polarity | 4P | Starting type | Controlled |
| Motor serie | LSPX | Motor winding (V) | 230VD/400VY |
| Frame size (mm) | 90 | Rated Frequency (Hz) | 50 |
| Lenght code | S | Operation position | IM3001(IMB5) |
| **HS rated power (kW)** | 1.00 | Index of protection | IP65 |
| LS rated power (kW) | - | Index of cooling | IC411 |
| Starting torque (N.m) | 13.00 | Insulation class | F |

### Inverter definition

| | | | |
|---|---|---|---|
| Inverter serie | VMA3 | Inverter caliber | 110 |
| Inverter size | 1 | Supply voltage | T |

### Common definitions

| | |
|---|---|
| Paint shade | RAL1007 - Yellow |
| Paint system | Ia (1 polyurethane coat 20/30 microns) |

### Motor mechanical interface

| | | | |
|---|---|---|---|
| Mounting flange | FF130 | Second shaft extension | - |
| Drive end shaft type | IEC STANDARD shaft end | Diameter NDE shaft (mm) | - |
| Diameter DE shaft (mm) | 24j6 | Second shaft end length (mm) | - |
| Length DE shaft (mm) | 50 | Drive end bearing type | DE ball bearing |
| Shaft material type | Steel shaft | DE bearing | 6205 ZZ C3 |
| Nuance of shaft material | - | DE bearing mounting | Locked |

### Motor electrical interface

| | | | |
|---|---|---|---|
| Connection network type | Terminal box | Number of leeds | - |
| Connection network material | Aluminium alloy | Cable gland material | Brass cable gland |
| Connection network position | A | Main cable glan type | 1xPE CMDEL ISO M16x1.5 |
| Connection network orientation | up | Principal cable gland position | Right (1) |
| Connection network relative position | 0 | Auxiliary cable gland type | - |

It is the user's responsibility to check that his configurator's version is updated.
The above mentioned data are for information, and should be subject to a special agreement from LEROY-SOMER to become contractual.
LEROY-SOMER is reserving the right to change these data without previous notice.

# Data sheet 461222

**N° :** **Date :** 13 sept. 2010

**Induction motor Varmeca with options -** 4P LSPX90S 1,0kW Ex II2D Ex tD A21 IP65 T125°C B5 230VD/400VY 50Hz VMA31T

## Motor options

| | | | |
|---|---|---|---|
| Vibration class | A (25µm; 1.6mm/s; 2.5m/s²) | Cover | Metal cover |
| Balancing type | Half-key (H) | Drip proof cover option | - |
| Impregnation type | < 90% ; -16+40°C (T) | Forced ventilation type | - |
| Thermal protection | 1xPTC | Forced ventilation caracteristics | - |
| Space heater | - | Encoder type | - |
| Draining plugs position | 6H | Encoder caracteristics | - |
| Nameplate material | Aluminium nameplate | Screw material | Steel screw |

## Inverter options

| | | | |
|---|---|---|---|
| Local control | - | Braking resistance | - |
| Fieldbus interface | - | Remote control | - |
| RFI Filter | - | Digital display panel | - |
| Fieldbus interface | - | Encoder feedback module | - |
| Parametring soft | - | Cable link | - |
| Parameter setting | - | Clonning key | - |

## Motor caracteristics

| | | | |
|---|---|---|---|
| Rated speed (min-1) | 1429 | Motor weight (kg) | 15.7 |
| Rated current (A) | 2.5 | NDE bearing | 6204 ZZ C3 |
| No-load current (A) | - | Power factor at 4/4 of the load | 1 |
| Id / In | | Power factor at 3/4 of the load | |
| Rated torque (N.m) | 7_4,7 | Power factor at 2/4 of the load | |
| Starting torque (N.m) | 13 | Efficiency at 4/4 (IEC 60 034-2) of the load (%) | 77,1 |
| Maximum torque (N.m) | | Efficiency at 3/4 (IEC 60 034-2) of the load (%) | |
| Average starting torque (N.m) | | Efficiency at 2/4 (IEC 60 034-2) of the load (%) | |
| Rotor locked time (cold) (s) | | Efficiency at 4/4 (IEC 60 034-2-1) of the load (%) | |
| Unload maximum starting frequency (d/h) | - | Efficiency at 3/4 (IEC 60 034-2-1) of the load (%) | |
| Acoustic pressure level (dB(A)) | 48 | Efficiency at 2/4 (IEC 60 034-2-1) of the load (%) | |
| Moment of inertia J (kg.m2) | 0.0032000 | | |

It is the user's responsibility to check that his configurator's version is updated.
The above mentioned data are for information, and should be subject to a special agreement from LEROY-SOMER to become contractual.
LEROY-SOMER is reserving the right to change these data without previous notice.

# Data sheet 461222

**N° :** **Date :** 13 sept. 2010

**Induction motor Varmeca with options -** 4P LSPX90S 1,0kW Ex II2D Ex tD A21 IP65 T125°C B5 230VD/400VY 50Hz VMA31T

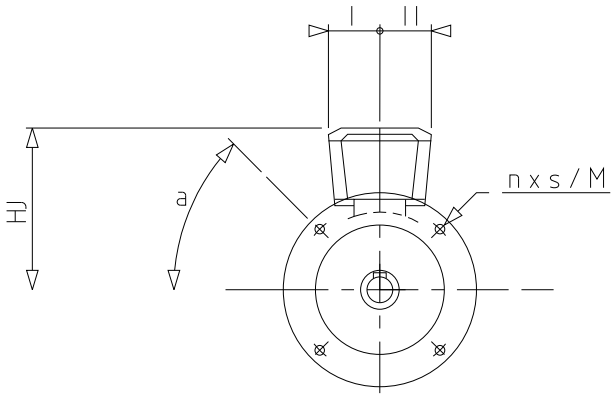


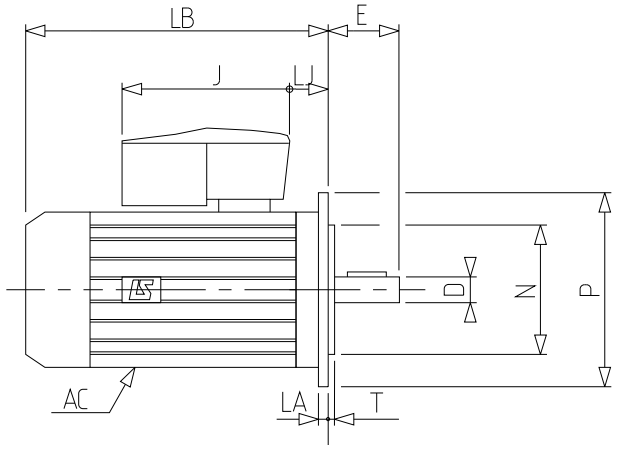


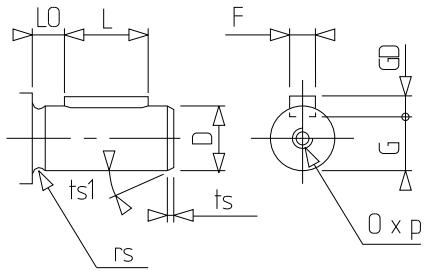


It is the user's responsibility to check that his configurator's version is updated.
The above mentioned data are for information, and should be subject to a special agreement from LEROY-SOMER to become contractual.
LEROY-SOMER is reserving the right to change these data without previous notice.

# Data sheet 461222

**N° :** **Date :** 13 sept. 2010

**Induction motor Varmeca with options -** 4P LSPX90S 1,0kW Ex II2D Ex tD A21 IP65 T125°C B5 230VD/400VY 50Hz VMA31T

| *Motor* (° & mm) | | | |
|---|---|---|---|
| A | - | LO2 | - |
| a | 45 | LP | - |
| AA | - | M | 130 |
| AB | - | N | 110 |
| AC | 190.00 | n | 4 |
| AD | - | O | M8 |
| AD1 | - | OA | - |
| B | - | P | 160 |
| BB | - | p | 19 |
| C | - | pA | - |
| D | 24j6 | rs | 0.5 |
| DA | - | rs2 | - |
| DTP | - | S | 10 |
| E | 50 | T | 3.5 |
| EA | - | ts | 2 |
| EC | - | ts1 | 20 |
| F | 8 | ts2 | - |
| FA | - | ts3 | - |
| G | 20 | x | - |
| GB | - | | |
| GD | 7 | | |
| GF | - | | |
| H | - | | |
| HA | - | | |
| HJ | 202.0 | | |
| I | 75 | | |
| IB | - | | |
| II | 75 | | |
| J | 217 | | |
| JC | - | | |
| JD | - | | |
| JE | - | | |
| JH | - | | |
| JP | - | | |
| K | - | | |
| L | 40 | | |
| L2 | - | | |
| LA | 10 | | |
| LB | 242.0 | | |
| LC | - | | |
| LD | - | | |
| LE | - | | |
| LH | - | | |
| LJ | 30.5 | | |
| LO | 6 | | |

It is the user's responsibility to check that his configurator's version is updated.
The above mentioned data are for information, and should be subject to a special agreement from LEROY-SOMER to become contractual.
LEROY-SOMER is reserving the right to change these data without previous notice.

french version only

FREWITT
DryMilling Division

**FICHE TECHNIQUE**

**1 / 1**

**436111**

| **Type** | : | **GSS04-2NVBR-1D** |
|---|---|---|
| Rapport de réduction | : | i = 9,8 |
| Position de montage | : | A |
| Position de l'arbre de sortie réducteur | : | 3 |
| Entraînement[1] | : | ☐ Avec moteur : |
| | : | **Spécification moteur :** |
| | : | 4 pôles |
| | : | 1.1 kW |
| | : | IP 55 |
| | : | Δ 220 - 240 V 50 Hz |
| | : | Δ 220 - 260 V 60 Hz |
| | : | Y 380 - 415 V 50 Hz |
| | : | Y 380 - 460 V 60 Hz |
| | : | |
| | : | ☒ Sans moteur |
| | | **Spécification moteur :** |
| | : | Flasque IMB14 FT130 (Ø160/130/110) |
| | | *Voir données Lenze pour puissances et vitesses possibles* |
| Lubrification[2] | : | selon normes USDA - H1 - Kluber CLP H1 220 |
| | : | selon normes alimentaires avec certificat |
| Exécution ☐ Normale / Normal ☒ ATEX | | ☒2G ☐3G ☐T3 ☒2D ☐3D ☒T4 125℃ |
| Certificats | | ☒ ATEX |

[1] *Réseau 60 Hz :*

- *La vitesse de sortie du réducteur est augmentée de 20%*
- *A tension égale, le couple de sortie est diminué de 20%*

[2] *Avec de l'huile alimentaire, le couple maximum admissible est diminué de 20% ($M_{2\,adm} = M_{2\,adm} \times 0.8$)*

Professional Milling and Handling of Powders

Voir documents suivants. Siehe folgende Dokumente. See following documents

Professional Milling and Handling of Powders

LEROY SOMER

3847 en - 2009.06 / h

en

This manual is to be given to the end user

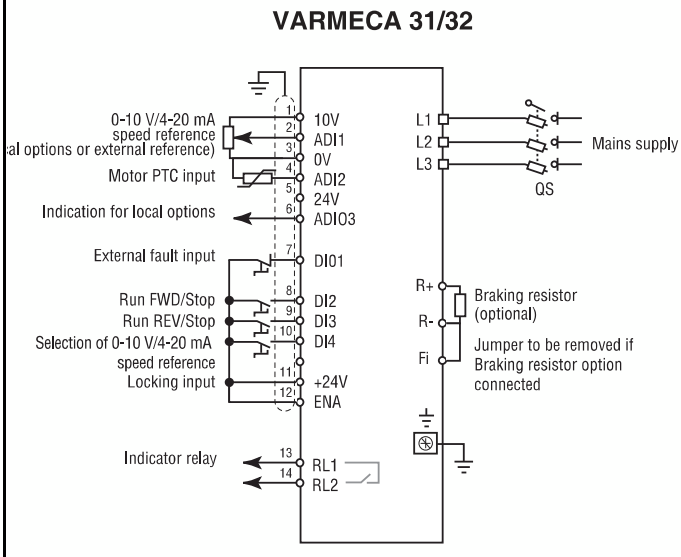


# VARMECA 30

## Variable speed motors and geared motors

### Parameter-setting manual

# VARMECA 30
## Variable speed motors and geared motors

**NOTE**

LEROY-SOMER reserves the right to modify the characteristics of its products at any time in order to incorporate the latest technological developments. The information contained in this document may therefore be changed without notice.

**CAUTION**

For the user's own safety, this VARMECA 30 motor must be connected to an approved earth ( ⏚ terminal).
If accidentally starting the installation is likely to cause a risk to personnel or the machines being driven, it is essential to supply the equipment via a circuit-breaking device (power contactor) which can be controlled via an external safety system (emergency stop, detection of errors on the installation).

The VARMECA 30 motor is fitted with safety devices which, in the event of a fault, control stopping and thus stop the motor. The motor itself can become jammed for mechanical reasons. Voltage fluctuations, and in particular power cuts, may also cause the motor to stop.
The removal of the causes of the shutdown can lead to restarting, which may be dangerous for certain machines or installations. In such cases, it is essential that the user takes appropriate precautions against the motor restarting after an unscheduled stop.
The variable speed drive is designed to be able to supply a motor and the driven machine above its rated speed.
If the motor or the machine are not mechanically designed to withstand such speeds, the user may be exposed to serious danger resulting from their mechanical deterioration. It is important that the user checks that the installation can withstand it, before programming a high speed.
The variable speed drive which is the subject of this manual is designed to be integrated in an installation or an electrical machine, and can under no circumstances be considered to be a safety device. It is therefore the responsibility of the machine manufacturer, the designer of the installation or the user to take all necessary precautions to ensure that the system complies with current standards, and to provide any devices required to ensure the safety of equipment and personnel.

LEROY-SOMER declines all responsibility in the event of the above recommendations not being observed.

# VARMECA 30
## Variable speed motors and geared motors

## SAFETY AND OPERATING INSTRUCTIONS FOR ELECTRICAL ACTUATORS (In accordance with the low voltage directive 73/23/EEC modified by 93/68/EEC)

**• Throughout the manual, this symbol warns of consequences which may arise from inappropriate use of the VARMECA 30, since electrical risks may lead to material or physical damage as well as constituting a fire hazard.**

### 1 - General
Depending on their degree of protection, VARMECA 30þmotors may contain moving parts, as well as hot surfaces, during operation.
Unjustified removal of protection devices, incorrect use, faulty installation or inappropriate operation could represent a serious risk to personnel and equipment.
For further information, consult the manual.
All work relating to transportation, installation, commissioning and maintenance must be performed by experienced, qualified personnel (see IEC 364 or CENELEC HD 384, or DINþVDEþ0100, and also national specifications for installation and accident prevention).
In these basic safety instructions,
qualified personnel means persons competent to install, mount, commission and operate the product and possessing the relevant qualifications.

### 2 - Use
VARMECA 30 motors are components designed for integration in installations or electrical machines.
When integrated in a machine, commissioning must not take place until it has been verified that the machine conforms with directive 89/392/EEC (Machinery Directive).
It is also necessary to comply with standard EN 60204, which stipulates in particular that electrical actuators (which include VARMECA 30) cannot be regarded as circuit-breaking devices and certainly not as isolating switches.
Commissioning can take place only if the requirements of the Electromagnetic Compatibility Directive (89/336/EEC, modified by 92/31/EEC) are met.
VARMECA 30 motors meet the requirements of the Low Voltage Directive 73/23/EEC, modified by 93/68/EEC. The harmonised standards of the DIN VDE 0160 series in connection with standard VDE 0660, part 500 and EN 60146/ VDE 0558 are also applicable.
The technical characteristics and instructions concerning the connection conditions specified on the nameplate and in the documentation provided must be observed without fail.

### 3 - Transportation, storage
All instructions concerning transportation, storage and correct handling must be observed.
The climatic conditions specified in the technical manual must be observed.

### 4 - Installation
The installation and cooling of equipment must comply with the specifications in the manual supplied with the product.
VARMECA 30 motors must be protected against excessive stress. In particular, there must be no damage to parts and/or modification of the clearance between components during transportation and handling. Avoid touching the electronic components and contact parts.
VARMECA 30 motors contain parts which are sensitive to electrostatic stress and may be easily damaged if handled incorrectly. Electrical components must not be exposed to mechanical damage or destruction (risks to health!).

### 5 - Electrical connection
When work is performed on VARMECA 30 motors which are powered up, national accident prevention specifications must be respected.
The electrical installation must comply with the relevant specifications (for example conductor cross-sections, protection via fused circuit-breaker, connection of protective conductor). More detailed information is given in the manual.
Instructions for an installation which meets the requirements for electromagnetic compatibility, such as screening, earthing, presence of filters and correct insertion of cables and conductors, are given in the documentation supplied with the VARMECA 30. These instructions must be followed in all cases, even if the VARMECA 30 carries the CE mark. Adherence to the limits given in the EMC legislation is the responsibility of the manufacturer of the installation or the machine.

### 6 - Operation
Installations incorporating VARMECA 30 motors must be fitted with additional protection and monitoring devices as laid down in the current relevant safety regulations: law on technical equipment, accident prevention regulations, etc. Modification of VARMECA 30 motors using control software is permitted.
Active parts of the device and live power connections must not be touched immediately after the VARMECA 30 is powered down, as the capacitors may still be charged. In view of this, the warnings fixed to VARMECA 30 motors must be observed. During operation, all doors and protective covers must remain closed.

### 7 - Servicing and maintenance
Refer to the manufacturer's documentation.

# VARMECA 30

## Variable speed motors and geared motors

NOTE

# VARMECA 30

## Variable speed motors and geared motors

CONTENTS

**1 - GENERAL INFORMATION ..... 6**
1.1 - Operating principle ..... 6
1.2 - General characteristics ..... 6
1.3 - Dimensions of the LCD KEYPAD micro console ..... 6

**2 - COMMISSIONING using THE LCD KEYPAD MICRO CONSOLE ..... 7**
2.1 - Installation ..... 7
2.2 - Presentation of the LCD KEYPAD ..... 7
2.3 - Read mode ..... 8
2.4 - Parameter-setting mode via "simplified" menu ..... 9
2.5 - VARMECA 30 parameters accessible in SIMPLIFIED MENU ..... 10
2.6 - Parameter-setting mode via "advanced" menu ..... 51

**3 - SWITCHING TO PROTECTIVE MODE - DIAGNOSTICS ..... 52**

**4 - APPENDIX ..... 54**

en

# 1 - GENERAL INFORMATION

⚠ • The operating characteristics are described in section 2.5 "VARMECA 30 parameters".
• When using the VARMECA 30 parameter-setting tools, the precautions described in the installation and maintenance manual, Ref. 3776, should be applied.

## 1.1 - Operating principle

This manual describes how to access the parameter settings of the VARMECA 30 range via an LCD KEYPAD micro console or VMA SOFT PC software.

Combined with the VARMECA 30, these tools are used for programming, diagnostics and displaying parameters.

## 1.2 - General characteristics

### 1.2.1 - "LCD KEYPAD micro console" option

**The kit comprises:**
- 1 micro console with LCD digital display – 1 line of 12þcharacters, 2 lines of 16 characters, with cable (length = 3þm)
- 1 parameter-setting manual

### 1.2.2 - "VMA SOFT" PC software option

**The kit comprises:**
- 1 connection cable (length = 1.5 m) to connect to the VARMECA 30.

The software can be downloaded from the website : www.leroysomer.com or contact your local sales office.

**Minimum PC configuration:**
- Pentium 700 MHz or equivalent
- 256 Mbytes of RAM - 300 Mbytes on hard disk
- Windows 98 - 2nd edition/NT/2000/XP

**This manual is for use with software versions 1.00 (VMA 31/32), 2.20 (VMA 33/34), 2.00 (LCD KEYPAD console).**

## 1.3 - Dimensions of the LCD KEYPAD micro console

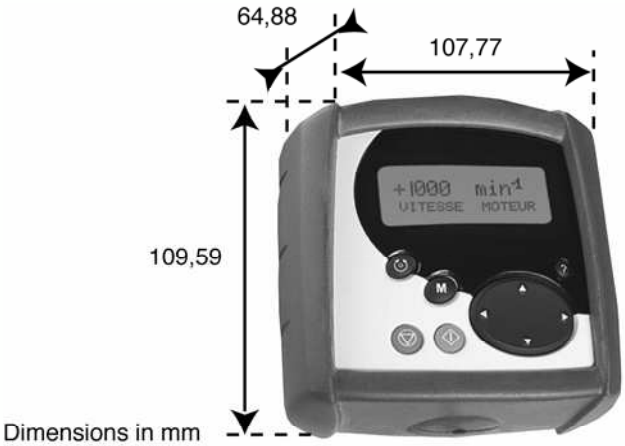


PX LCD

# 2 - COMMISSIONING USING THE LCD KEYPAD MICRO CONSOLE

## 2.1 - Installation

### 2.1.1 - Checks on receipt

When you receive your LCD KEYPAD micro console, make sure that it has not been damaged during transport.
Should damage have occurred please report it to those responsible for its transport.

### 2.1.2 - Connection

- Open the cover of the VARMECA 30.
- Connect the RJ45 plug in the connector on the drive (can be connected while powered up).

⚠ If there are no terminal blocks, a fault appears on power-up: "User 1, fault".

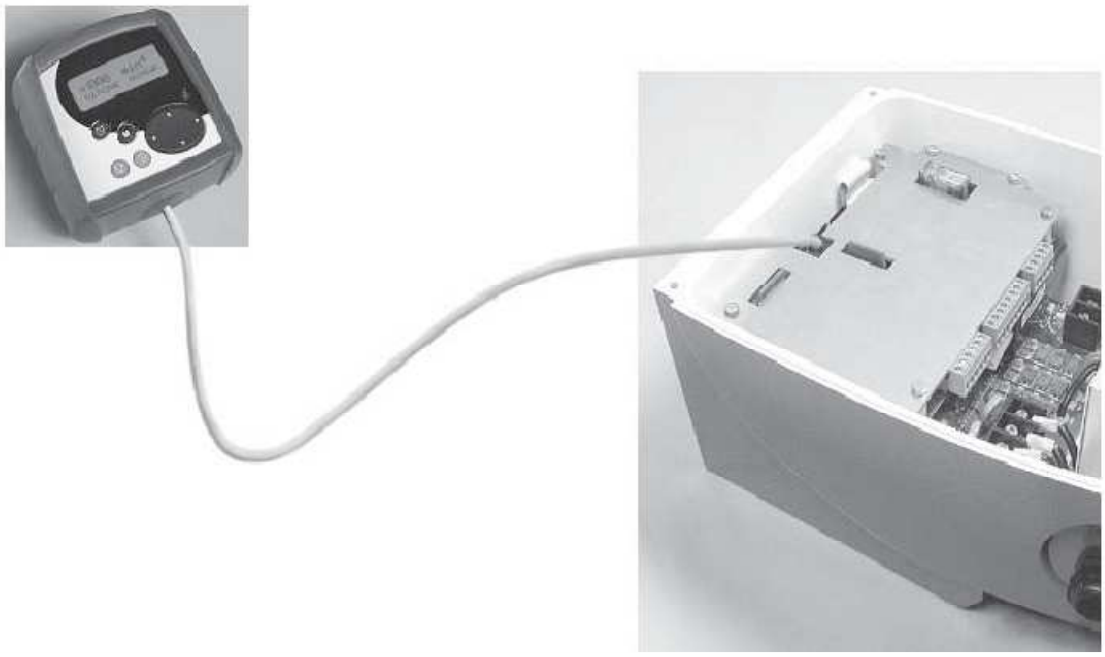

## 2.2 - Presentation of the LCD KEYPAD

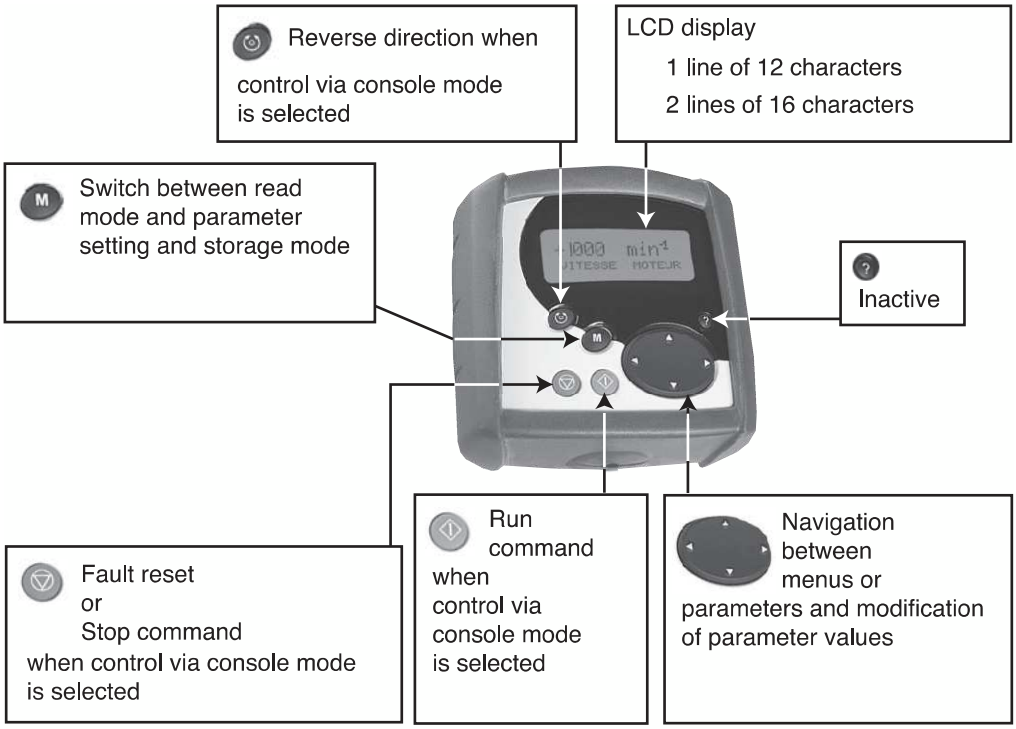

## 2.3 - Read mode

### 2.3.1 - Selection of language

As soon as it is powered up, the LCD KEYPAD console offers a choice of languages

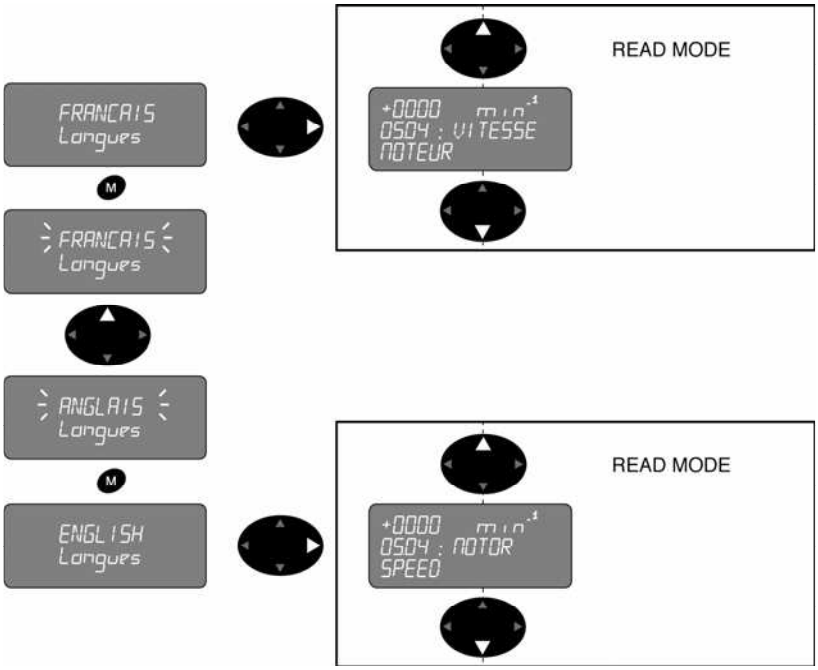


### 2.3.2 - Read mode

This mode is used to scroll through the parameters required for supervision and diagnostics:
– motor status, drive status, counters, faults, etc.

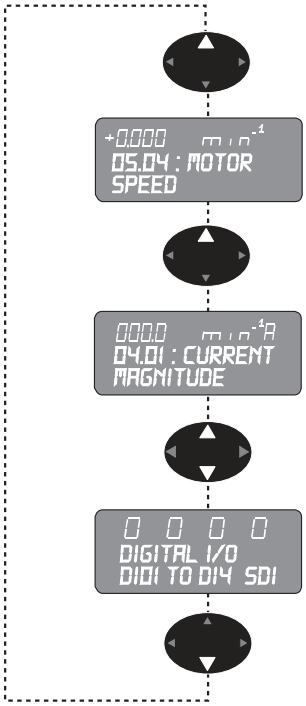


**List of parameters that can be displayed**

| | | |
|---|---|---|
| 05.01 | Motor frequency | |
| 04.01 | Total motor current | |
| 05.04 | Motor speed | |
| 04.02 | Active motor current | |
| 05.02 | Output voltage | |
| 05.05 | DC bus voltage | |
| 07.01 | Input ADI1 | |
| 07.02 | Input ADI2 | |
| 07.03 | Input or output ADIO3 | |
| | Digital I/O states DI01 to DI4 + SDI1 | |
| 08.01 | Digital input 1 | |
| 08.02 | Digital input 2 | |
| 08.03 | Digital input 3 | |
| 08.04 | Digital input 4 | |
| 08.09 | Secure disable input | |
| | Relay + Brake output states | |
| 08.07 | Output relay | (2) |
| 12.40 | Brake control | (2) |
| 01.49 | Selected reference | |
| 01.50 | Preset reference selected indicator | |
| 01.01 | Pre-limiting reference | |
| 02.01 | Post-ramp reference | |
| 06.22 | Timer | (3) |
| 06.23 | Timer | (3) |
| 06.24 | Energy meter | (4) |
| 06.25 | Energy meter | (4) |
| 10.21 | Fault - 2 | |
| 10.22 | Fault - 3 | |
| 10.23 | Fault - 4 | |
| 10.24 | Fault - 5 | |
| 10.25 | Fault - 6 | |
| 10.26 | Fault - 7 | |
| 10.27 | Fault - 8 | |
| 10.28 | Fault - 9 | |
| 10.29 | Fault - 10 | |
| 11.29 | VAR software version | |
| 22.10 | LCD console version | |
| 11.32 | Drive rated current | |
| 11.48 | Selection of preset configuration | |

(1) Digital inputs 1, 2, 3, and 4 and the secure disable input are displayed on a single line according to their logic state (0 or 1) in the order (DI01, DI2, DI3, DI4, SDI1).
(2) Same as (1) for the output relay and brake control, in the order (relay, brake).
(3) Display of the timer on a single line (Year/Days, Hr/Min).
(4) Display of the energy meter on a single line (MWh, kWh).

## 2.4 - Parameter-setting mode via "SIMPLIFIED" menu

The "SIMPLIFIED" menu is a user menu for simple parameter setting.

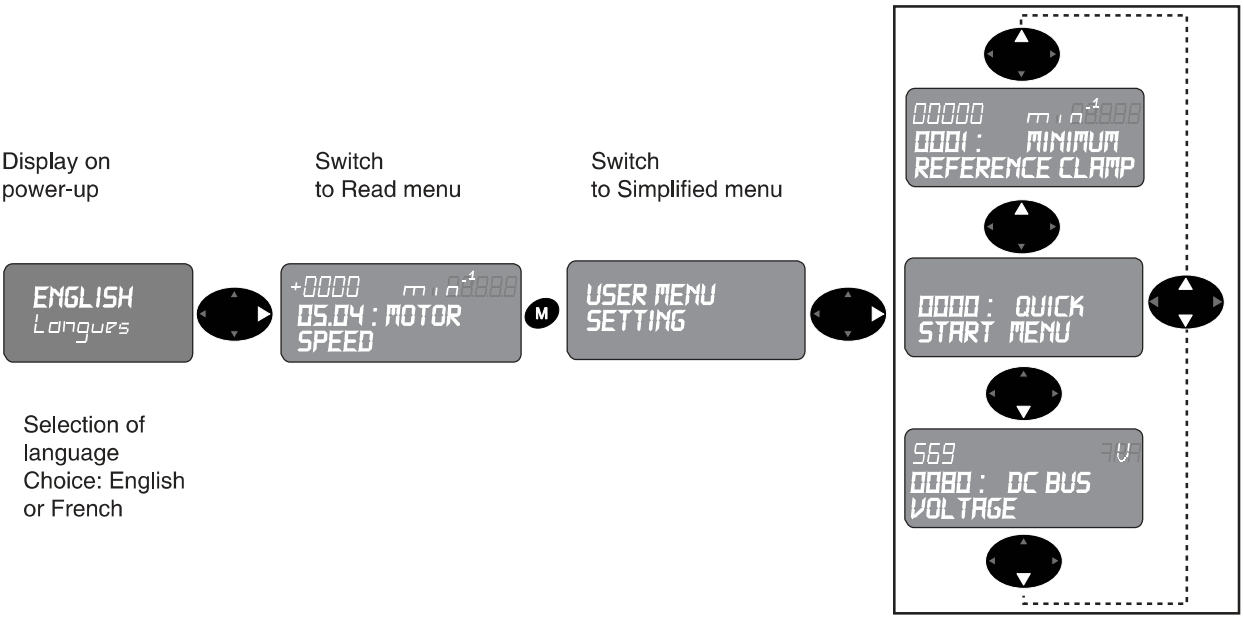


### 2.4.1 - Modifying a parameter

**CAUTION:**
**Parameter setting must be carried out with the drive locked. Then unlock the drive before giving the run command.**

**Numerical parameter:**

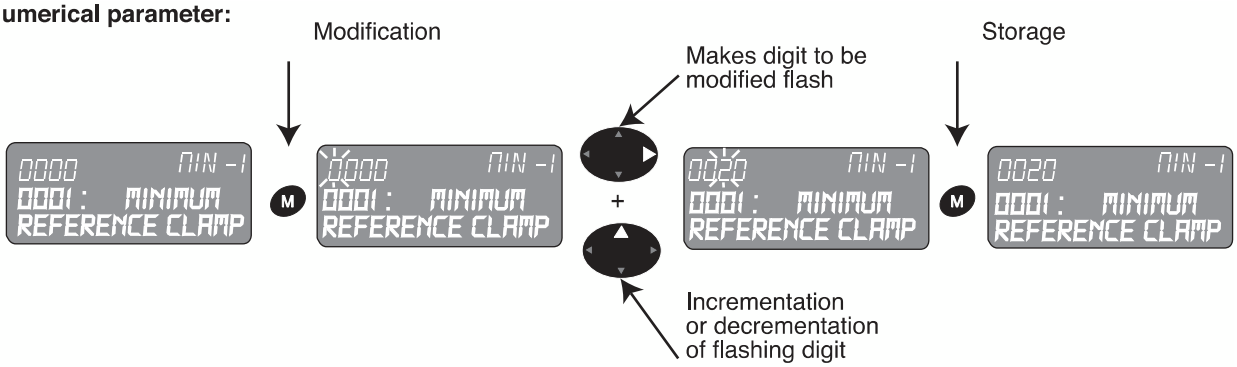


**Parameter with mnemonics:**

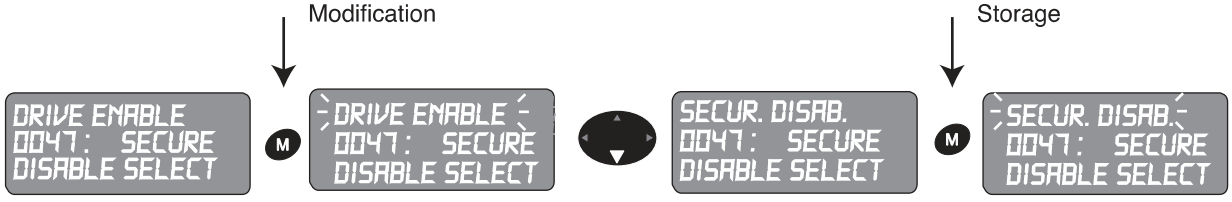


### 2.4.2 - Change from parameter-setting mode to read mode

## 2.5 - VARMECA 30 parameters accessible in SIMPLIFIED MENU

### 2.5.1 - Selection of basic parameters

**CAUTION:**
**Parameter setting must be carried out with the drive locked. Then unlock the drive before giving the run command.**

| Parameter | Name | Type | Factory setting | Adjustment range |
|---|---|---|---|---|
| **01** | MINIMUM LIMIT | R-W | 600 $min^{-1}$ (2-pole)<br>300 $min^{-1}$ (4-pole)<br>200 $min^{-1}$ (6-pole) | 0 to **02** $min^{-1}$<br>In uni-directional mode, this parameter defines the minimum speed.<br>**CAUTION:**<br>**• In the case where the setting is lower than the factory setting, make sure the operating time at the minimum speed is compatible with the heating of the motor.**<br>**• This parameter is inactive during jog operation.**<br>**• If the value of 02 is lower than that of 01, the value of** 01 **is automatically changed to the new value of 02.**<br>(Address menu in manual reference 3997: 01.07) |
| **02** | MAXIMUM LIMIT | R-W | 3000 or 4800 $min^{-1}$ (2-pole)<br>1500 or 2400 $min^{-1}$ (4-pole)<br>1000 or 1600 $min^{-1}$ (6-pole) | 0 to 32000 $min^{-1}$<br>**• Before setting a high maximum limit, check that the motor and the machine can withstand it.**<br>This parameter defines the maximum speed in both directions of rotation.<br>(Address menu in manual reference 3997: 01.06) |
| **03** | ACCELERATION RAMP 1 | R-W | 3.0 s/k $min^{-1}$ | 0.1 to 600 s/k $min^{-1}$<br>Adjustment of the time to accelerate from 0 to 1000 $min^{-1}$.<br>(Address menu in manual reference 3997: 02.11) |
| **04** | DECELERATION RAMP 1 | R-W | 5.0 s/k $min^{-1}$ | 0.1 to 600 s/k $min^{-1}$<br>Adjustment of the time to decelerate from 1000 $min^{-1}$ to 0.<br>(Address menu in manual reference 3997: 02.21) |
| **05** | SELECTION OF PRESET CONFIGURATION | R-W | STANDARD | STANDARD<br>STANDARD + JOG<br>STANDARD + PID<br>3VP + 1ANALOG.<br>3VP 1AN. ESFR<br>8VP<br>LOCAL/REM.<br>2VP PROP. B<br>PUMP REGUL.<br>TORQUE CTRL<br>FSTR/SLOWER<br>FASTER/SLOWER<br>MOTORISED POT.<br>PADVMA30 CONTROL<br>Any |
| **06** | MOTOR RATED CURRENT | R-W | – | VARMECA 0 to I max (A)<br>This is the value of the motor rated current indicated on the nameplate.<br>Above this value the motor is overloaded.<br>(Address menu in manual reference 3997: 05.07) |

# VARMECA 30
## Variable speed motors and geared motors
COMMISSIONING USING THE LCD KEYPAD MICRO CONSOLE



| Parameter | Name | Type | Factory setting | Adjustment range |
|---|---|---|---|---|
| **07** | MOTOR RATED SPEED | R-W | – | 0 to 9 999 $min^{-1}$<br><br>This is the on-load speed of the motor indicated on the nameplate.<br>**CAUTION:**<br>**In the case of applications with high inertia and centrifugal (eg: ventilation) overvoltage can occur on the DC bus.**<br>**In this case, set 07** to the synchronous speed (1000 $min^{-1}$ for 6 -pole, 1500 $min^{-1}$ for 4-pole, 3000 $min^{-1}$ for 2-pole,...).<br>(Address menu in manual reference 3997: 05.08) |
| **08** | MOTOR RATED VOLTAGE | R-W | – | 0 to 480 V<br><br>This is the rated voltage indicated on the motor nameplate.<br>(Address menu in manual reference 3997: 05.09) |
| **09** | MOTOR POWER FACTOR | R-W | – | 0 to 1.00<br><br>The power factor is measured automatically during an autocalibration phase in level 2 (see **63** in section 2.5.3) and set in this parameter.<br>If it is not possible to carry out the level 2 autocalibration procedure, enter the cos $\varphi$ value indicated on the motor nameplate.<br>(Address menu in manual reference 3997: 05.10) |
| **10** | MENU 0 ACCESS LEVEL | R-W | Level 2 | Level 1<br>Level 2<br>Read only<br><br>**Level 1:** Level 1 access. Only parameters **01** to **10** can be accessed.<br>**Level 2:** Level 2 access. Parameters **01** to **80** can be accessed.<br>**Read only:** Used to store or reactivate a security code with the PADVMA30 option.<br>(Address menu in manual reference 3997: 11.44) |

## 2.5.2 - Selection of preset configuration

Parameters **11** to **24** are dependent on the choice made in **05**, and thus on the selected preset configuration. Their assignments are listed in the following sections, with the wiring diagrams for the configurations.

### 2.5.2.1 - STANDARD CONFIGURATION (05 = STANDARD)

**VARMECA 31/32**

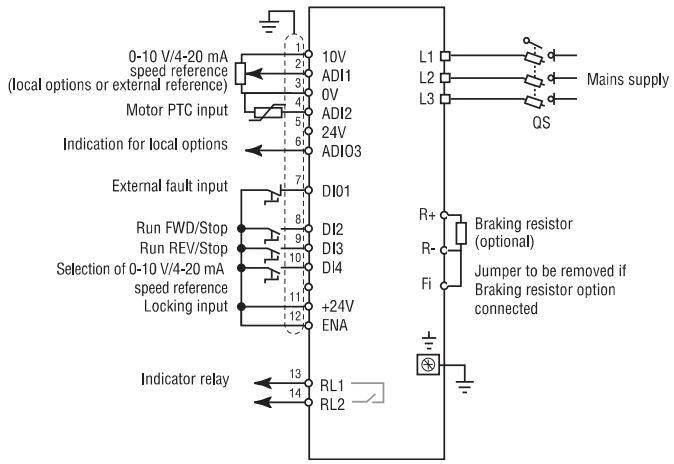


**VARMECA 33/34**

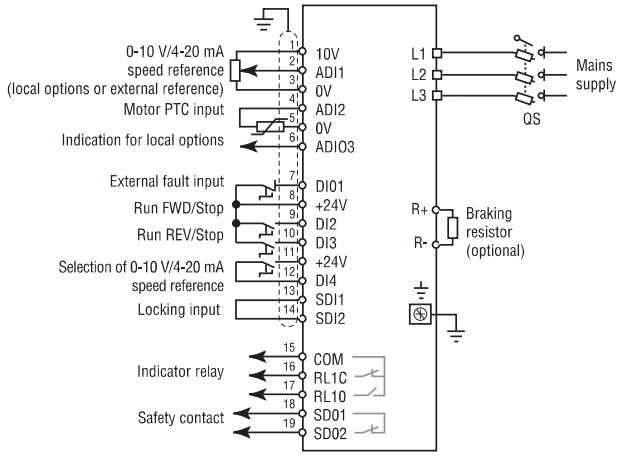


***Note***: For single-phase versions, the power supply is connected to terminals L and N.

- See manual 3776 for the connection and commissioning rules and the I/O characteristics
- The parameters must be set with the VARMECA 30 locked, i.e. jumper between terminals SDI1 and SDI2 or ENA and +24V open.
- The VARMECA 30 operates in positive logic.

ADI2 terminal: • Configured as "PTC" input. If not used, connect to 0 V terminal with a jumper.

DI01 terminal: • Configured as "External fault" input. For the drive to operate, this terminal must be connected to the + 24 V.

DI4 terminal: • Configured as 0-10 V/4-20 mA selection. When it is connected to the + 24 V, terminal ADI1 is intended for a 4-20pmA signal. Without a jumper (factory setting), the speed reference will be 0-10 V.

**Parameters specific to the configuration accessible with the LCD KEYPAD option (VMA 31/32 only) :**

| Parameter | Name | Type | Factory setting | Adjustment range |
|---|---|---|---|---|
| **11** | ADI1 MODE | R-W | 0-10 V | 0-20 mA; 20-0 mA; 4-20 mA detect; 20-4 mA detect; 4-20 mA no detect; 20-4 mA no detect; 0-10 V; Digital input<br><br>detect: with detection of 4 mA signal loss.<br>no detect: without detection of 4 mA signal loss. |
| **12** | ADI2 MODE | R-W | PTC SENSORS | 0-20 mA; 20-0 mA; 4-20 mA detect; 20-4 mA detect; 4-20 mA no detect; 20-4 mA no detect; 0-10 V; Digital input; PTC sensors<br><br>detect: with detection of 4 mA signal loss.<br>no detect: without detection of 4 mA signal loss.<br>(Address menu in manual reference 3997: 7.11) |

# VARMECA 30
## Variable speed motors and geared motors
COMMISSIONING USING THE LCD KEYPAD MICRO CONSOLE



### 2.5.2.2 - STANDARD CONFIGURATION (05 = STANDARD) WITH ESFR OPTION

**VARMECA 31/32**

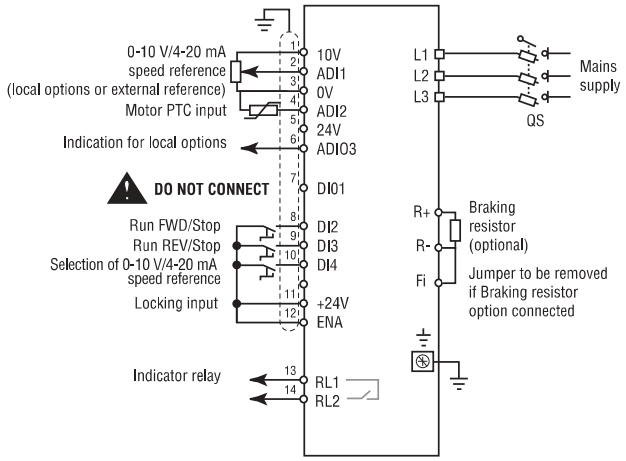


**VARMECA 33/34**

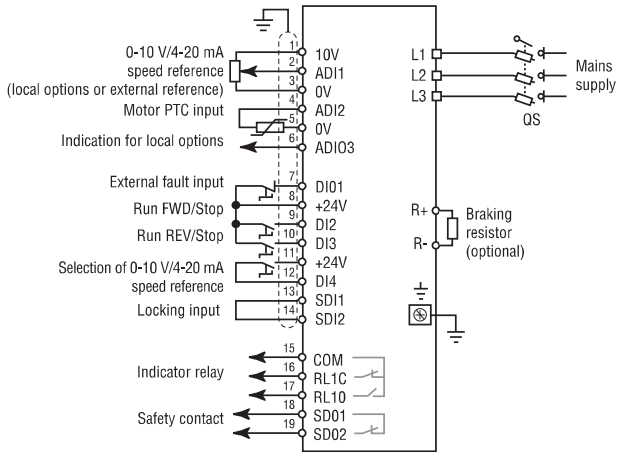


***Note***: For single-phase versions, the power supply is connected to terminals L and N.

- See manual 3776 for the connection and commissioning rules and the I/O characteristics
- The parameters must be set with the VARMECA 30 locked, i.e. jumper between terminals SDI1 and SDI2 or ENA and +24V open.
- The VARMECA 30 operates in positive logic.

ADI2 terminal:• Configured as "PTC" input. If not used, connect to 0 V terminal with a jumper.

DI01 terminal:• Configured as "External fault" input. For the drive to operate, this terminal must be connected to the + 24 V.

⚠ **• In VMA 31/32 this terminal must not be used.**

DI4 terminal: • Configured as 0-10 V/4-20 mA selection. When it is connected to the + 24 V, terminal ADI1 is intended for a 4-20þmA signal. Without a jumper (factory setting), the speed reference will be 0-10 V.

To enable the ESFR option, set parameter **36** to: **36** = ON CONTACT.
- In VMA 31/32 the display of parameter 05 will change to blank.

**Parameters related to brake control:**

| Parameter | Name | Type | Factory setting | Adjustment range |
|---|---|---|---|---|
| **36** | BRAKE CONTROL | R-W | ON CONTACT | |
| **37** | BRAKE RELEASE CURRENT | R-W | 10.0% | 0 to 200.0% |
| **38** | BRAKE APPLY CURRENT | R-W | 10.0% | 0 to 200.0% |
| **39** | BRAKE RELEASE HZ | R-W | 1.0 Hz | 0 to 20.0 Hz |
| **40** | BRAKE APPLY HZ | R-W | 2.0 Hz | 0 to 20.0 Hz |
| **41** | MAGNETISATION TIME DELAY | R-W | 0.1 s | 0 to 25.0 s |
| **42** | RAMP UNLOCK TIME DELAY | R-W | 0.1 s | 0 to 25.0 s |

Sequential brake control:

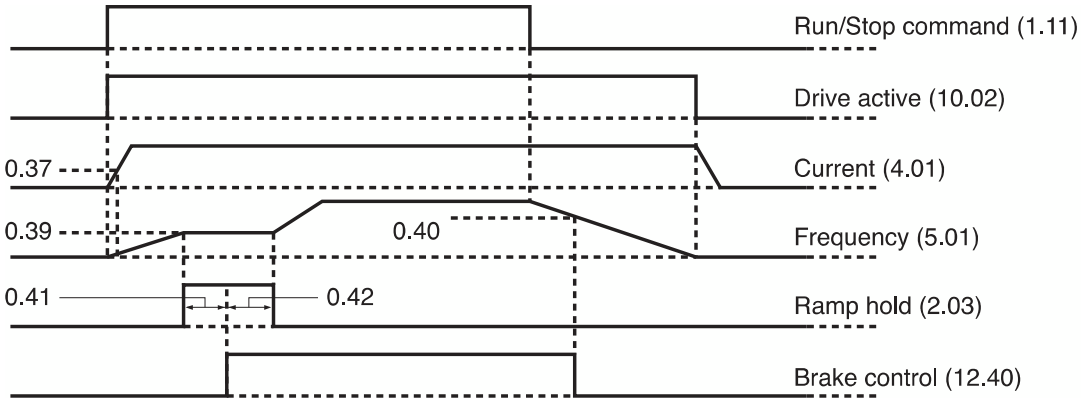

### 2.5.2.3 - JOG CONFIGURATION (**05** = STANDARD + JOG)

**VARMECA 31/32**

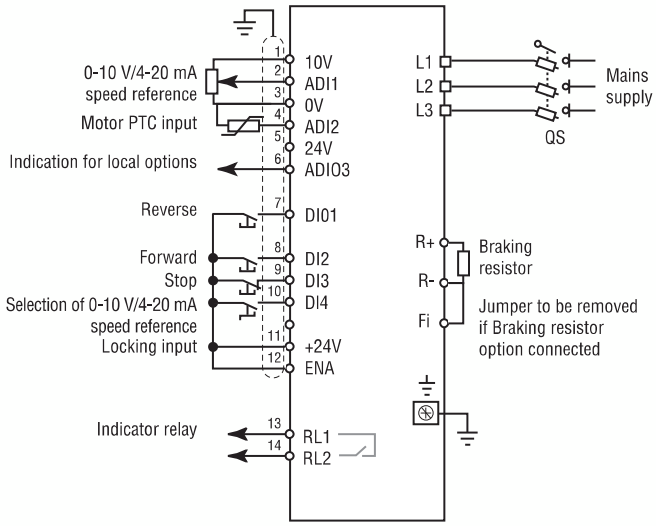


**VARMECA 33/34**

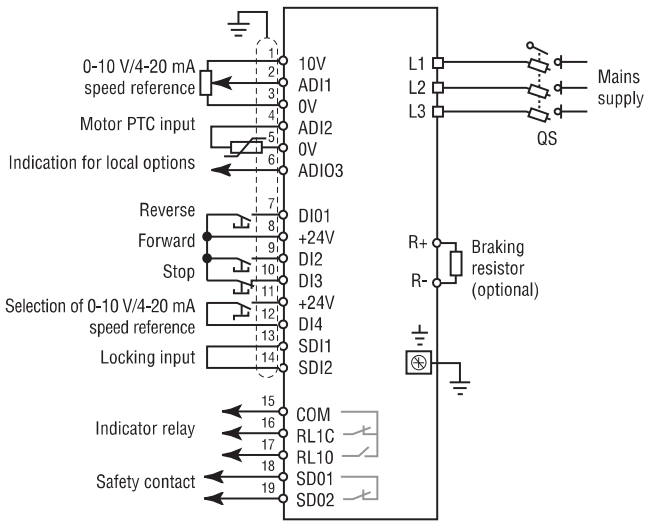


***Note***: For single-phase versions, the power supply is connected to terminals L and N.

- See manual 3776 for the connection and commissioning rules and the I/O characteristics
- The parameters must be set with the VARMECA 30 locked, i.e. jumper between terminals SDI1 and SDI2 or ENA and +24V open.
- The VARMECA 30 operates in positive logic.

ADI2 terminal: • Configured as "PTC" input. If not used, connect to the 0 V terminal with a jumper.

DI4 terminal: • Configured as 0-10 V/4-20 mA selection. When it is connected to the + 24 V, terminal ADI1 is intended for a 4-20þmA signal. Without a jumper (factory setting), the speed reference will be 0-10 V.

With this configuration none of the parameters between **11** and **24** are opened.

### 2.5.2.4 - PID CONFIGURATION (**05** = STANDARD + PID)

**VARMECA 31/32**

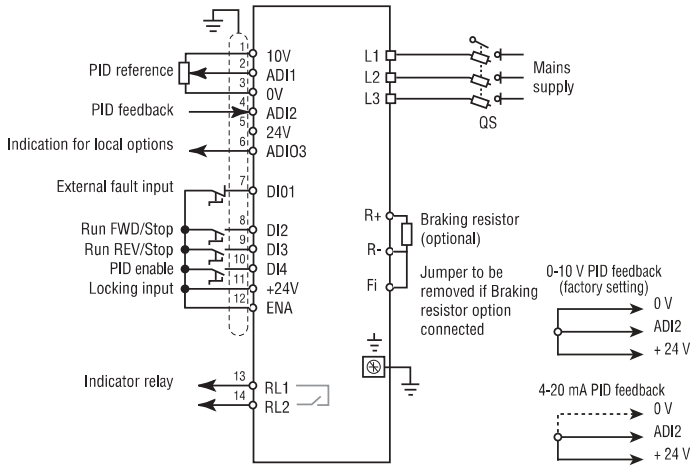


**VARMECA 33/34**

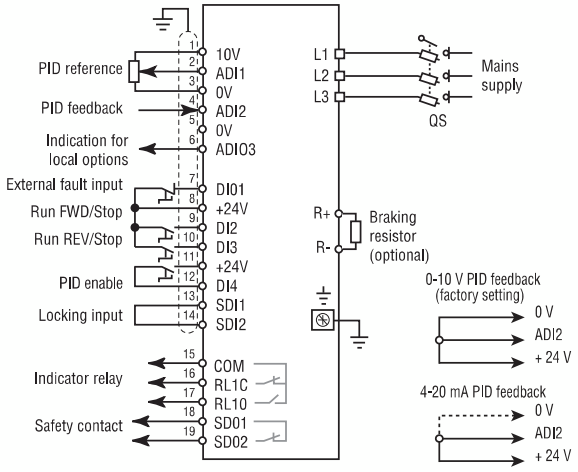


***Note***: For single-phase versions, the power supply is connected to terminals L and N.

- See manual 3776 for the connection and commissioning rules and the I/O characteristics.
- The parameters must be set with the VARMECA 30 locked, i.e. jumper between terminals SDI1 and SDI2 or ENA and +24V open.
- The VARMECA 30 operates in positive logic.

DI01 terminal:•Configured as "External fault" input. For the drive to operate, this terminal must be connected to the + 24 V.

DI4 terminal:•Configured as "PID enable" input. When connected to the + 24 V, PID regulation is active, otherwise (contact open) the VARMECA 30 is controlled using the speed reference via terminal ADI1.

**Parameters specific to the configuration accessible with the LCD KEYPAD option:**

| Parameter | Name | Type | Factory setting | | Adjustment range |
|---|---|---|---|---|---|
| **11** | ADI1 MODE | R-W | 0-10 V | | 0-20 mA; 20-0 mA; 4-20 mA detect; 20-4 mA detect; 4-20 mA no detect; 20-4 mA no detect; 0-10 V; Digital input<br>detect: with detection of 4 mA signal loss<br>no detect: without detection of 4 mA signal loss<br>(Address menu in manual reference 3997: 7.06) |
| **12** | ADI2 MODE | R-W | 0-10 V | | 0-20 mA; 20-0 mA; 4-20 mA detect; 20-4 mA detect; 4-20 mA no detect; 20-4 mA no detect; 0-10 V; Digital input; PTC sensors<br>detect: with detection of 4 mA signal loss<br>no detect: without detection of 4 mA signal loss<br>(Address menu in manual reference 3997: 7.11) |
| **13** | PROPORTIONAL GAIN PID | R-W | VMA31/32<br>200.0 | VMA34/35<br>150.0 | 0 to 320<br>(Address menu in manual reference 3997: 14.10) |
| **14** | PID INTEGRAL GAIN | R-W | VMA31/32<br>20.0 | VMA34/35<br>20.0 | 0 to 320<br>(Address menu in manual reference 3997: 14.11) |
| **15** | PID DERIVATIVE GAIN | R-W | 0.00 | | 0 to 2.50<br>(Address menu in manual reference 3997: 14.12) |
| **16** | PID OUTPUT UPPER LIMIT | R-W | 100.0% | | 0 to 100%<br>(Address menu in manual reference 3997: 14.13) |
| **17** | PID OUTPUT LOWER LIMIT | R-W | – 100.0% | | ± 100.0%<br>(Address menu in manual reference 3997: 14.14) |
| **18** | PID OUTPUT SCALE | R-W | 1.00 | | 0 to 2.50<br>(Address menu in manual reference 3997: 14.15) |
| **19** | ADI2 INPUT SCALE | R-W | 1.00 | | 0 to 2.50<br>(Address menu in manual reference 3997: 7.12) |
| **20** | Not used | | | | |
| **21** | PRESET REFERENCE 7 | RO | +00000 $min^{-1}$ | | ± Limit (**02**) $min^{-1}$<br>PID reference expressed as speed<br>(Address menu in manual reference 3997: 14.20) |
| **22** | PRESET REFERENCE 8 | RO | +00000 $min^{-1}$ | | ± Limit (**02**) $min^{-1}$<br>PID feedback expressed as speed<br>(Address menu in manual reference 3997: 14.21) |
| **23** | PID ERROR | RO | + 000.0% | | ± 100.0%<br>(Address menu in manual reference 3997: 14.19) |
| **24** | PID OUTPUT VALUE | RO | + 000.0 % | | ± 100.0%<br>(Address menu in manual reference 3997: 14.01) |

### 2.5.2.5 - CONFIGURATION WITH 1 ANALOGUE REFERENCE + 3 PRESET REFERENCES (**05** = 3VP + 1ANALOG.)

**VARMECA 31/32**

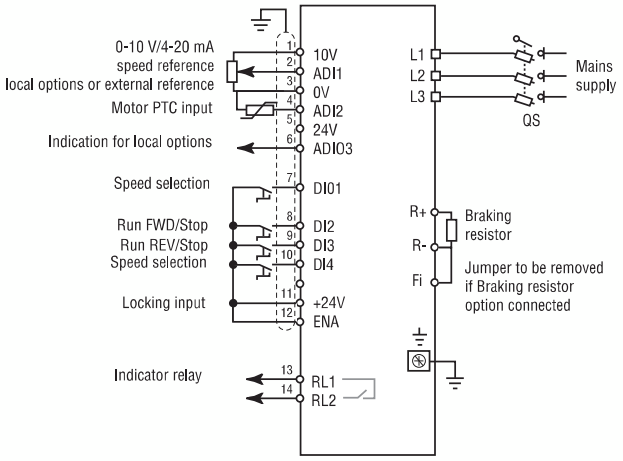


**VARMECA 33/34**

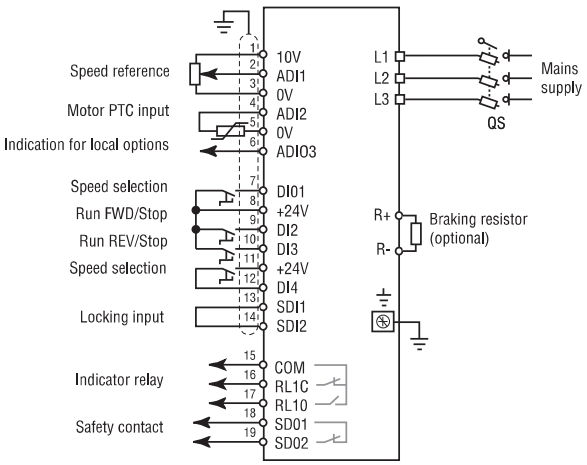


***Note***: For single-phase versions, the power supply is connected to terminals L and N.

**Reference selection table**

| DI4 | DI01 | Selection |
|---|---|---|
| 0 | 0 | 0-10 V analogue reference (ADI1) |
| 1 | 0 | Preset reference 2 |
| 0 | 1 | Preset reference 3 |
| 1 | 1 | Preset reference 4 |

***Note***:
- See manual 3776 for the connection and commissioning rules and the I/O characteristics.
- The parameters must be set with the VARMECA 30 locked, i.e. jumper between terminals SDI1 and SDI2 or ENA and +24V open.
- The VARMECA 30 operates in positive logic.

ADI2 terminal: • Configured as "PTC" input. If not used, connect to the 0 V terminal with a jumper.

**Parameters specific to the configuration accessible with the LCD KEYPAD option:**

| Parameter | Name | Type | Factory setting | Adjustment range |
|---|---|---|---|---|
| **11** | ADI1 MODE | R-W | 0-10 V | 0-20 mA; 20-0 mA; 4-20 mA detect; 20-4 mA detect; 4-20 mA no detect; 20-4 mA no detect; 0-10 V; Logic input<br><br>detect: with detection of 4 mA signal loss<br>no detect: without detection of 4 mA signal loss<br>(Address menu in manual reference 3997: 7.06) |
| **12** | PRESET REFERENCE 2 | R-W | +00000 $min^{-1}$ | Limit (**02**) $min^{-1}$<br>(Address menu in manual reference 3997: 1.22) |
| **13** | PRESET REFERENCE 3 | R-W | +00000 $min^{-1}$ | Limit (**02**) $min^{-1}$<br>(Address menu in manual reference 3997: 1.23) |
| **14** | PRESET REFERENCE 4 | R-W | +00000 $min^{-1}$ | Limit (**02**) $min^{-1}$<br>(Address menu in manual reference 3997: 1.24) |
| **15** to **24** | Not used | | | |

### 2.5.2.6 - CONFIGURATION WITH 1 ANALOGUE REFERENCE + 3 VMA31/32 PRESET REFERENCES WITH ESFR OPTION (05 = 3VP 1ANA.ESFR)

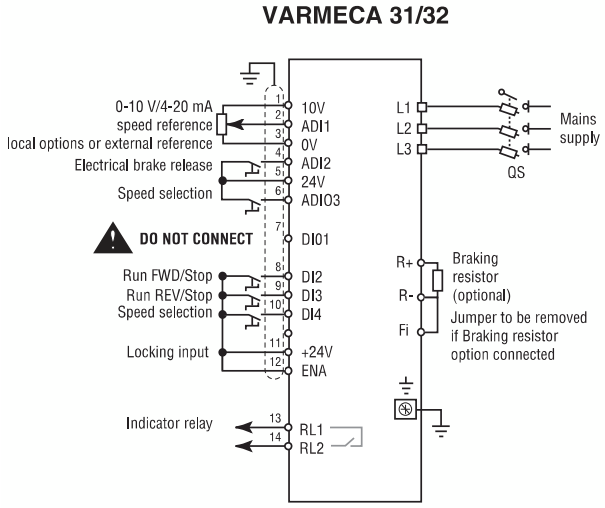


**Reference selection table**

| DI4 | ADI03 | Selection |
|---|---|---|
| 0 | 0 | 0-10 V analogue reference (ADI1) |
| 1 | 0 | Preset reference 2 |
| 0 | 1 | Preset reference 3 |
| 1 | 1 | Preset reference 4 |

***Note***: For single-phase versions, the power supply is connected to terminals L and N.

- See manual 3776 for the connection and commissioning rules and the I/O characteristics.
- The parameters must be set with the VARMECA 30 locked, i.e. jumper between terminals SDI1 and SDI2 or ENA and +24V open.
- The VARMECA 30 operates in positive logic.

DI01 terminal: **• this terminal must not be used.**

**Parameters specific to the configuration accessible with the LCD KEYPAD option:**

| Parameter | Name | Type | Factory setting | Adjustment range |
|---|---|---|---|---|
| **11** | ADI1 MODE | R-W | 0-10 V | 0-20 mA; 20-0 mA; 4-20 mA detect; 20-4 mA detect; 4-20 mA no detect; 20-4 mA no detect; 0-10 V; Digital input<br><br>detect: with detection of 4 mA signal loss.<br>no detect: without detection of 4 mA signal loss.<br>(Address menu in manual reference 3997: 7.06) |
| **12** | PRESET REFERENCE 2 | R-W | +00000 $min^{-1}$ | Limit (**02**) $min^{-1}$<br>(Address menu in manual reference 3997: 1.22) |
| **13** | PRESET REFERENCE 3 | R-W | +00000 $min^{-1}$ | Limit (**02**) $min^{-1}$<br>(Address menu in manual reference 3997: 1.23) |
| **14** | PRESET REFERENCE 4 | R-W | +00000 $min^{-1}$ | Limit (**02**) $min^{-1}$<br>(Address menu in manual reference 3997: 1.24) |
| **15** to **24** | Not used | | | |

Parameters related to brake control:

| Parameter | Name | Type | Factory setting | Adjustment range |
|---|---|---|---|---|
| **36** | BRAKE CONTROL | R-W | ON CONTACT | |
| **37** | BRAKE RELEASE CURRENT | R-W | 10.0% | 0 to 200.0% |
| **38** | BRAKE APPLY CURRENT | R-W | 10.0% | 0 to 200.0% |
| **39** | BRAKE RELEASE HZ | R-W | 1.0 Hz | 0 to 20.0 Hz |
| **40** | BRAKE APPLY HZ | R-W | 2.0 Hz | 0 to 20.0 Hz |
| **41** | MAGNETISATION TIME DELAY | R-W | 0.1 s | 0 to 25.0 s |
| **42** | RAMP UNLOCK TIME DELAY | R-W | 0.1 s | 0 to 25.0 s |

For a description of sequential brake control, see appendix.

### 2.5.2.7 - CONFIGURATION WITH 8 PRESET REFERENCES (**05** = 8VP)

**VARMECA 31/32**

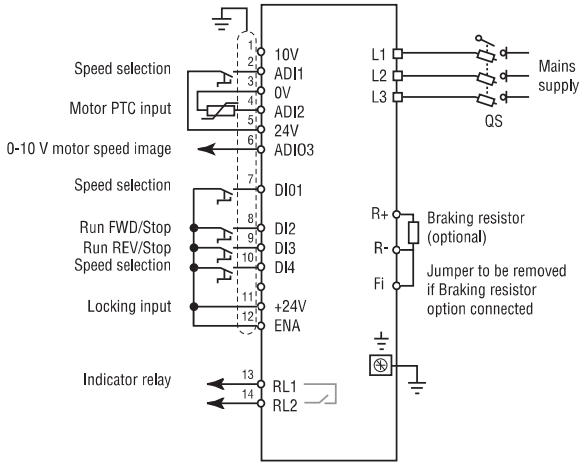


**VARMECA 33/34**

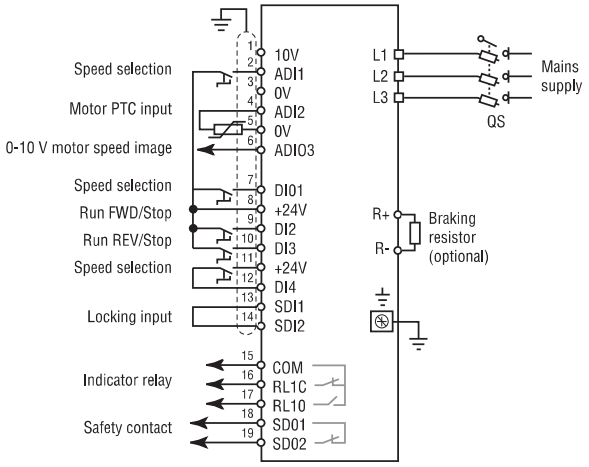


***Note***: For single-phase versions, the power supply is connected to terminals L and N.

**Reference selection table**

| DI4 | ADI1 | DI01 | Selection |
|---|---|---|---|
| 0 | 0 | 0 | Preset reference 1 |
| 1 | 0 | 0 | Preset reference 2 |
| 0 | 1 | 0 | Preset reference 3 |
| 1 | 1 | 0 | Preset reference 4 |
| 0 | 0 | 1 | Preset reference 5 |
| 1 | 0 | 1 | Preset reference 6 |
| 0 | 1 | 1 | Preset reference 7 |
| 1 | 1 | 1 | Preset reference 8 |

***Note***:
- See manual 3776 for the connection and commissioning rules and the I/O characteristics.
- The parameters must be set with the VARMECA 30 locked, i.e. jumper between terminals SDI1 and SDI2 or ENA and +24V open.
- The VARMECA 30 operates in positive logic.

ADI2 terminal: • Configured as "PTC" input. If not used, connect to 0 V terminal with a jumper.

**Parameters specific to the configuration accessible with the LCD KEYPAD option:**

| Parameter | Name | Type | Factory setting | Adjustment range |
|---|---|---|---|---|
| **11** | PRESET REFERENCE 1 | R-W | + 00000 $min^{-1}$ | Limit (**02**) $min^{-1}$ (Address menu in manual reference 3997: 1.21) |
| **12** | PRESET REFERENCE 2 | R-W | + 00000 $min^{-1}$ | Limit (**02**) $min^{-1}$ (Address menu in manual reference 3997: 1.22) |
| **13** | PRESET REFERENCE 3 | R-W | + 00000 $min^{-1}$ | Limit (**02**) $min^{-1}$ (Address menu in manual reference 3997: 1.23) |
| **14** | PRESET REFERENCE 4 | R-W | + 00000 $min^{-1}$ | Limit (**02**) $min^{-1}$ (Address menu in manual reference 3997: 1.24) |
| **15** | PRESET REFERENCE 5 | R-W | + 00000 $min^{-1}$ | Limit (**02**) $min^{-1}$ (Address menu in manual reference 3997: 1.25) |
| **16** | PRESET REFERENCE 6 | R-W | + 00000 $min^{-1}$ | Limit (**02**) $min^{-1}$ (Address menu in manual reference 3997: 1.26) |
| **17** | PRESET REFERENCE 7 | R-W | + 00000 $min^{-1}$ | Limit (**02**) $min^{-1}$ (Address menu in manual reference 3997: 1.27) |
| **18** | PRESET REFERENCE 8 | R-W | + 00000 $min^{-1}$ | Limit (**02**) $min^{-1}$ (Address menu in manual reference 3997: 1.28) |
| **19** to **24** | Not used | | | |

# VARMECA 30
## Variable speed motors and geared motors
COMMISSIONING USING THE LCD KEYPAD MICRO CONSOLE



### 2.5.2.8 - CONFIGURATION WITH REFERENCE CORRECTION VIA LOCAL BUTTON (**05** = LOCAL/REM.)

**VARMECA 31/32**

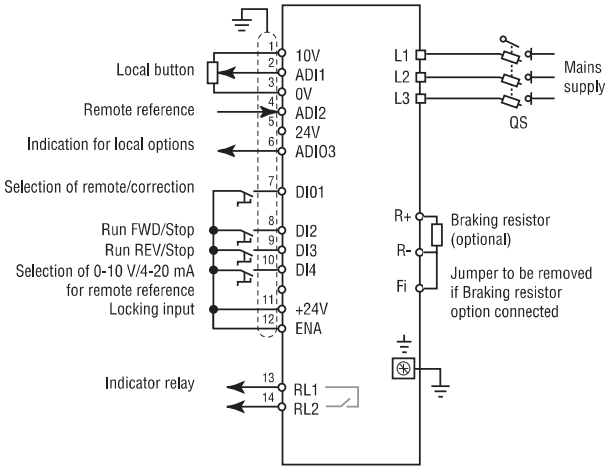


**VARMECA 33/34**

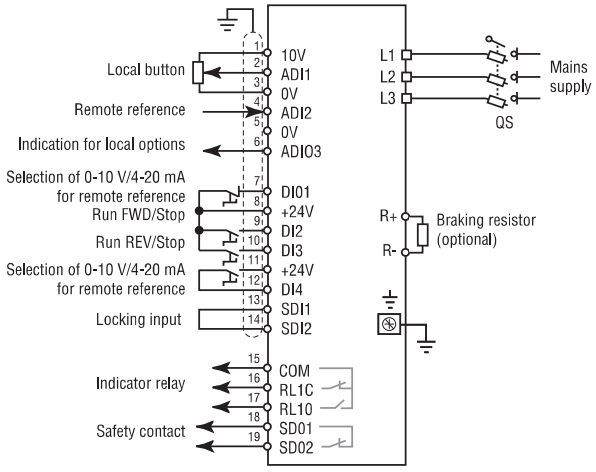


***Note***: For single-phase versions, the power supply is connected to terminals L and N.

- See manual 3776 for the connection and commissioning rules and the I/O characteristics.
- The parameters must be set with the VARMECA 30 locked, i.e. jumper between terminals SDI1 and SDI2 or ENA and +24V open.
- The VARMECA 30 operates in positive logic.

DI01 terminal:• Configured as “Select Local Reference or Remote reference correction via local reference” input. When connected to the + 24 V, the remote reference is not corrected.

DI4 terminal: • Configured as 0-10 V/4-20 mA selection. When it is connected to the + 24 V, terminal ADI2 is intended for a 4-20þmA signal. Without a jumper (factory setting), the remote reference will be 0-10 V.

**Parameters specific to the configuration accessible with the LCD KEYPAD option:**

| Parameter | Name | Type | Factory setting | Adjustment range |
|---|---|---|---|---|
| **11** | ADI1 MODE | R-W | 0-10 V | 0-20 mA; 20-0 mA; 4-20 mA detect; 20-4 mA detect; 4-20þmA no detect; 20-4 mA no detect; 0-10 V; Logic input<br><br>detect: with detection of 4 mA signal loss<br>no detect: without detection of 4 mA signal loss<br>(Address menu in manual reference 3997: 7.06) |
| **12** | PERCENTAGE TRIM | RO | 0 % | ± 100.0%<br>Read correction coefficient |
| **13** | READ ANALOGUE REFERENCE 1 | RO | 300 $min^{-1}$ | Limit (**02**) $min^{-1}$<br>Read reference |
| **14** | FREQUENCY/SPEED REFERENCE SELECTED | RO | 300 $min^{-1}$ | Limit (**02**) $min^{-1}$<br>Result of correction |
| **15** to **24** | Not used | | | |

### 2.5.2.9 - CONFIGURATION WITH PRESET SPEED CORRECTION VIA LOCAL REFERENCE (**05** = 2VP PROP. B)

**VARMECA 31/32**

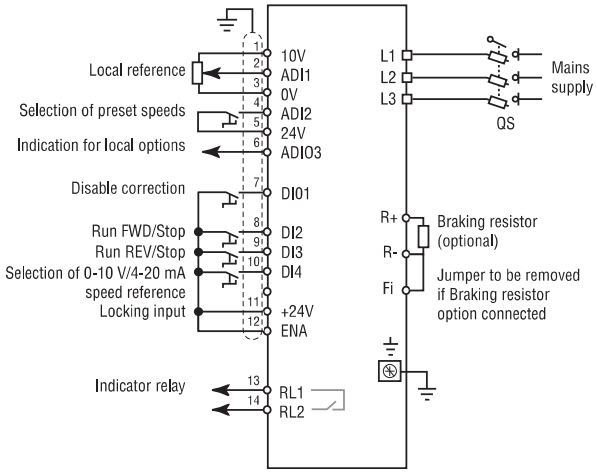


**VARMECA 33/34**

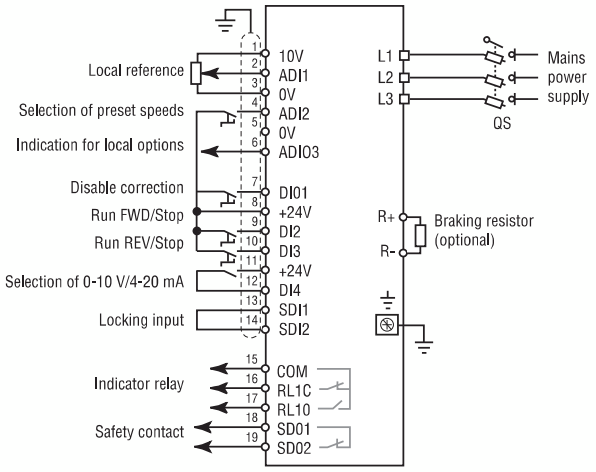


***Note***: For single-phase versions, the power supply is connected to terminals L and N.

**Reference selection table**

| ADI2 | Selection |
|---|---|
| 0 | Preset reference 1 |
| 1 | Preset reference 2 |

***Note***: • See manual 3776 for the connection and commissioning rules and the I/O characteristics
• The parameters must be set with the VARMECA 30 locked, i.e. jumper between terminals SDI1 and SDI2 or ENA and +24V open.
• The VARMECA 30 operates in positive logic.

DI01 terminal: • Configured as "Select Preset Speeds or Correction of preset speeds via local reference".
When connected to the + 24 V the correction via the local reference affects the selected preset speed.

DI4 terminal: • Configured as 0-10 V/4-20 mA selection. When it is connected to the + 24 V, terminal ADI1 is intended for a 4-20þmA signal. Without a jumper (factory setting), the speed reference will be 0-10 V.

**Parameters specific to the configuration accessible with the LCD KEYPAD option:**

| Parameter | Name | Type | Factory setting | Adjustment range |
|---|---|---|---|---|
| **11** | BIT 0 SEL. R.P./DIG. INPUT | RO | Inactive | Inactive; Active<br>Selection of preset speeds<br>ADI2 / Selection: 0 – Preset reference 1; 1 – Preset reference 2 |
| **12** | PERCENTAGE TRIM | RO | 0% | ± 100.0%<br>Read correction coefficient |
| **13** | PRESET REFERENCE 1 | R-W | 0 $min^{-1}$ | Limit (**02**) $min^{-1}$<br>(Address menu in manual reference 3997: 1.21) |
| **14** | PRESET REFERENCE 2 | R-W | 0 $min^{-1}$ | Limit (**02**) $min^{-1}$<br>(Address menu in manual reference 3997: 1.22) |
| **15** | FREQUENCY/SPEED REFERENCE SELECTED | RO | 0 $min^{-1}$ | Limit (**02**) $min^{-1}$<br>Result of correction<br>(Address menu in manual reference 3997: 1.01) |
| **16** to **24** | Not used | | | |

# VARMECA 30
## Variable speed motors and geared motors
COMMISSIONING USING THE LCD KEYPAD MICRO CONSOLE



### 2.5.2.10 - REGULATION OF A PRESSURE WITH THE INTEGRATED PI LOOP - PI REFERENCE USING LOCAL OR EXTERNAL REFERENCE (05 = VENT PUMPS)

**VARMECA 31/32**

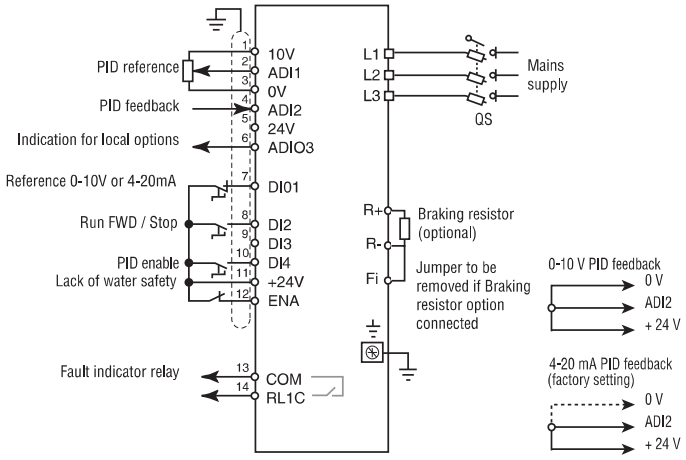


**VARMECA 33/34**

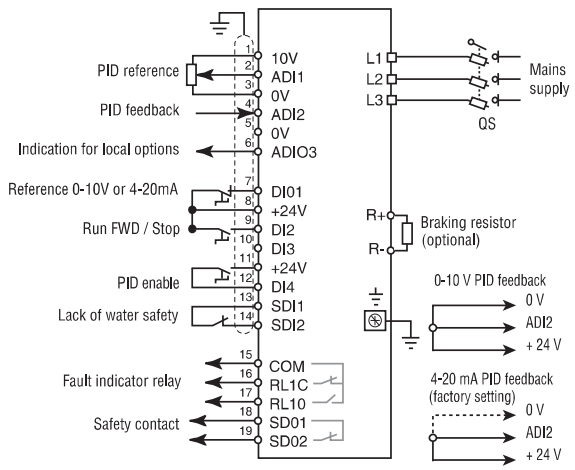


***Note***:

- See manual 3776 for the connection and commissioning rules and the I/O characteristics.
- The parameters must be set with the VARMECA 30 locked, i.e. jumper between terminals SDI1 and SDI2 or ENA and +24V open.
- The VARMECA 30 operates in positive logic.

DI01 terminal:• Configured as input, you can select the type of the reference pressure. The reference is in 0-10V if the input is connected to +24V.

DI4 terminal: • Configured as "PID enable" input. When connected to the + 24 V, PID regulation is active, otherwise (contact open) the VARMECA 30 is controlled using the speed reference via terminal ADI1.

**Parameters specific to the configuration accessible with the LCD KEYPAD option:**

| Parameter | Name | Type | Factory setting | | Adjustment range |
|---|---|---|---|---|---|
| **03** | ACCELERATION RAMP 1 | R-W | VMA 31/32<br>0.1 s / k $min^{-1}$<br>VMA 33/34<br>0.5 s / k $min^{-1}$ | | 0.1 to 600 s/k $min^{-1}$<br>Adjustment of the time to accelerate from 0 to 1000 $min^{-1}$<br>(Address menu in manual refference 3997 : 02.11) |
| **04** | DECELERATION RAMP 1 | R-W | 5 s / k $min^{-1}$ | | 0.1 to 600 s/k min-1<br>Adjustment of the time to decelerate from 1000 min-1 to 0<br>(Address menu in manual refference 997: 02.21) |
| **07** | MOTOR RATED SPEED | R-W | 3000 $min^{-1}$ | | Adjustment of motor 2 poles<br>(Address menu in manual refference 3997 : 05.08) |
| **11** | ADI1 MODE | R-W | 0-10 V | | 0-20 mA; 20-0 mA; 4-20 mA detect; 20-4 mA detect; 4-20 mA no detect; 20-4 mA no detect; 0-10 V; Digital input<br>detect: with detection of 4 mA signal loss<br>no detect: without detection of 4 mA signal loss<br>(Address menu in manual reference 3756: 7.06) |
| **12** | ADI2 MODE | R-W | 4-20 mA detect | | 0-20 mA; 20-0 mA; 4-20 mA detect; 20-4 mA detect; 4-20 mA no detect; 20-4 mA no detect; 0-10 V; Logic input; PTC sensors<br>detect: with detection of 4 mA signal loss<br>no detect: without detection of 4 mA signal loss<br>(Address menu in manual reference 3997: 7.11) |
| **13** | PID PROPORTIONAL GAIN | R-W | VMA31/32<br>100 | VMA33/34<br>150 | 0 to 320<br>(Address menu in manual reference 3997: 14.10) |
| **14** | PID INTEGRAL GAIN | R-W | VMA31/32<br>80 | VMA33/34<br>75 | 0 to 320<br>(Address menu in manual reference 3997: 14.11) |
| **15** | DIGITAL REFERENCE | R-W | 0 % | | 0 to 100.0 %<br>Value of digital reference<br>(Address menu in manual reference 3997 : 14.51) |

| Parameter | Name | Type | Factory setting | Adjustment range |
|---|---|---|---|---|
| **16** | THRESHOLD DETECTOR 1 | R-W | 10.0% | 0 to 100.0%<br>Adjustment of draining threshold<br>(Address menu in manual reference 3997: 12.04) |
| **17** | TIMER 1 VALUE | R-W | 10.0 s | 0 to 60.0 s<br>Adjustment of draining time delay<br>(Address menu in manual reference 3997: 16.05) |
| **18** | SENSOR COEFF. | R-W | 10 | 0 to 30<br>Sensor feedback scaling coefficient for reading the pressure directly<br>(Address menu in manual reference 3997: 14.53) |
| **19** | READ REFERENCE | R-O | - | +/- 32000<br>Reads the pressure reference and sensor feedback<br>(Address menu in manual reference 3997: 14.54-14.55) |
| **20** | REFERENCE FEEDBACK | R-O | - | |
| **21** | MOTOR SPEED | R-O | - $min^{-1}$ | Reads the motor speed<br>(Address menu in manual reference 3997: 05.04) |
| **46** | TIMER<br>(year, day) | R-O | | 0 to 9.364 |
| **47** | TIMER<br>(hr, min) | R-O | | 0 to 23.59 |
| **48** | LOCAL SCALE | R-W | 0.9 | 0 to 2.5<br>Adjustment of automatic restart threshold<br>(Address menu in manual reference 3997: 07.62) |
| **49** to **58** | FAULT - 1 to - 18 | R-O | | Log of the last 18 faults |

Description of operation: see appendix.

**DESCRIPTION OF CONFIGURATION 05 = VENT PUMPS**

Regulation reference:
- 0-10 V or 4 - 20 mA depends of DI01.

Sensor:
- 0 - 10V or 4 - 20 mA
- Power supply: 24 VDC (max. consumption 60 mA).

Automatic Run/Stop:
- On a run command, the power pump assembly will adjust the flow so as to maintain a constant pressure throughout the system. When the flow ceases, the pump stops automatically. The pump restarts as soon as the pressure falls below its working threshold.
  If draining occurs, the system stops in "User 1" fault mode.

**Pump settings:**

**1- Pump without pressure sensor (factory setting)**

The drive controls the flow according to the speed reference.

**2 - Pump with pressure sensor**

2.1 - The inverter adjusts speed to control the power

- Programming using the LCD KEYPAD console
- Programming using the local operator display PAD VMA 30
- Access to the user menu (menu 00).

Once the configuration has been set (addr. **0.05**) the drive opens the parameters linked to the application.

*Note: after modification of the parameters, the address 0.05 turns "FREE"*

2.2 - Possible displays
- Reference pressure (addr. **0.19**)
- Actual pressure (addr. **0.20**)
- Pump rotation speed (addr. **0.21**)

2.3 - Emergency mode
If the pressure regulation malfunctions, you can revert to speed regulation without using a parameter-setting tool, simply by opening terminal DI4. The pressure reference becomes a speed reference and can be used to adjust the pump flow.

**Commissioning:**

**1 - Wiring as shown in the diagram on page 21 depending on the type of Varmeca**
- DI4 open

**2 - Programming using the KEYPAD LCD micro console option (section 2.4)**

2.1 - Set the operating point
- Max. flow (addr. **0.02**) depends on the pump characteristics.

2.2 - Give a run command and check the direction of rotation, if necessary reverse two wires on the motor phases.

2.3 - Set the acceleration and deceleration time
- Accel. ramp (addr. **0.03** = 0.1s) VMA 31/32
- Accel. ramp (addr. **0.03** = 0.5s) VMA 33/34
- Decel. ramp (addr. **0.04** = 5 s)

**DO NOT MODIFY THE RAMPS**
This setting avoids altering the precision of regulation

2.4 - Select the "Vent. Pumps" configuration (addr. **0.05**)

2.5 - Choice of reference type (adress **0.11**)

2.6 - Choice of sensor type (addr. **0.12**)

**Help with diagnostics (section 2.3.2)**

In this read mode it is possible to display the state of the analogue and digital inputs, the motor data (speed, current, frequency, voltage), the timers and energy meters and also the list of the last ten faults.

*Note:*
*- to activate the reading mode, press 5's on the "M" button;*
*- Possibility of increasing time before stop (addr. 16.15) (factory adjustment : 25s)*

# VARMECA 30
## Variable speed motors and geared motors
COMMISSIONING USING THE LCD KEYPAD MICRO CONSOLE

### 2.5.2.11 - CONFIGURATION OF TORQUE CONTROL WITH SPEED LIMITING (**05** = TORQUE CNTRL.)

**VARMECA 31/32**

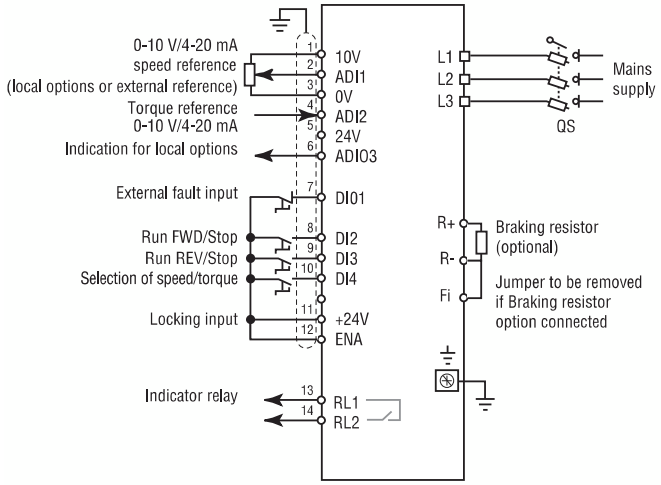


**VARMECA 33/34**

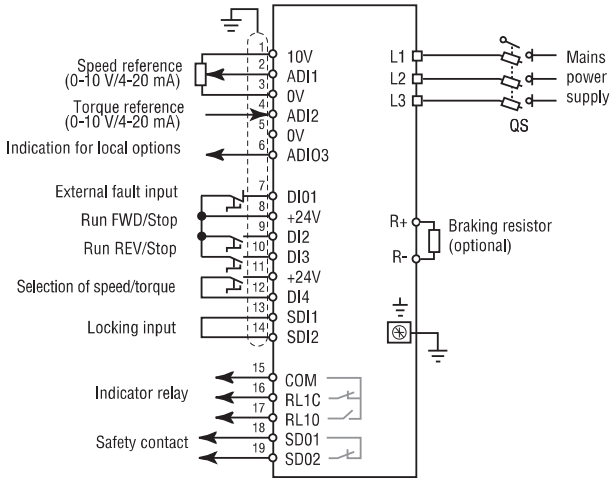


***Note***: For single-phase versions, the power supply is connected to terminals L and N.

**Selection table**

| DI4 | Selection |
|---|---|
| 0 | Speed-reference control via ADI1 |
| 1 | Torque-reference control via ADI2 and speed limiting via parameter **13** |

Note: • See manual 3776 for the connection and commissioning rules and the I/O characteristics
• The parameters must be set with the VARMECA 30 locked, i.e. jumper between terminals SDI1 and SDI2 or ENA and +24V open.
• The VARMECA 30 operates in positive logic.

DI01 terminal:• Configured as "External fault" input. For the drive to operate, this terminal must be connected to the + 24 V.

DI4 terminal: • Configured as "Selection of speed control or torque control with speed limiting". When connected to the + 24 V, the VARMECA 30 is in torque control with speed limiting.

**• Do not change from speed regulation to torque regulation when there is an active run command:**
**Parameters specific to the configuration accessible with the LCD KEYPAD option.**

| Parameter | Name | Type | Factory setting | Adjustment range |
|---|---|---|---|---|
| **11** | ADI1 MODE | R-W | 0-10 V | 0-20 mA; 20-0 mA; 4-20 mA detect; 20-4 mA detect; 4-20 mA no detect; 20-4 mA no detect; 0-10 V; Logic input<br><br>detect: with detection of 4 mA signal loss<br>no detect: without detection of 4 mA signal loss<br>(Address menu in manual reference 3997: 7.06) |
| **12** | ADI2 MODE | R-W | 0-10 V | 0-20 mA; 20-0 mA; 4-20 mA detect; 20-4 mA detect; 4-20 mA no detect; 20-4 mA no detect; 0-10 V; Logic input; PTC sensors<br><br>detect: with detection of 4 mA signal loss<br>no detect: without detection of 4 mA signal loss<br>(Address menu in manual reference 3997: 7.11) |
| **13** | MAXIMUM LIMIT | R-W | 1 500 $min^{-1}$ | 0 to 32000 $min^{-1}$<br>(Address menu in manual reference 3997: 1.06) |
| **14** to **24** | Not used | | | |

### 2.5.2.12 - FASTER/SLOWER CONFIGURATION (05 = FASTER/SLOWER, ESFR) IN VMA 31/32 WITH ESFR OPTION (05 = FASTER/SLOWER) IN VMA 33/34 WITH OR WITHOUT ESFR OPTION

**VARMECA 31/32**

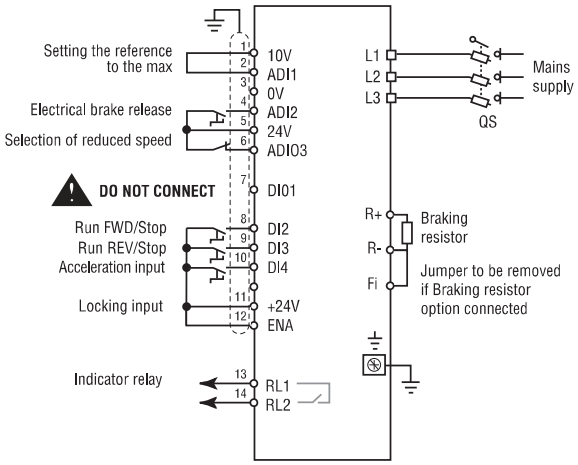


**VARMECA 33/34**

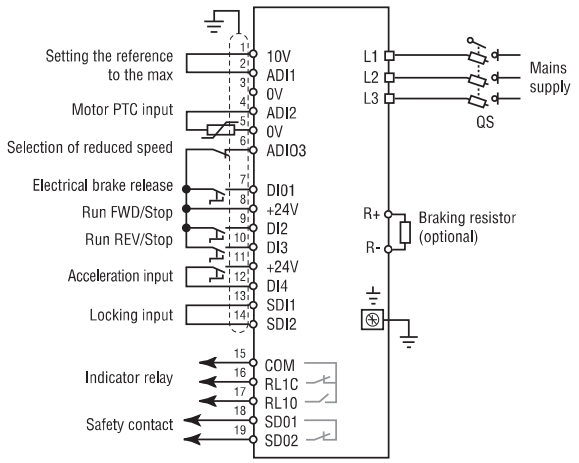


***Note***: For single-phase versions, the power supply is connected to terminals L and N.

DI01 terminal: ⚠ **this terminal must not be used.**

**Parameters specific to the configuration accessible with the LCD KEYPAD option:**

| Parameter | Name | Type | Factory setting | Adjustment range |
|---|---|---|---|---|
| **0.11** | PRESET REFERENCE 2 | R-W | 0000 | ± 32000 $min^{-1}$<br>Reduced speed setting<br>(Address menu in manual reference 3997: 1.22) |

**0.12 to 0.24 NOT USED**

**Parameters related to brake control:**

| Parameter | Name | Type | Factory setting | Adjustment range |
|---|---|---|---|---|
| **36** | BRAKE CONTROL | R-W | ON CONTACT | |
| **37** | BRAKE RELEASE CURRENT | R-W | 10.0% | 0 to 200.0% |
| **38** | BRAKE APPLY CURRENT | R-W | 10.0% | 0 to 200.0% |
| **39** | BRAKE RELEASE HZ | R-W | 1.0 Hz | 0 to 20.0 Hz |
| **40** | BRAKE APPLY HZ | R-W | 2.0 Hz | 0 to 20.0 Hz |
| **41** | MAGNETISATION TIME DELAY | R-W | 0.1 s | 0 to 25.0 s |
| **42** | RAMP UNLOCK TIME DELAY | R-W | 0.1 s | 0 to 25.0 s |

**For a description of operation of the faster/slower command, see page 26.**
**For a description of sequential brake control, see appendix.**

### 2.5.2.13 - FASTER/SLOWER CONFIGURATION (**05** = FASTER/SLOWER, NO ESFR) IN VMA 31/32 WITHOUT ESFR OPTION

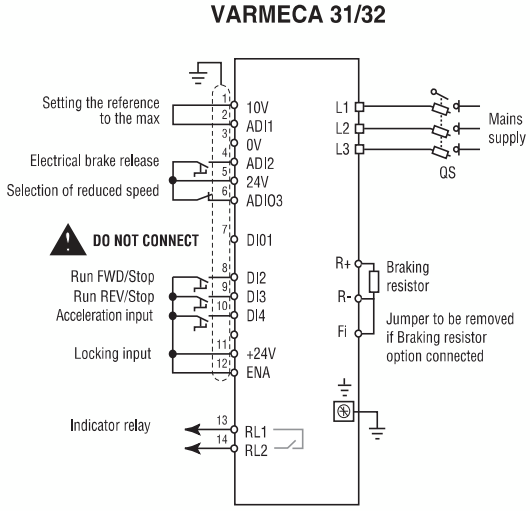


***Note***: For single-phase versions, the power supply is connected to terminals L and N.

**Parameters specific to the configuration accessible with the LCD KEYPAD option:**

| Parameter | Name | Type | Factory setting | Adjustment range |
|---|---|---|---|---|
| **0.11** | PRESET REFERENCE 2 | R-W | 0000 | ± 32000 $min^{-1}$<br>Reduced speed setting<br>(Address menu in manual reference 3997: 1.22) |

**Description of operation of the faster/slower command:**
This function is used to stabilise the speed at all levels between min. speed and max. speed.
The command operates by means of two contacts:
- a Run/Stop, Forward or Reverse contact which is used for starting up to a min. speed, and for maintaining intermediate speeds, (DI2, DI3)
- an acceleration contact which is used to reach the max. speed (terminal DI4)

An additional input is used to reduce the max. speed (when AI103 has been disabled). The faster/slower function can be used at any point down to the reduced speed. The reduced speed can be set in parameter **0.11**.

**Diagram:**

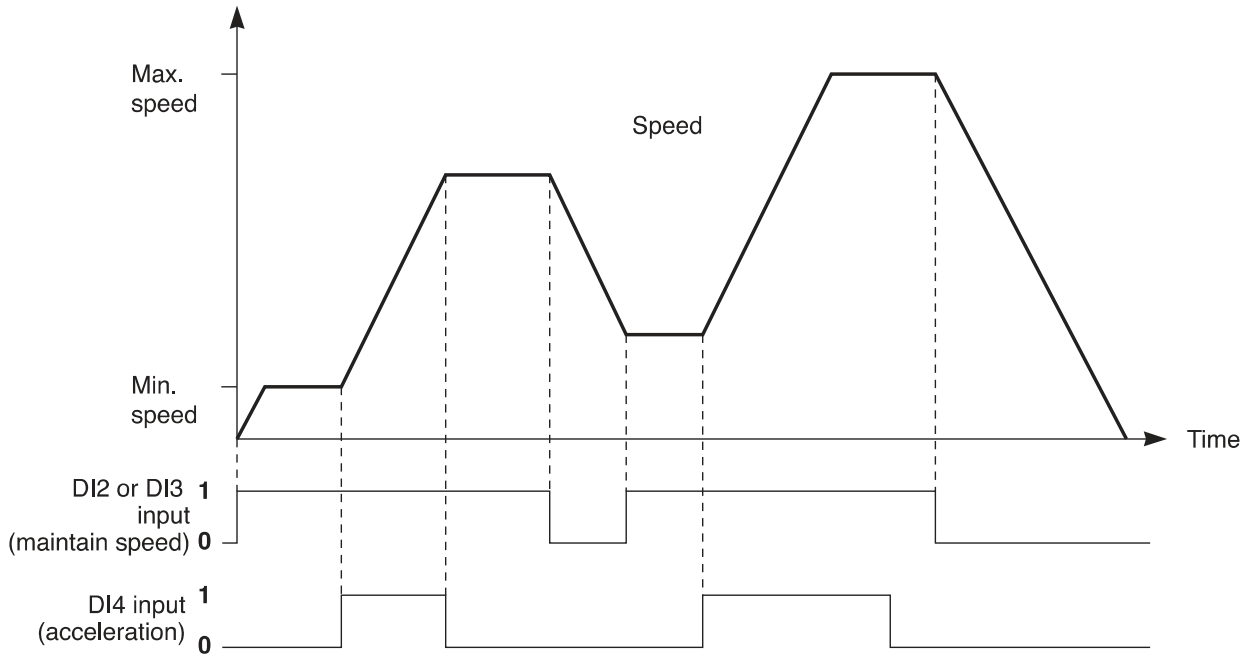

### 2.5.2.14 - MOTORISED POTENTIOMETER CONFIGURATION (05 = MOTORISED POT.)

**VARMECA 31/32**

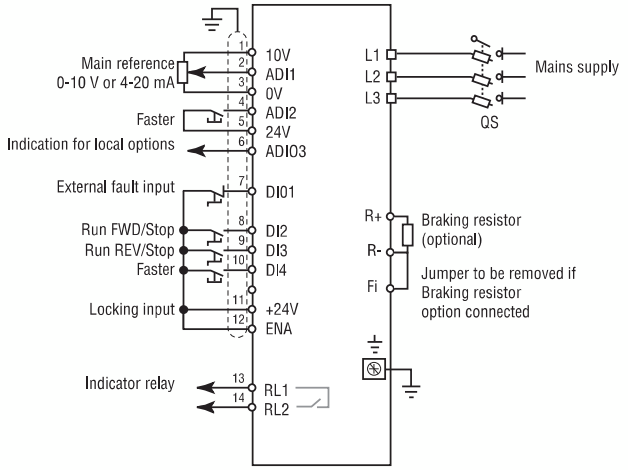


**VARMECA 33/34**

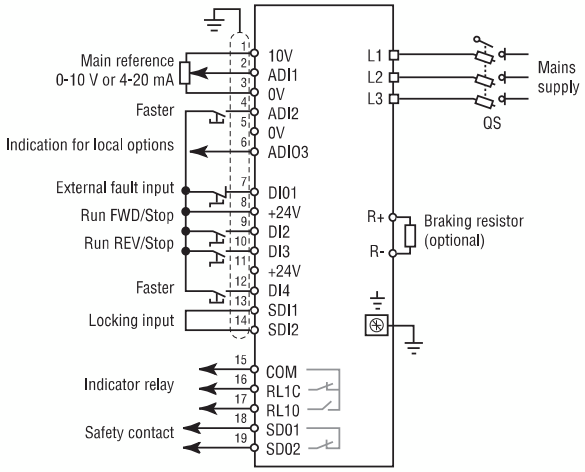


***Note***: For single-phase versions, the power supply is connected to terminals L and N.

- See manual 3776 for the connection and commissioning rules and the I/O characteristics.
- The parameters must be set with the VARMECA 30 locked, i.e. jumper between terminals SDI1 and SDI2 or ENA and +24V open.
- The VARMECA 30 operates in positive logic.

DI01 terminal:• Configured as "External fault" input. For the drive to operate, this terminal must be connected to the + 24 V.

**Parameters specific to the configuration accessible with the LCD KEYPAD option.**

| Parameter | Name | Type | Factory setting | Adjustment range |
|---|---|---|---|---|
| **11** | ADI1 MODE | R-W | 0-10 V | 0-20 mA; 20-0 mA; 4-20 mA detect; 20-4 mA detect; 4-20 mA no detect; 20-4 mA no detect; 0-10 V; Logic input<br><br>detect: with detection of 4 mA signal loss<br>no detect: without detection of 4 mA signal loss<br>(Address menu in manual reference 3997: 7.06) |
| **12** | RESET MOTORISED POT. REF. | R-W | No | No; Reset<br><br>When this parameter is at Reset, the faster/slower command reference is reset to zero.<br>(Address menu in manual reference 3997: 9.28) |
| **13** | FASTER / SLOWER RESET MODE. | R-W | RESET/ INACTIVE | RESET/ACTIVE; PREC/ACTIVE; RESET/INACTIVE; PREC/INACTIVE<br><br>**RESET/ACTIVE:** The reference is reset to 0 on each power-up. The faster/slower and reset inputs are continuously active.<br>**PREC/ACTIVE:** On power-up, the reference is at the level it was on power-down. The faster/slower and reset inputs are continuously active.<br>**RESET/INACTIVE:** The reference is reset to 0 on each power-up. The faster/slower inputs are only active when the drive output is active. The reset input is continuously active.<br>**PREC/INACTIVE:** On power-up, the reference is at the level it was on power-down. The faster/slower inputs are only active when the drive output is active. The reset input is continuously active.<br>(Address menu in manual reference 3997: 9.21) |

| Parameter | Name | Type | Factory setting | Adjustment range |
|---|---|---|---|---|
| **14** | MOTORISED POT. REF. POLARITY | R-W | Positive | Positive; Bi-directional<br><br>**Positive:** The faster/slower command reference is limited to positive values (0 to 100.0%).<br>**Bi-directional:** The faster/slower command reference can change from – 100% to + 100%.<br>(Address menu in manual reference 3997: 9.22) |
| **15** | MOTORISED POT. REF. RAMP | R-W | 20 s | 0 to 250 s<br><br>This parameter defines the time it takes for the faster/slower command reference to change from 0 to 100%.<br>It will take twice as long to change from –100.0% to +100.0%.<br>(Address menu in manual reference 3997: 9.23) |
| **16** | MOTORISED POT. REF. SCALE | R-W | 1.00 | 0 to 2.50<br><br>The maximum value of the faster/slower command reference automatically takes the maximum value of the parameter to which it is assigned.<br>This parameter can therefore be used to adapt the maximum value of the faster/slower command reference to the maximum value required by the application.<br>Example:<br>- The faster/slower reference is addressed to a preset reference.<br>- The maximum value of a preset reference is 32000þmin$^{-1}$.<br>- We wish the maximum value of the faster/slower reference to correspond to 1500 min$^{-1}$.<br>(Address menu in manual reference 3997: 9 .24) |
| **17** | MOTORISED POT. REFERENCE | RO | 0 | ± 100.0%<br><br>(Address menu in manual reference 3997: 9.03) |
| **18** to **24** | Not used | | | |

# VARMECA 30
## Variable speed motors and geared motors
COMMISSIONING USING THE PADVMA30 KEYPAD



### 2.5.2.15 - KEYPAD CONFIGURATION (**05** = PADVMA30)

**VARMECA 31/32**

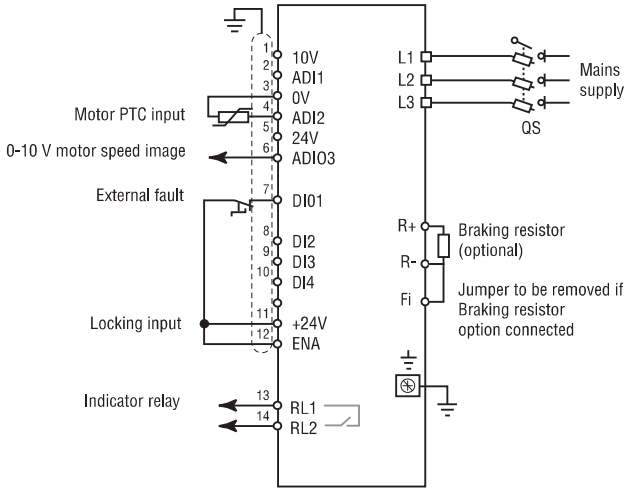


**VARMECA 33/34**

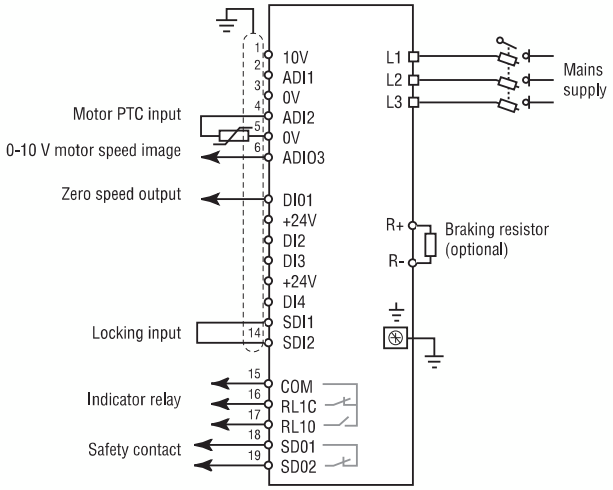


***Note***: For single-phase versions, the power supply is connected to terminals L and N.

- See manual 3776 for the connection and commissioning rules and the I/O characteristics.
- The parameters must be set with the VARMECA 30 locked, i.e. jumper between terminals SDI1 and SDI2 or ENA and +24V open.
- The VARMECA 30 operates in positive logic.

DI01 terminal (VMA 31/32) : Configured as "External fault" input. For the drive to operate, this terminal must be connected to the + 24 V.

**The local control options (B31/32 - BMA 31/32 - BMAVAR 31/32 - B 33/34 - BMA 33/34 - BMAVAR 33/34) are not compatible with the use of the PAD VMA30 option**

**Presentation of the operator display:**

The PADVMA30 operator display consists of a display unit, three control buttons and three parameter-setting keys.

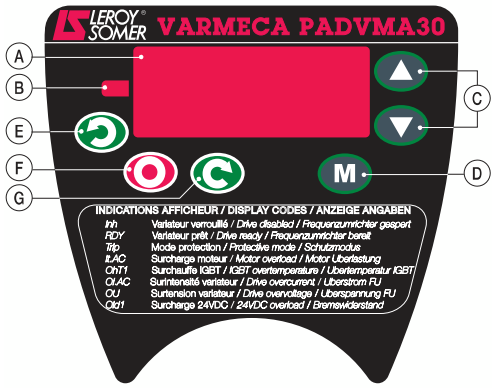


| Ref. | Function |
|---|---|
| A | Display comprising 4 x 7-segment digits for indicating:<br>- the drive operating status<br>- certain operating data<br>- the adjustment parameters (**01** to **80**) and their value |
| B | LED providing a sign for the data<br>(the lit LED corresponds to the " - " sign) |
| C | Keys which can be used to scroll up and down through the parameters or their value. These keys can also be used to vary the speed. |
| D | Keys which can be used to switch from standard mode to parameter-setting mode.<br>In parameter-setting mode, the parameter number and value are displayed alternately on the display. |
| E<br>F<br>G | In keypad mode, these buttons are used for the following commands:<br>- Reverse<br>- Stop, clear fault<br>- Forward |

# VARMECA 30

## Variable speed motors and geared motors

COMMISSIONING USING THE PADVMA30 KEYPAD

**Selection and modification of a parameter:**

**- This procedure has been drawn up for initial commissioning.**
**- If the drive is already powered up, the first parameter displayed may not be 01. Simply select the parameter to be displayed or modified using the ▲ or ▼ keys.**

**Change from parameter-setting mode to read mode:**
**- To switch from parameter-setting mode to read mode, press the M key for 3 seconds.**
**- In parameter-setting mode, if there is no operator action for 45 seconds (VMA31/32) or 240 seconds (VMA 33/34), the display stops flashing and returns automatically to the initial drive status.**

**- The KEYPAD LCD console or the XPRESS KEY must not be connected to the RJ45 socket available on the PADVMA31/VMA32.**

| Action | Function |
|---|---|
| 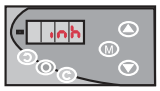 | Power-up<br>Drive locked (JUMPER between SDI1 and SDI2 or ENA and +24V open).<br>Display in "Read" mode (initial status) |
| 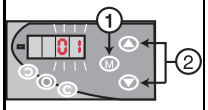 | **1:** Access to parameter-setting mode. Press the M key. Parameter **01** is displayed, flashing alternately with its value.<br>**2:** The ▲ and ▼ keys are used to access the parameter to be modified. For example, press ▲ to select parameter **04**. |
| 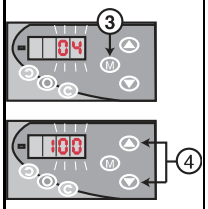 | **3:** Access to parameter modification. Press the M key. The parameter value freezes.<br>**4:** Press and hold down the ▲ or ▼ key, to quickly scroll through the parameter value. The final setting is made by short presses on the same key. |
| 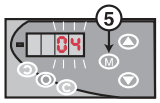 | **5:** Press the M key. The new value of **04** is stored, and the parameter flashes alternately with its value.<br>Press the ▲ and ▼ keys to select a new parameter to be modified. |
| 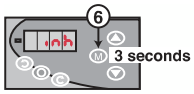 | **6:** Return to the initial drive status. |

**Parameters specific to the configuration accessible from the keypad**

| Parameter | Name | Type | Factory setting | Adjustment range |
|---|---|---|---|---|
| **11** | POWER-UP KEYPAD CONTROL MODE REFERENCE | R-W | rSEt | rSEt: at zero; Prec: identical to the reference at the time of powering down; Pr1: identical to RP1 |
| **12** | REFERENCE ON POWER-UP (RP1) | R-W | 0 | ± Maximum limit (**02**) $min^{-1}$ |
| **13** | ENABLE FORWARD KEY | R-W | 1 (On) | 0 (OFF), 1 (On) |
| **14** | ENABLE STOP KEY | R-W | 1 (On) | 0 (OFF), 1 (On) |
| **15** | ENABLE KEYPAD REVERSE KEY | R-W | 0 (OFF) | 0 (OFF), 1 (On) |
| **16** to **24** | NOT USED | | | |

## COMMISSIONING USING THE PAD VMA 30 OPTION

**THIS OPTION CAN BE INTEGRATED ON DRIVE VERSIONS 1.10 AND LATER.**

### VMA 31/32

- Power down the drive.
- Connect the option to the drive via the RJ45 socket.
- Lock the VMA 31/32 using terminals 11-12, then power it up. The display must show "inh".
- Access parameter 65 (return to factory settings) using the keys for scrolling through the parameters.
- Change the parameter to "ON" then save. After a few seconds, the parameter returns to "OFF".
- The PAD VMA 31/32 option is enabled.

### VMA 33/34

- Power down the drive.
- Connect the option to the drive via the 20-pin connector.
- Lock the VMA 33/34 using terminals SD11 and SD12, then power it up. The display must show "inh".
- Access parameter 05 (selection of the configuration) using the keys for scrolling through the parameters.
- Change the parameter to "C9" then save.
- The PAD VMA 33/34 option is enabled.

## INFORMATION ON OPERATION

This provides the user with information on the status of the drive when it is stopped or in operation.

| | Comment |
|---|---|
| **Auto/tunE** | - Auto and tunE alternately displayed<br>- Autocalibration phase in progress |
| **dEc** | - Deceleration in progress after a stop command |
| **inh** | - The drive is locked and cannot start the motor<br>- Freewheel stop |
| **rdY** | - The drive is unlocked and waiting for a command<br>- The motor is ready to operate |
| **StoP** | - The drive maintains the motor torque at zero speed |
| **triP** | - The drive has switched to protective mode<br>- Alternating display of triP and the fault code (for the meaning of the code, see section 5.2) |
| **Alar./USrx** | - Alternating display of Alar. and USrx, where x is the customer fault number (1 to 4).<br>- Alarms enabled by **10.54** to **10.57** (refer to the extended functions manual ref. 3997) |

## SWITCHING TO PROTECTIVE MODE

If the drive switches to protective mode, the drive output bridge is inactive and the drive no longer controls the motor.
The display alternately indicates "triP" and the fault code.
All the faults indicated by the display are listed in the table in section 3: Switching to protective mode - Diagnostics.

## CORRESPONDANCE BETWEEN THE CONFIGURATIONS OF THE PXLCD CONSOLE AND THE PADVMA30 DISPLAY UNIT

| Configuration | PXLCD | PAD VMA31/32 | PAD VMA33/34 |
|---|---|---|---|
| Standard | Standard | Std | Std |
| Standard with 3-wire control | Standard + JOG | PULS | PULS |
| Standard with enabling of PID | Standard + PID | PID | PID |
| 1 analogue reference + 3 PS without ESFR | 3VP + 1 ANALOG. | C1 | C1 |
| 1 analogue reference + 3 PS with ESFR | 3VP1AN. ESFR | C2 | / |
| 8 preset speeds | 8VP | C3 | C2 |
| Correction of a reference via local button | LOCAL/REM. | C4 | C3 |
| Correction of 2 PS via local button | 2VP PROP. B | C5 | C4 |
| Pump regulation | PUMPS VENT. | C6 | C5 |
| Torque control | TORQUE CTRL | C7 | C6 |
| Faster/slower with ESFR | FSTR/SLWR, ESFR | C8 | / |
| Faster/slower without ESFR | FSTR/SLWR, NO ESFR | C9 | C7 |
| Motorised potentiometer | MOTORISED POT. | C10 | C8 |
| PADVMA30 display unit | PAD (VMA33/34) | / | C9 |
| Parameter setting is open | ANY | C11 | OPEN |

## 2.5.3 - Rest of the simplified menu

**Selection of the control mode**

| Parameter | Name | Type | Factory setting | Adjustment range |
|---|---|---|---|---|
| **VMA 31/32** | | | | SR: EACH Run, SR: NOT Meas, U/F linear, SR: 1st RUN, SR: POWER-UP, U/F Quadrat.<br><br>Determines the open loop control mode. The difference between these modes is the method used to identify the motor parameters, particularly the stator resistance. These parameters vary with the temperature, and as they are essential for obtaining optimum performance levels, the machine cycle must be taken into account for selecting the most appropriate mode. U/F linear and U/F Quadratic modes correspond to a control mode by a U/F ratio. This ratio is linear in U/F mode and quadratic in U/F Quadratic mode.<br><br>**SR: EACH Run:** The stator resistance and voltage offset are measured each time the drive receives a run command. These measurements are only valid if the machine is stopped, and totally defluxed. The measurement is not taken when the run command is given less than 2 seconds after the previous stop. This is the most effective flux vector control mode. However, the operating cycle should be compatible with the 2 seconds required between a stop command and a new run command. |
| **25** | OPEN LOOP MODE | R-W | SR/1st RUN | **SR: NOT Meas:** The stator resistance and voltage offset are not measured. This mode is of course the least effective. It should only be used when SR: EACH Run mode is incompatible with the operating cycle.<br><br>**U/F linear:** voltage-frequency ratio with fixed boost adjustable via parameters **29** and **30**.<br>**CAUTION: Use this mode to control several motors.**<br><br>**SR: 1st RUN:** The stator resistance and voltage offset are measured the first time the drive is unlocked.<br><br>**SR/ POWER-UP:** The stator resistance and voltage offset are measured after the first unlocking operation following each power-up.<br><br>**U/F Quadrat.:** quadratic voltage/frequency ratio.<br><br>**• In SR mode: Power-up, a voltage is briefly applied to the motor. For safety reasons, no electrical circuit should be accessible once the drive is powered up.**<br>(Address menu in manual reference 3997: 5.14) |
| **26** to **28** | Not used | | | |

# VARMECA 30
## Variable speed motors and geared motors
COMMISSIONING USING THE LCD KEYPAD MICRO CONSOLE

| Parameter | Name | Type | Factory setting | Adjustment range |
|---|---|---|---|---|
| **29** | BOOST ON U/F RATIO | R-W | 00.0% | 0 to 25%<br>For operation in U/F mode, this parameter is used to overflux the motor at low speed so that it delivers more torque on starting. It is a percentage of the rated motor voltage (**08**).<br> 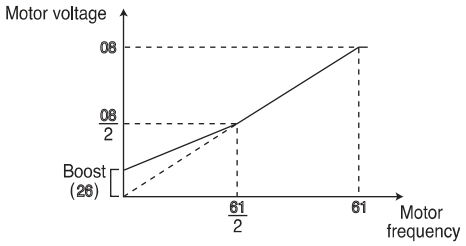 <br>(Address menu in manual reference 3997: 5.15) |
| **30** | Not used | | | |
| **31** | CURRENT PROPORT. GAIN | R-W | 20 | 0 to 250<br>Due to a certain number of internal drive factors, oscillations may occur in the following cases:<br>– Frequency regulation with current limiting around the rated frequency and on load impacts.<br>– Torque regulation on machines with a low load and around the rated speed.<br>– On a mains supply break or on a controlled deceleration ramp when DC bus regulation is requested.<br>To reduce these oscillations, we recommend that you first:<br>– Increase the proportional gain **31**<br>– Then reduce the integral gain **32**<br>(Address menu in manual reference 3997: 4.13) |
| **32** | CURRENT INTEGRAL GAIN | R-W | 40 | 0 to 250<br>(Address menu in manual reference 3997: 4.14) |
| **VMA 33/34**<br>**25** | DRIVE MODE | R-W | OPEN LOOP | Open loop, CL.LP vector, SERVO<br>**Open loop:** The drive is in open loop control. Open loop control mode is defined by the setting of parameter **26**.<br>**CL.LP vector:** The drive is controlling an induction motor in closed loop flux vector control. The type of encoder and control mode are defined by parameters **26** to **33**.<br>**Servo:** The drive is controlling a synchronous motor. The type of encoder and control mode are defined by parameters **26** to **33**.<br>This parameter is used to select the control mode. A return to factory settings procedure does not modify the operating mode.<br>The operating mode can only be selected when the drive is stopped.<br>**Note:** The change from open loop mode (**Open loop**) to closed loop mode (**CL.LP vector**), or vice-versa, initiates a return to factory settings of parameters **40** (brake apply frequency or brake apply speed) and **41** (magnetisation time delay/ speed threshold).<br>(Address menu in manual reference 3997: 11.31) |

Parameters specific to the VMA 33/34.

• **If 25 = Open Loop**

| Parameter | Name | Type | Factory setting | Adjustment range |
|---|---|---|---|---|
| **26** | OPEN LOOP MODE | R-W | SR/1st RUN | SR: EACH Run, SR: NOT Meas, U/F linear, SR: 1st RUN, SR: POWER-UP, U/F Quadrat.<br><br>Determines the open loop control mode. The difference between these modes is the method used to identify the motor parameters, particularly the stator resistance. As these parameters vary with the temperature, and are essential for obtaining optimum performance levels, the machine cycle must be taken into account for selecting the most appropriate mode. U/F and QUASI SQUARE modes correspond to a control mode by a U/F ratio. This ratio is linear in U/F mode and quadratic in QUASI SQUARE mode.<br><br>**SR: EACH Run:** The stator resistance and voltage offset are measured each time the drive receives a run command. These measurements are only valid if the machine is stopped, and totally defluxed. The measurement is not taken when the run command is given less than 2 seconds after the previous stop. This is the most effective flux vector control mode. However, the operating cycle should be compatible with the 2 seconds required between a stop command and a new run command.<br><br>**SR: NOT Meas:** The stator resistance and voltage offset are not measured. This mode is of course the least effective. It should only be used when SR : EACH Run mode is incompatible with the operating cycle.<br><br>**U/F:** Voltage-frequency ratio with fixed boost adjustable via parameters 29 and 30.<br>**CAUTION: Use this mode to control several motors.**<br><br>**SR: 1st RUN:** The stator resistance and voltage offset are measured the first time the drive is unlocked.<br><br>**SR/ POWER-UP:** The stator resistance and voltage offset are measured after the first unlocking operation following each power-up.<br><br>**U/F Quadrat.:** Quadratic voltage/frequency ratio.<br><br>**• In SR mode: Power-up, a voltage is briefly applied to the motor. For safety reasons, no electrical circuit should be accessible once the drive is powered up.**<br>(Address menu in manual reference 3997: 5.14) |

Parameters specific to the VMA 33/34.

**• If 25 = Open Loop and 26 = SR: EACH Run, SR: NOT Meas, SR: 1st RUN, SR/POWER-UP, U/F: Quadrat.**

| Parameter | Name | Type | Factory setting | Adjustment range |
|---|---|---|---|---|
| **27** to **30** | Not used | | | |
| **31** | CURRENT PROPORT. GAIN | R-W | 20 | 0 to 25<br>Due to a certain number of internal drive factors, oscillations may occur in the following cases:<br>- Frequency regulation with current limiting around the rated frequency and on load impacts<br>- Torque regulation on machines with a low load and around the rated speed<br>- on a mains supply break or on a controlled deceleration ramp when DC bus regulation is requested.<br>To reduce these oscillations, we recommend that you first:<br>- Increase the proportional gain **31**<br>- Then reduce the integral gain **32**<br>(Address menu in manual reference 3997: 4.13) |
| **32** | CURRENT INTEGRAL GAIN | R-W | 40 | 0 to 25<br>(Address menu in manual reference 3997: 4.14) |
| **33** to **35** | Not used | | | |

**• If 25 = Open Loop and 26 = U/F**

| Parameter | Name | Type | Factory setting | Adjustment range |
|---|---|---|---|---|
| **27** and **28** | Not used | | | |
| **29** | BOOST ON U/F RATIO | R-W | 0% | 0 to 25%<br><br>For operation in U/F mode, this parameter is used to overflux the motor at low speed so that it delivers more torque on starting. It is a percentage of the rated motor voltage (**08**).<br><br> 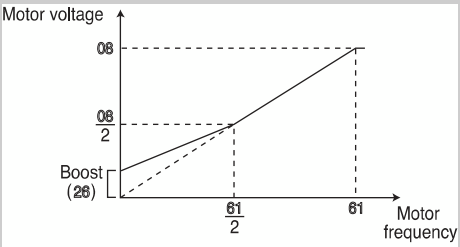 <br><br>(Address menu in manual reference 3997: 5.15) |
| 30 | U/F RATIO | R-W | Fixed | Fixed; Dynamic<br><br>**Fixed:** The U/F ratio is fixed and set by the base frequency (**08**).<br>**Dynamic:** Dynamic U/F ratio. Generates a voltage/frequency characteristic which varies with the load. It is for use in quadratic torque applications (pumps/fans/etc). It can be used in constant torque applications with low dynamics to reduce motor noise.<br>(Address menu in manual reference 3997: 5.13) |
| 31 to 35 | Not used | | | |

Parameters specific to the VMA 33/34.

**• If 25 = BF Vector**

| Parameter | Name | Type | Factory setting | Adjustment range |
|---|---|---|---|---|
| **26** | SENSOR TYPE | R-W | INCREMENTAL | INCREMENTAL; INCREM.FD; INCREM.FWD/REV; INCREM. UVW; HALL EFFECT; NO MODE 1 NO MODE 2; NO MODE 3; NO MODE 4<br>**INCREMENTAL:** Quadrature incremental encoder.<br>**INCREM.FD:** Incremental encoder with Frequency/Direction output.<br>**INCREM.FWD/REV:** Incremental encoder with FWD/REV outputs.<br>**INCREM. UVW:** Incremental encoder with commutation channels.<br>**HALL EFFECT:** Hall effect sensor.<br>**NO MODE 1 to 4:** sensorless mode 1 to mode 4.<br>(Address menu in manual reference 3997: 3.38) |
| **27** | NO. PTS/ENCODER REV. | R-W | 1024 ppr | 0 to 32000<br>Used to configure the number of points per encoder revolution. Converts the encoder input into a speed.<br>(Address menu in manual reference 3997: 3.34) |
| **28** | ENCODER FILTER | R-W | 0 ms | 0 to 16 ms<br>This parameter is used to insert a moving average filter on the encoder speed feedback. This is particularly useful for attenuating the current demand when the load has a high inertia and when a high gain is necessary on the speed loop. If the filter is not enabled under these conditions, the speed loop output may change continuously from one current limit to another, blocking the integral function of the speed loop.<br>The filter is inactive if **28** = 0.<br>(Address menu in manual reference 3997: 3.42) |
| **29** | SPEED PROPORT. GAIN | R-W | 200 | 0 to 32000<br>Adjusts the stability of the motor speed in the event of sudden variations in the reference.<br>Increase the proportional gain until vibrations occur in the motor, then reduce the value by 20 to 30%, checking that the motor remains stable in the event of sudden variations in speed, both at no load and on load.<br>(Address menu in manual reference 3997: 3.10) |
| **30** | SPEED INTEGRAL GAIN | R-W | 100 | 0 to 32000<br>Adjusts the stability of the motor speed on load impact.<br>Increase the integral gain so that the same speed is obtained on load and at no load in the event of load impact.<br>(Address menu in manual reference 3997: 3.11) |

Parameters specific to the VMA 33/34.

| Parameter | Name | Type | Factory setting | Adjustment range |
|---|---|---|---|---|
| **31** | CURRENT PROPORT. GAIN | R-W | 20 | 0 to 250<br><br>Due to a certain number of internal drive factors, oscillations may occur in the following cases:<br>– Frequency regulation with current limiting around the rated frequency and on load impacts<br>– Torque regulation on machines with a low load and around the rated speed<br>– On a mains supply break or on a controlled deceleration ramp when DC bus regulation is requested.<br>To reduce these oscillations, we recommend that you first:<br>– Increase the proportional gain **31**<br>– Then reduce the integral gain **32**<br>(Address menu in manual reference 3997: 4.13) |
| **32** | CURRENT INTEGRAL GAIN | R-W | 40 | 0 to 250<br><br>(Address menu in manual reference 3997: 4.14) |
| **33** | RAMP ENABLE | R-W | No | Yes/No<br><br>**No:** ramps short-circuited.<br>(Address menu in manual reference 3997: 2.02) |
| **34** and **35** | Not used | | | |

• **If 25 = Servo** (same table - see above)

**Requires a servomotor.**

**Configuration of terminal DI01 on VMA 31/32 ONLY**

| Parameter | Name | Type | Factory setting | Adjustment range |
|---|---|---|---|---|
| **33** | DI01 I/O INVERT | R-W | YES<br>(or NO<br>if 36 = contact) | YES/NO<br><br>Used to invert digital input or output DI01<br>(Address menu in manual reference 3997: 8.11) |
| **34** | DI01 TERMINAL CONFIGUR. | R-W | INPUT<br>(or OUTPUT<br>if 36 = contact) | INPUT/OUTPUT<br><br>Used to configure terminal DIO1 as input or output.<br>(Address menu in manual reference 3997: 8.31) |
| **35** | DI01 INP./OUTP. DESTINAT. | R-W | 1061<br>(or 1240<br>if 36 = contact) | 0.00 to 16.89<br><br>This parameter selects the destination of the DI01 input or source.<br>(Address menu in manual reference 3997: 8.21) |

Parameters specific to the VMA 33/34.

**Selection of brake control and setting its parameters**

| Parameter | Name | Type | Factory setting | Adjustment range |
|---|---|---|---|---|
| **36** | BRAKE CONTROL | R-W | Disabled | Disabled; On contact; On relay; Any assignment<br><br>Used to enable brake control and to select to which logic output it will be assigned.<br>**Disabled:** Brake control is not enabled.<br>**On contact:** Brake control is enabled and directed towards the ESFR option.<br>(Address menu in manual reference 3997: 12.41) |

**• If 36 = Disabled**

| Parameter | Name | Type | Factory setting | Adjustment range |
|---|---|---|---|---|
| **37** to **44** | Not used | | | |

**• If 36 = On contact (with 25 = Open loop)**

| Parameter | Name | Type | Factory setting | Adjustment range |
|---|---|---|---|---|
| **37** | BRAKE RELEASE CURRENT THRESHOLD | R-W | 10% | 0 to 200%<br><br>Used to adjust the current threshold at which the brake will be controlled. This current level should provide sufficient torque at the time the brake is released.<br>(Address menu in manual reference 3997: 12.42) |
| **38** | BRAKE APPLY CURRENT THRESHOLD | R-W | 10% | 0 to 200%<br><br>Used to adjust the current threshold below which brake control will be disabled. It should be adjusted so that loss of the motor power supply is detected.<br>**Note:** This parameter is not active in closed loop mode with software versions ≤ V2.0.<br>(Address menu in manual reference 3997: 12.43) |
| **39** | BRAKE RELEASE Hz THRESHOLD | R-W | 1.0 Hz | 0 to 20 Hz<br><br>Used to adjust the frequency threshold at which the brake will be controlled. This frequency level should provide sufficient torque to drive the load in the right direction at the time the brake is released. This threshold is usually set at a value slightly above the frequency corresponding to the motor slip at full load.<br>Example:<br>– 1500 $min^{-1}$ = 50 Hz<br>– Rated on-load speed = 1470 $min^{-1}$<br>– Slip = 1500 – 1470 = 30 $min^{-1}$<br>– Slip frequency = 30/1500 × 50 = 1 Hz.<br>(Address menu in manual reference 3997: 12.44) |

Parameters specific to the VMA 33/34.

| Parameter | Name | Type | Factory setting | Adjustment range |
|---|---|---|---|---|
| **40** | BRAKE APPLY Hz THRESHOLD | R-W | 2.0 Hz | 0 to 20 Hz<br>Used to adjust the frequency or speed threshold at which brake control will be disabled. This threshold enables the brake to be applied before zero speed so as to avoid load veering while the brake is being applied.<br>If the frequency or speed drops below this threshold when no stop request has been made (change of direction of rotation), brake control will remain activated. This exception can be used to avoid the brake being engaged as the speed passes though zero.<br>**Note:** This parameter is not active in closed loop mode with software versions ≤ V2.0.<br>(Address menu in manual reference 3997: 12.45) |
| **41** | MAGNETISATION TIME DELAY | R-W | 0.1 s | 0 to 25 s<br>This time delay is triggered when all the conditions for brake release have been met. It enables enough time to be left to establish an adequate level of magnetising current in the motor and to ensure that the slip compensation function is fully activated. When this time delay has elapsed, brake control is enabled.<br>(Address menu in manual reference 3997: 12.42) |
| **42** | TIME DELAY BEFORE RAMP UNLOCK | R-W | 0.1 s | 0 to 25 s<br>This time delay is triggered when brake control is enabled. It is used to allow time for the brake to release before unlocking the ramp.<br>(Address menu in manual reference 3997: 12.47) |
| **43** | Not used | | | |
| **44** | Not used | | | |
| **45** | Not used | | | |

Parameters specific to the VMA 33/34.

**• If 36 = On contact, On relay or Any assignment with 25 = CL LP Vector (VMA33/34)**

| Parameter | Name | Type | Factory setting | Adjustment range |
|---|---|---|---|---|
| **37** | Not used | | | |
| **38** | BRAKE APPLY CURRENT THRESHOLD | R-W | 10% | 0 to 200%<br>Used to adjust the current threshold below which brake control will be disabled. It should be adjusted so that loss of the motor power supply is detected.<br>**Note:** This parameter is not active in closed loop mode with software versions ≤ V2.0.<br>(Address menu in manual reference 3997: 12.43) |
| **39** | Not used | | | |
| **40** | BRAKE APPLY Vt THRESHOLD | R-W | 5 $min^{-1}$ | 0 to 100 $min^{-1}$<br>Used to adjust the frequency or speed threshold at which brake control will be disabled. This threshold enables the brake to be applied before zero speed so as to avoid load veering while the brake is being engaged.<br>If the frequency or speed drops below this threshold when no stop request has been made (change of direction of rotation), brake control will remain activated. This exception can be used to avoid the brake being engaged as the speed passes though zero.<br>**Note:** This parameter is not active in closed loop mode with software versions ≤ V2.0.<br>(Address menu in manual reference 3997: 12.45) |
| **41** | BRAKE APPLY TIME DELAY | R-W | 0.3 s | This time delay delays the brake apply command in relation to passing below the minimum speed threshold (40). It is useful for avoiding repeated application and release of the brake during operation around zero speed.<br>(Address menu in manual reference: 12.46) |
| **42** | TIME DELAY BEFORE RAMP UNLOCK | R-W | 1.00 s | 0 to 25 s<br>This time delay is triggered when brake control is enabled. It is used to allow time for the brake to release before unlocking the ramp.<br>(Address menu in manual reference 3997: 12.47) |
| **43** | BRAKE APPLY TIME DELAY | R-W | 1.00 s | 0 to 25 s<br>This time delay is used to maintain the torque at standstill while the brake is applied. When this time delay has elapsed, the drive output is deactivated.<br>**Note:** This parameter is not active in closed loop mode with software versions ≤ V2.0.<br>(Address menu in manual reference 3997: 12.48) |
| **44** | BRAKE POSITION CONTROL | RO | Disabled | Disabled; Enabled<br>**Disabled:** The brake is not controlled.<br>**Enabled:**The brake is unlocked.<br>(Address menu in manual reference 3997: 12.49) |
| **45** | Not used | | | |

Parameters specific to the VMA 33/34.

**Additional parameter settings**

| Parameter | Name | Type | Factory setting | Adjustment range |
|---|---|---|---|---|
| **46** | MANAGING MICRO-CUTS | R-W | No stop | Disabled; stop; Auto restart<br><br>**Disabled:** The drive does not take account of mains supply breaks and continues to operate as long as the DC bus voltage is adequate.<br>**Stop:** If there is a mains supply break, the drive will decelerate on a ramp, which is automatically calculated by the drive, so that the motor feeds back the energy to the drive's DC bus and thus continues to supply its control electronics. On return to normal conditions, the deceleration continues until the motor stops.<br>**Auto restart:** If there is a mains supply break, the drive will decelerate on a ramp, which is automatically calculated by the drive, so that the motor feeds back the energy to the drive's DC bus and thus continues to supply its control electronics. On return to normal conditions, the motor re-accelerates up to reference speed.<br>(Address menu in manual reference 3997: 6.03) |
| **47** | Not used | | | Can be assigned by parameter **73** |
| **47** | MANAGEMENT OF SDI INPUT | R-W | UNLOCK | UNLOCK; SECURE DISABLE<br><br>**UNLOCK:** The SDI input is used as a simple locking input.<br>**SECURE DISABLE:** The SDI input is used as a secure disable input.<br>In order to conform to safety standard EN 954-1 category 3, the drive must be wired in accordance with the recommended diagram (section 3.4).<br>**Note: 47** must be modified with the drive locked.<br>CAUTION:<br>The factory setting of **47** is 0 (Enab) for the 11 Pad configuration (**05** = **9**). The same applies if the drive is controlled via fieldbus or an LCD keypad.<br>(Address menu in manual reference 3997: 8.10) |
| **48** | PRODUCT IDENTIF. CODE | RO | - | 0 to 32000<br><br>This product code gives information on the drive rating, size, hardware version and variant.<br>When the nameplate is not visible, this code can be given to your LEROY-SOMER contact.<br>(Address menu in manual reference 3997: 11.60) |
| **49-50** | Not used (VMA 31/32) | | | Can be assigned by parameters **74** and **75** |
| **49** | ADIO3 CONTROL | R-W | Any | Motor speed; Motor load; Motor current; Motor power; Any<br><br>This parameter is used to assign the ADIO3 function quickly when it is being used as an output.<br>**Mot. Speed:** ADIO3 is assigned to Motor speed.<br>**Motor load:** ADIO3 is assigned to Motor load.<br>**Motor current:** ADIO3 is assigned to Motor current.<br>**Motor power:** ADIO3 is assigned to Motor power.<br>If ADIO3 is used as an input, **49** in forced to Any.<br>When **49** = Any, assignment is at the user's discretion. Refer to the "extended functions" manual ref. 3756.<br>(Address menu in manual reference 3997: 7.15) |

Parameters specific to the VMA 33/34.

| Parameter | Name | Type | Factory setting | Adjustment range |
|---|---|---|---|---|
| **50** | DIO1 CONTROL | R-W | Any | Zero speed;Ref. reached; Min. speed; Rated load reached; Drive active; Gen. alarm; Current lim; Jogging input; Reset input; Any<br><br>This parameter is used to assign the DIO1 function quickly.<br>**Zero speed:** Zero speed output<br>**Ref. reached:** Reference reached output<br>**Min. speed:** Minimum speed output<br>**Rated load reached:** Rated load reached output<br>**Drive active:** Drive active output<br>**Gen. alarm:** Drive general alarm output<br>**Current lim:** Current limit output<br>**Jogging input:** Jog input<br>**Reset input:** Reset input<br>**Any:** Any assignment<br>(Address menu in manual reference 3997: 8.41) |
| **51** | JOG REFERENCE | R-W | 45 $min^{-1}$ | 0 to 16000 $min^{-1}$<br><br>Operating frequency when the jog operation input has been selected.<br>(Address menu in manual reference 3997: 1.05) |
| **52** | BIPOLAR MODE ENABLE | R-W | + ref. only | + ref. only; + and – ref.<br><br>**+ ref. only:** All negative references are treated as zero.<br>**+ and – ref:** Used to change the direction of rotation by the reference polarity. May come from preset references.<br>(Address menu in manual reference 3997: 1.10) |
| **53** | SPEED SKIP 1 | R-W | 0 $min^{-1}$ | 0 to 32000 $min^{-1}$<br><br>A skip is available to avoid a machine running at a critical speed. When the parameter is at 0, the function is deactivated.<br>(Address menu in manual reference 3997: 1.29) |
| **54** | SKIP WIDTH 1 | R-W | 15 $min^{-1}$ | 0 to 300 $min^{-1}$<br><br>Defines the skip width around the avoided speed. The total skip will therefore equal the threshold set ± skip width. When the reference is within the window determined in this way, the drive will restore the speed corresponding to the lower value in the window.<br>(Address menu in manual reference 3997: 1.30) |

Parameters specific to the VMA 33/34.

| Parameter | Name | Type | Factory setting | Adjustment range/Description |
|---|---|---|---|---|
| **55** | DECELERATION MODE | R-W | Auto ramp | Fixed ramp; Auto ramp; Auto ramp +; Fixed ramp +<br><br>**Fixed ramp:** Deceleration ramp imposed. If the deceleration ramp which has been set is too fast in relation to the inertia of the load, the DC bus voltage exceeds its maximum value and the drive switches to overvoltage fault "OU".<br>**CAUTION:**<br>**Select this mode when a braking resistor is being used.**<br>**Auto ramp:** Standard deceleration ramp with automatic extension of the ramp time in order to avoid causing a DC bus overvoltage fault on the drive.<br>**Auto ramp +:** The drive allows the motor voltage to be increased up to 1.2 times the rated voltage set in **08** (motor rated voltage), to avoid reaching the maximum DC bus voltage threshold. However, if this is inadequate, the standard deceleration ramp time is extended, to avoid causing a DC bus overvoltage fault on the drive.<br>For the same quantity of energy, Auto ramp + mode enables faster deceleration than Auto ramp mode.<br>**Fixed ramp +:** Same as Auto ramp + mode, but the ramp is imposed.<br>If the configured ramp is too fast, the drive goes into OU fault mode.<br>**CAUTION:**<br>**In Auto ramp + and Fixed ramp + modes, the motor must be able to tolerate additional losses relating to the increase in voltage at its terminals.**<br>(Address menu in manual reference 3997: 2.04) |
| **56** | NO. OF AUTOMATIC DRIVE RESETS | R-W | 2 | None; 1; 2; 3; 4; 5<br><br>**0:** Faults are not cleared automatically. A command must be given.<br>**1 to 5:** Results in the programmed number of automatic fault reset attempts.<br>When the counter reaches the permitted number of reset attempts, the drive locks. It is only possible to reset this last fault using a command.<br>If there are no faults, the counter is decremented by one value every 5 minutes.<br>(Address menu in manual reference 3997: 10.34) |
| **57** | AUTO-RESET TIME DELAY | R-W | 1.0 s | 0 to 25 s<br><br>This parameter defines the time between the drive switching to fault mode and the automatic reset (subject to a minimum stop time for faults connected with overcurrents).<br>(Address menu in manual reference 3997: 10.35) |

en

| Parameter | Name | Type | Factory setting | Adjustment range/Description |
|---|---|---|---|---|
| **58** | STOPPING MODE | R-W | Ramp | Freewheel; Ramp ; Ramp + DC; Zero speed DC; Timed DC<br><br>**Freewheel:** The power bridge is deactivated as soon as the stop command is given. The machine stopping time depends on its inertia.<br>The drive cannot receive another run command for 2 s, the motor demagnetisation time.<br> 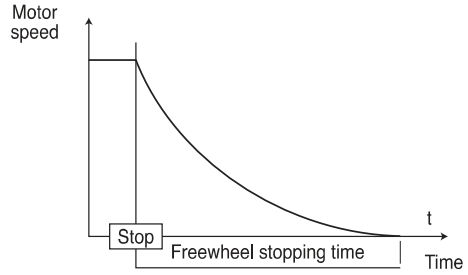 <br>**Ramp:** The drive decelerates the motor according to the deceleration mode chosen in parameter 55.<br> 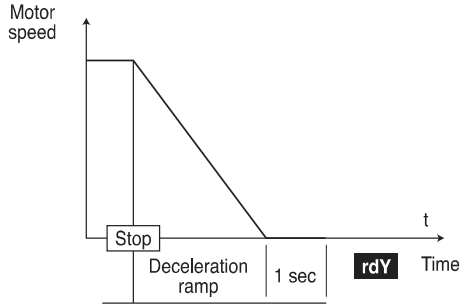 <br>**Ramp + DC:** The drive decelerates the motor according to the deceleration mode chosen in parameter **55**.<br>When zero frequency is reached, the drive injects DC current for 1 second.<br> 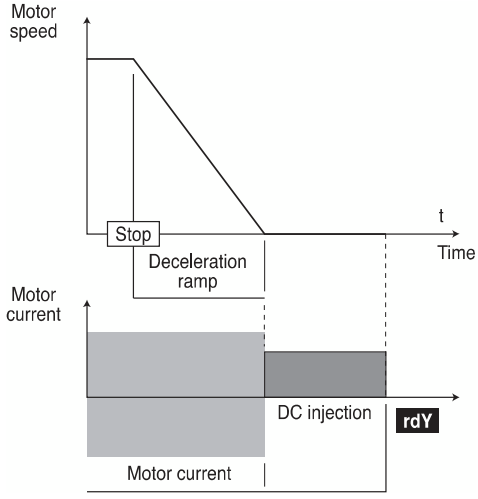 <br>**Zero speed DC:** The drive decelerates the motor by setting a low frequency current resulting in almost zero speed, which the drive detects automatically. |

<table>
<tr><th>Parameter</th><th>Name</th><th>Type</th><th>Factory setting</th><th>Adjustment range/Description</th></tr>
<tr><td>58<br>(continued)</td><td></td><td></td><td></td><td>The drive then injects DC current for 1 second.<br> 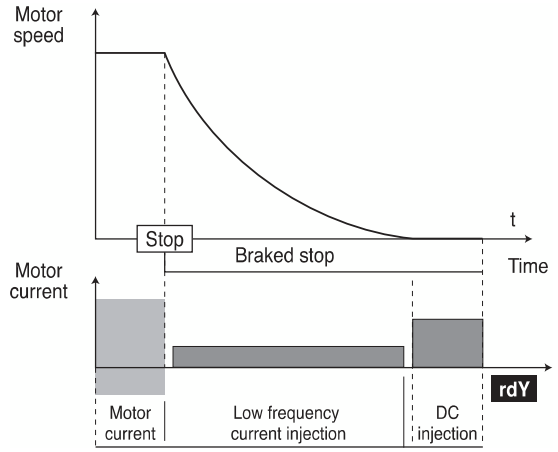

Delayed DC: The drive decelerates the motor by imposing DC current for 1 second.<br> 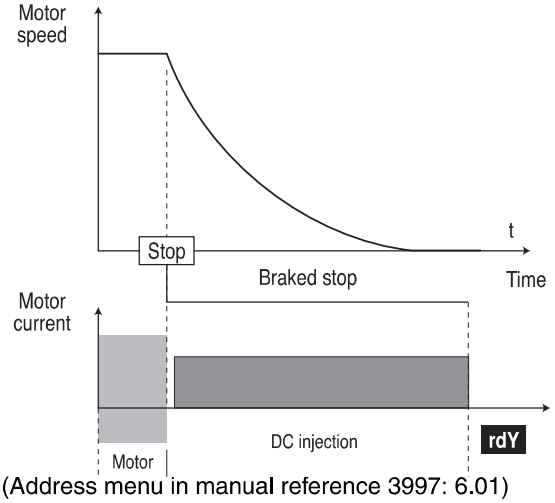

(Address menu in manual reference 3997: 6.01)</td></tr>
<tr><td>59</td><td>CATCH A SPINNING MOTOR</td><td>R-W</td><td>Disabled</td><td>Disabled; 2 directions; Clockwise; Anti-clockwise<br><br>If this parameter is enabled by 59 = 2 directions, Clockwise or Anti-clockwise, when there is a run command or after a mains supply break, the drive executes a procedure to calculate the motor frequency and direction of rotation. It will automatically recalibrate the output frequency to the measured value and re-accelerate the motor up to the reference frequency.<br>• If the load is stationary at the time of the run command or when the mains supply returns, this operation may cause the machine to rotate in both directions before the motor accelerates.<br>• Before enabling this function, check that there is no danger to equipment and personnel.<br>(Address menu in manual reference 3997: 6.09)</td></tr>
</table>

Parameters specific to the VMA 33/34.

# VARMECA 30
## Variable speed motors and geared motors
COMMISSIONING USING THE LCD KEYPAD MICRO CONSOLE



| Parameter | Name | Type | Factory setting | Adjustment range/Description |
|---|---|---|---|---|
| **60** | SWITCHING FREQUENCY | R-W | 4.5 kHz (VMA 33/34)<br>4 kHz (VMA 31/32) | VMA 33/34: 3kHz; 4.5kHz; 5.5kHz; 6kHz; 9kHz; 11kHz<br>VMA 31/32: 3kHz; 4kHz; 5kHz; 6kHz, 8kHz, 10kHz, 12kHz, 16kHz<br>Sets the VARMECA switching frequency.<br>**CAUTION:**<br>**A high switching frequency reduces the magnetic noise. However it increases the motor temperature rise and the level of radio-frequency interference emission, and reduces the starting torque.**<br>**If the temperature becomes too high, the drive can reduce the switching frequency selected by the user.**<br>(Address menu in manual reference 3997: 5.18) |
| **61** | MOTOR RATED FREQUENCY | R-W | 50.0 Hz | 0 to 400 Hz<br>This is the point at which motor operation changes from constant torque to constant power.<br>In standard operation, it is the frequency indicated on the motor nameplate.<br>(Address menu in manual reference 3997: 5.06) |
| **62** | NUMBER OF MOTOR POLES | R-W | Automatic | Automatic; 2 poles; 4 poles; 6 poles; 8 poles<br>When this parameter is set to Automatic, the drive automatically calculates the number of poles according to the rated speed (**07**) and the rated frequency (**61**).<br>(Address menu in manual reference 3997: 5.11) |
| 63 | ENABLE AUTOCALIBRATION | R-W | No | No ; No rotation; Rotation<br>**• Measurements taken when 63 = Rotation must be performed with the motor uncoupled as the drive drives the motor at 2/3 of its rated speed.**<br>**Check that this operation does not present any safety risks, and ensure that the motor is stopped before the autocalibration procedure.**<br>**After modifying the motor parameters, it is advisable to repeat autocalibration.**<br>**No:** No autocalibration<br>**No rotation:** Measurement of motor characteristics when stopped. The stator resistance and voltage offset are measured.<br>**Procedure:**<br>– Check that the motor parameters have been set and that the motor is stopped<br>– Unlock the drive<br>– Give a run command<br>– Lock the drive and remove the run command<br>The motor is then ready to operate normally.<br>Parameter **63** returns to No as soon as autocalibration has been completed.<br>**CAUTION:**<br>**This autocalibration is performed automatically even though 63 = No, in the following cases:**<br>**– Initial commissioning of the drive**<br>**– Return to factory settings, after the drive has been unlocked and a run command given**<br>**Rotation:** Measurement of motor characteristics with rotation. The stator resistance and the voltage offset are stored, and the magnetising current and the leakage inductance are used to calculate the power factor **09**. This mode is used to obtain optimal performance.<br>**Procedure:**<br>– Check that the motor parameters have been set and that the motor is stopped |

Parameters specific to the VMA 33/34.

| Parameter | Name | Type | Factory setting | Adjustment range/Description |
|---|---|---|---|---|
| **63** (continued) | | | | – Unlock the drive<br>– Give a run command. The motor accelerates up to 2/3 of rated speed, then stops in freewheel mode. During autocalibration, lock the drive and remove the run command<br>The motor is then ready to operate normally.<br>Parameter **63** returns to No as soon as autocalibration has been completed.<br>(Address menu in manual reference 3997: 5.12) |
| **64** | COPY PARAMETERS | R-W | No | No; Key to Drive; Drive to key; Auto key mem.<br><br>Lock the drive before each modification<br><br>**Note:** This parameter is not active with software versions ≤ V2.0.<br><br>**No:** No action.<br><br>**Key to drive:** Inactive in VARMECA VMA 31/32 as the console and the key use the same RJ45 socket.<br><br>**Drive to Key:** When this parameter is stored as Drive to Key and the drive output is not active, replace the console cable connector in the RJ45 socket with that of the key. Pressing the key button causes the parameters contained in the drive to be stored in the copy key. At the end of the transfer, the parameter returns to No, once the console has been reconnected. If confirmation is not received within 10 seconds of the first press, the procedure is cancelled.<br><br>**Auto key mem:** Only in VMA 33/34.<br>Used for automatic storing in the key when the parameters are modified using the PADVMA 33/34 option.<br><br>**CAUTION:**<br>**The copy key contains parameters relating to the drive rating. If the parameters are copied into a drive with a different rating, the parameters relating to the drive and the motor characteristics will not be copied and the LED will not come on with a fixed light at the end of the transfer.**<br>(Address menu in manual reference 3997: 11.42). |
| **65** | RETURN TO FACTORY SETTINGS | R-W | No | No; Yes<br><br>**CAUTION:**<br>**Lock the drive before changing 65.**<br>**No:** No return to factory settings procedure is performed.<br>**Yes:** Reconfigures the drive to factory settings.<br>**Parameters relating to min. speed, max. speed, motor parameters, the motor control mode and the motor rating are not affected by the return to factory settings.**<br>(Address menu in manual reference 3997: 11.43) |

Parameters specific to the VMA 33/34.

# VARMECA 30
## Variable speed motors and geared motors
COMMISSIONING USING THE LCD KEYPAD MICRO CONSOLE



**Security code**:

| Parameter | Name | Type | Factory setting | Adjustment range |
|---|---|---|---|---|
| **66** | CUSTOMER SECURITY CODE | R-W | 0 | 0 to 9999<br>Security code for the PADVMA30 option<br><br>If this parameter is other than 0, and **10** is set to Read only, no parameter modification can take place. To modify a parameter, the user must enter the code equivalent to the value of **66**.<br>In read mode, this parameter is always at 0.<br>(Address menu in manual reference 3997: 11.30) |

**Parameters associated with the drive operating status**

| Parameter | Name | Type | Factory setting | Adjustment range |
|---|---|---|---|---|
| **67** | DISPLAY MODE | R-W | Speed | PADVMA 30 display configuration<br>Speed; Load; Speed/Load; User; Speed/User; Load/User<br><br>**Speed:** On power-up, the speed is displayed. The unit depends on the setting of **69** (frequency in Hz, speed in $min^{-1}$ or a unit defined by the user).<br>**Load:** On power-up, the load is displayed. The unit displayed depends on the setting of **68** (motor load as a % or output current in A).<br>**Speed/Load:** Displays the speed and the load, or the current, alternately.<br>**User:** On power-up, the speed selected by parameter 11.49 is displayed.<br>**Speed/User:** Displays alternately the speed and the parameter selected in 11.49.<br>**Load/User:** Displays alternately the load and the parameter selected in 11.49.<br>(Address menu in manual reference 3997: 11.22) |
| **68** | SELECT LOAD DISPLAY | R-W | As % of rated curr. | As % of rated curr; In Amps<br><br>This parameter is used to display the load or the total current.<br>(Address menu in manual reference 3997: 04.21) |
| **69** | SPEED DISPLAY UNIT | R-W | $min^{-1}$ | Hertz, $min^{-1}$ , Customised<br><br>This parameter is used to select the unit in which the speed is displayed.<br>**Customised::** Customer unit defined using a coefficient determined in parameter **70** as follows, Customised = **79** (motor speed in $min^{-1}$) x **70**.<br>(Address menu in manual reference 3997: 05.34) |
| **70** | CUSTOMER UNIT SCALE | R-W | 1.000 | 0 to 9,999<br>This is a multiplication coefficient applied to the motor speed for expressing the speed in a unit defined by the user (see **69**).<br>Example: To obtain a reading in m/min for an application where the product is moving 200 mm for each motor revolution → **70** = 0.2.<br>(Address menu in manual reference 3997: 11.43) |
| **71** | LAST FAULT | RO | – | Displays the last 5 drive faults.<br>**71**: indicates the most recent fault, and **75** the oldest fault. See the table in section 5 for the list of faults.<br>(Address menu in manual reference 3997: 10.20, 10.21, 10.22, 10.23, 10.24) |
| **72** | FAULT - 2 | RO | – | |

Parameters specific to the VMA 33/34.

| Parameter | Name | Type | Factory setting | Adjustment range |
|---|---|---|---|---|
| **73** | PARAMETER 47 ASSIGNMENT | R-W | 0 | Used to assign a parameter in parameters **47**, **49**, **50** |
| **74** | PARAMETER 49 ASSIGNMENT | R-W | 0 | |
| **75** | PARAMETER 50 ASSIGNMENT | R-W | 0 | |
| **73** | ANALOGUE/DIGITAL INPUT 01 | RO | 0% | 0 to 100.00%<br>Read value of the ADI1, ADI2, ADI3 input<br>(Address menu in manual reference 3997: 07.01, 07.02, 07.03) |
| **74** | ANALOGUE/DIGITAL INPUT 02 | RO | 0% | |
| **75** | ANALOGUE/DIGITAL INPUT 03 | RO | 0% | |
| **76** | REFERENCE BEFORE OFFSET | RO | 300 | ± 32000 $min^{-1}$<br>Indicates the value of the selected reference before offset.<br>(Address menu in manual reference 3997: 01.60) |
| **77** | IGBT JUNCTION TEMP. | RO | - | 0 to 120 °C<br>Indicates the measured temperature of the junction of the IGBTs. The drives switches to fault mode when the temperature reaches 110 °C, and can be reset when the temperature falls below 100 °C.<br>(Address menu in manual reference 3997: 07.34) |
| **78** | TOTAL MOTOR CURRENT | RO | – | VARMECA 0 to Imax (A)<br>Reading of the rms current in each drive output phase.<br>This is the result of the vectorial sum of the magnetising current and the active current.<br>(Address menu in manual reference 3997: 04.01) |
| **79** | MOTOR SPEED | RO | | ± 2 × **02** $min^{-1}$<br>Indicates the calculated motor speed.<br>(Address menu in manual reference 3997: 05.04) |
| **80** | DC BUS VOLTAGE | RO | – | 0 to 420 V (TL); 0 to 830 V (T)<br>Indicates the DC bus voltage measurement.<br>(Address menu in manual reference 3997: 05.05) |

Parameters specific to the VMA 33/34.

## 2.6 - Parameter-setting mode via "ADVANCED" menu

All functions that can be accessed are described in document 3997).

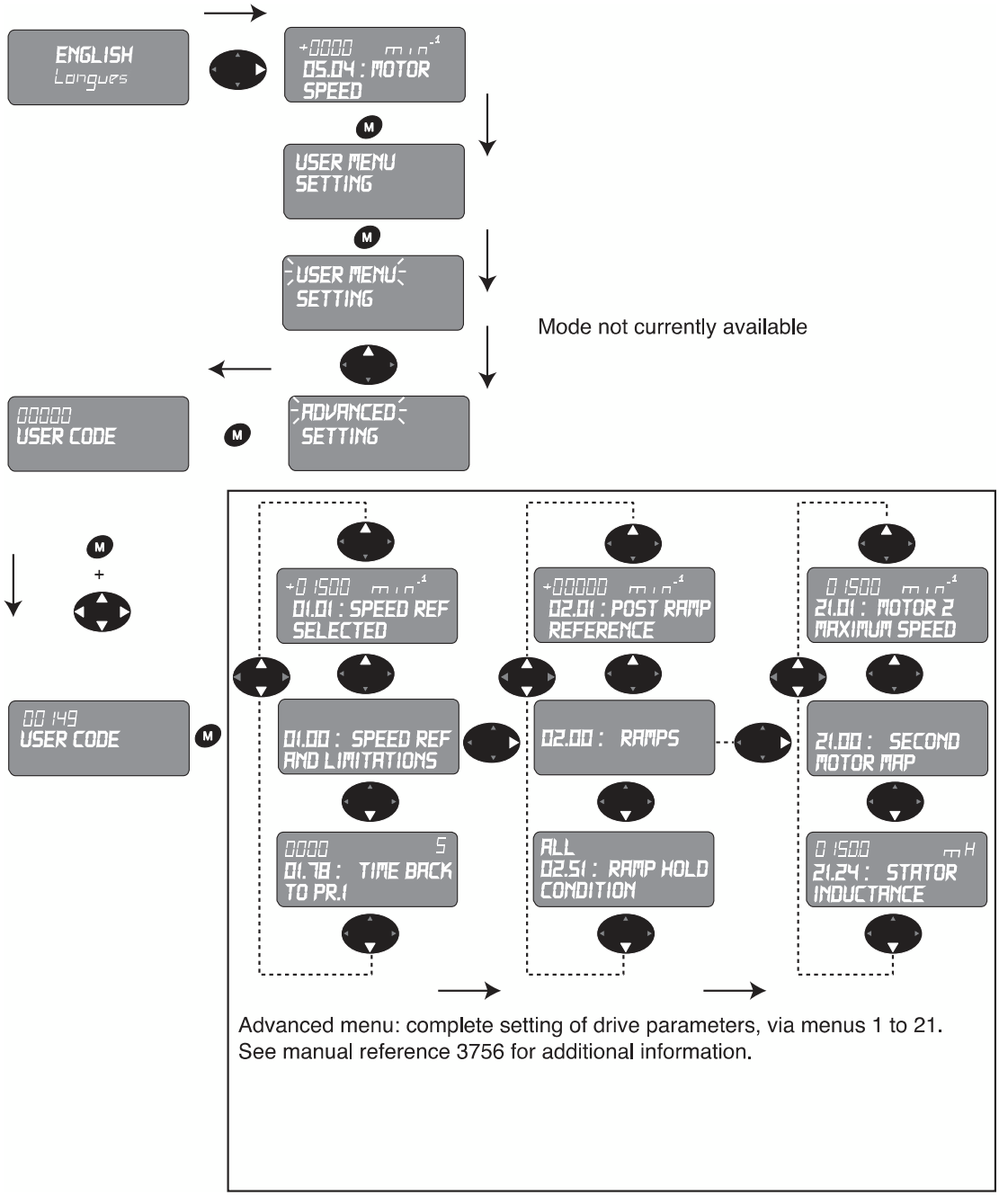

# 3 - SWITCHING TO PROTECTIVE MODE – DIAGNOSTICS

**• The user must not attempt to repair the drive, or perform any diagnostics other than those listed in this section. If the drive malfunctions, it should be returned to LEROY-SOMER via your usual contact.**

The LCD KEYPAD or PAD VMA options give a certain amount of information which simplifies the diagnostic process.
This information is broken down into 2 categories:

– Information concerning operation
– Fault tripping

If the drive switches to protection mode, the drive output bridge is inactive, and the drive no longer controls the motor. The display indicates "triP" and the fault code alternately.
All the faults indicated by the display unit are listed in the following table in alphabetical order.

| PAD VMA30 Display | LCD KEYPAD display | Cause | Solution |
|---|---|---|---|
| cL1 | 4 mA ADI1 | Loss of the current reference on analogue input ADI1 | • Check the connections of analogue input ADI1, ADI2 or ADI03<br>• Check that the reference is > 3 mA |
| cL2 | 4 mA ADI2 | Loss of the current reference on analogue input ADI2 | |
| cL3 | 4 mA ADIO3 | Loss of the current reference on analogue input ADIO3 | |
| EEF | | The drive rating does not correspond to XPress Key | |
| | EEPROM | EEPROM fault | • Perform a return to factory settings procedure (see **65**) |
| EnC1 | Chann. U encod. | Loss of channel U | • Check the connection and supply voltage of the encoder<br>• Check the speed feedback<br>• Replace the encoder |
| EnC2 | Chann. V encod. | Loss of channel V | • Check the encoder voltage and connections |
| EnC3 | Chann. W encod. | Loss of channel W | • Check the encoder voltage and connections |
| Fbus | Bus loss | Disconnection of the fieldbus during operation | • Check the connections<br>• Check the fixing of the fieldbus option |
| It.AC | $I^2t$ motor | Motor overload $I^2 \times t$ | • Check that the motor is not overloaded<br>• Adjust the rated speed (▣)<br>• Check that the motor rated current is set correctly (**06**)<br>• Speed feedback: Check the coupling, and check that the signal is not subject to interference<br>• Check the number of motor poles in **62** |
| It.br | Brake resist. | Braking resistor overload $I^2 \times t$ | • Read the battery value in **10.39**<br>• Increase the resistor ohmic value<br>• Check that **10.30** and **10.31** are set correctly (braking cycle too long)<br>• Check the resistor wiring<br>• Check the integrated transistor |
| Oht1 | IGBT temp. | IGBT overheating (sensor) | • Reduce the motor load, the cycle, the switching frequency, and the acceleration and deceleration ramps |
| Oht2 | RF int. temp. | Internal resistor overheating (sensor) | • Reduce the switching frequency<br>• Reduce the cycle and the motor load |
| OI.AC | Drive output curr. | Overcurrent at drive output | • Check the motor insulation and connection<br>• Increase the acceleration and deceleration ramps<br>• Perform another calibration<br>• Check the wiring, coupling and the speed feedback signals (▣)<br>• Reduce the speed loop gains 29 and 30 (▣)<br>• Reduce the current loop gains 31 and 32 |
| OI.br | Brake IGBT curr. | Braking IGBT overcurrent | • Check the resistor insulation<br>• Correct the short-circuit at the resistor output<br>• Set a higher resistor ohmic value |
| OLd1 | +24 V Ovrld. | Overload on + 24V source or digital output | • Check the total current consumption |

: Faults specific to the VMA 33/34

# VARMECA 30

## Variable speed motors and geared motors

SWITCHING TO PROTECTIVE MODE – DIAGNOSTICS



| PAD VMA30 display | LCD KEYPAD display | Cause | Solution |
|---|---|---|---|
| OSP | Overspeed | Overspeed | • The speed is higher than 1.2 times the value of **02**<br>• Check that the load is not driving<br>• Check that the overspeed threshold has been set correctly<br>• Adjust the speed loop gains<br>• Set a longer deceleration time |
| OU | DC bus voltage | DC bus overvoltage | • Provide a braking resistor (optional). If a resistor is already connected, reduce its value (within the permitted limit)<br>• Check that the mains supply is not disturbed<br>• Check the motor insulation<br>• Set a longer deceleration time in **04**<br>• Check the deceleration mode |
| Ph | Loss of phase | No motor current with brake enabled | • Reduce parameter **38** |
| rS | Stator resis. | Stator resistance measurement fault | • Adapt the drive power to that of the motor<br>• Check the connection of the motor cables |
| SCL | COM loss | Serial link fault | • Check that the serial link cable is not damaged or incorrectly connected<br>• Check 1163 = 0 |
| Secd | Sec. disable inp. | Secure disable input fault | • Give a stop command before unlocking the drive |
| th | Motor sensor | Motor sensor trip | • Check the motor load<br>• Reduce the overload level<br>• Check the motor cooling and the ambient temperature<br>• Check the wiring of terminal ADI2 on the control terminal block |
| tr 01 | User 1 | User fault 1 via logic input | • Check the wiring of terminal DI01 / underpresssure fault in config 05 = VENT. PUMPS |
| tr 02 | User 2 | User fault 2 high internal temperature | • Check the cooling of the VMA 30 |
| tr 03 | User 3 | User fault 3 via logic input | |
| tr 04 | User 4 | User fault 4 via logic input | |
| tr 05 | User 5 | User fault 5 via serial link | |
| tr 06 | User 6 | User fault 6 via serial link | |
| tr 07 | User 7 | User fault 7 via serial link | |
| tr 08 | User 8 | User fault 8 via serial link | |
| tr 09 | User 9 | User fault 9 via serial link | |
| tr 10 | User 10 | User fault 10 via serial link | |
| enC2 | Encoder rot. | The measured position does not vary (the encoder is incorrectly connected or not supplied with power or the shaft is not turning) | |
| rot | Invers. A/B | The a, b, a\, b\ signals are the wrong way round | • Check the encoder wiring |
| tun 3 | Invers. UVW | The u, v, w switching signals are the wrong way round | • Check the encoder wiring |
| tun 4 | Cal U encod. | Some signals are present, but U is missing | • Check the encoder wiring |
| tun 5 | Cal V encod. | Some signals are present, but V is missing | |
| tun 6 | Cal W encod. | Some signals are present, but W is missing | |
| tun 7 | No. of poles | The number of pairs of poles set is incorrect (the revolutions measured mechanically with a and b, and electrically with u, v and w, are inconsistent, given the number of pairs of poles entered) | • Check parameter **62** |
| tun E | Autocalibr. | Autocalibration error | • Drive set to fault mode during the autocalibration phase<br>• The Stop key has been pressed<br>• The SDI contact has been opened during the autocalibration phase |
| UU | BUS Underv. | DC bus undervoltage | • Check the mains supply |

: Faults specific to the VMA 33/34

# 4 - APPENDIX

**- Detailed parameter settings for preset configurations: page 55 to 64.**

**- Sequential brake control: page 65.**

# VARMECA 30
## Variable speed motors and geared motors
APPENDIX



**05 = STANDARD**

| Parameter | Parameter definition | Factory setting | |
|---|---|---|---|
| **01.14** | Selection of references | ana. input 1 | |
| **06.04** | Start/stop logic select | Latched Run/ | |
| **06.43** | Origin of commands | via terminals | |
| **07.10** | ADI1 input destination | 01.36 | |
| **07.11** | ADI2 mode | PTC sensor | |
| **07.14** | ADI2 input destination | 00.00 | |
| **07.15** | ADIO3 mode | 0-10V output | |
| **07.16** | ADIO3 input or output scaling | 1.0 | |
| **07.17** | ADIO3 input or output invert | no | |
| **07.18** | ADIO3 input destination/output source | 10.90 | |
| **08.10** | Drive enable mode select | lock | |
| **08.11** | Digital input or output DIO1 invert | yes | |
| **08.12** | Digital input DI2 invert | no | |
| **08.13** | Digital input DI3 invert | no | |
| **08.14** | Digital input DI4 invert | yes | |
| **08.21** | DIO1 input destination | 10.61 | |
| **08.22** | DI2 input destination | 06.30 | |
| **08.23** | DI3 input destination | 06.32 | |
| **08.24** | DI4 input destination | 09.30 | |
| **08.31** | Selection of terminal DIO1 as input or output | input | |
| **09.33** | Decimal output destination | 07.06 | |
| **09.34** | Binary sum offset | 4 | VMA 33/34 |

**05 = STANDARD + JOG**

| Parameter | Parameter definition | Factory setting | |
|---|---|---|---|
| **01.14** | Selection of references | ana. input 1 | |
| **06.04** | Start/stop logic select | Jog Run/Stop | |
| **06.43** | Origin of commands | via terminals | |
| **07.10** | ADI1 input destination | 01.36 | |
| **07.11** | ADI2 mode | PTC sensor | |
| **07.14** | ADI2 input destination | 00.00 | |
| **07.15** | ADIO3 mode | 0-10V output | |
| **07.16** | ADIO3 input or output scaling | 1.0 | |
| **07.17** | ADIO3 input or output invert | no | |
| **07.18** | ADIO3 input destination/output source | 10.90 | |
| **08.10** | Drive enable mode select | lock | |
| **08.11** | Digital input or output DIO1 invert | no | |
| **08.12** | Digital input DI2 invert | no | |
| **08.13** | Digital input DI3 invert | no | |
| **08.14** | Digital input DI4 invert | yes | |
| **08.21** | DIO1 input destination | 06.32 | |
| **08.22** | DI2 input destination | 06.30 | |
| **08.23** | DI3 input destination | 06.39 | |
| **08.24** | DI4 input destination | 09.30 | |
| **08.31** | Selection of terminal DIO1 as input or output | input | |
| **09.33** | Decimal output destination | 07.06 | |
| **09.34** | Binary sum offset | 4 | VMA 33/34 |

# VARMECA 30
## Variable speed motors and geared motors
APPENDIX

**05 = STANDARD + PID**

| Parameter | Parameter definition | Factory setting | |
|---|---|---|---|
| **01.14** | Selection of references | ana. input 1 | |
| **06.04** | Start/stop logic select | Latched Run/ | |
| **06.43** | Origin of commands | via terminals | |
| **07.06** | ADI1 mode | 0-10V | |
| **07.09** | ADI1 input invert | no | |
| **07.10** | ADI1 input destination | 01.27 | |
| **07.11** | ADI2 mode | 0-10V | |
| **07.14** | ADI2 input destination | 01.28 | |
| **07.15** | ADIO3 mode | 0-10V output | |
| **07.16** | ADIO3 input or output scaling | 1.0 | |
| **07.17** | ADIO3 input or output invert | no | |
| **07.18** | ADIO3 input destination/output source | 10.90 | |
| **08.10** | Drive enable mode select | lock | |
| **08.11** | Digital input or output DIO1 invert | yes | |
| **08.12** | Digital input DI2 invert | no | |
| **08.13** | Digital input DI3 invert | no | |
| **08.14** | Digital input DI4 invert | no | |
| **08.21** | DIO1 input destination | 10.61 | |
| **08.22** | DI2 input destination | 06.30 | |
| **08.23** | DI3 input destination | 06.32 | |
| **08.24** | DI4 input destination | 14.08 | |
| **08.31** | Selection of terminal DIO1 as input or output | input | |
| **14.02** | Main reference source | 01.27 | |
| **14.03** | PID reference source | 01.27 | |
| **14.04** | PID feedback source | 01.28 | |
| **14.16** | PID destination | 01.36 | VMA 33/34 |

**05 = 3VP + 1ANALOG.**

| Parameter | Parameter definition | Factory setting | |
|---|---|---|---|
| **01.14** | Selection of references | ana. input 1 | |
| **01.15** | Selection of preset frequencies | via terminals | |
| **06.04** | Start/stop logic select | Latched Run/ | |
| **06.43** | Origin of commands | via terminals | |
| **07.06** | ADI1 mode | 0-10V | |
| **07.08** | ADI1 input scaling | 1.0 | |
| **07.09** | ADI1 input invert | no | |
| **07.10** | ADI1 input destination | 01.36 | |
| **07.11** | ADI2 mode | PTC sensor | |
| **07.14** | ADI2 input destination | 00.00 | |
| **07.15** | ADIO3 mode | 0-10V output | |
| **07.16** | ADIO3 input or output scaling | 1.0 | |
| **07.17** | ADIO3 input or output invert | no | |
| **07.18** | ADIO3 input destination/output source | 10.90 | |
| **08.10** | Drive enable mode select | lock | |
| **08.11** | Digital input or output DIO1 invert | no | |
| **08.12** | Digital input DI2 invert | no | |
| **08.13** | Digital input DI3 invert | no | |
| **08.14** | Digital input DI4 invert | no | |
| **08.21** | DIO1 input destination | 01.46 | |
| **08.22** | DI2 input destination | 06.30 | |
| **08.23** | DI3 input destination | 06.32 | |
| **08.24** | DI4 input destination | 01.45 | |
| **08.31** | Selection of terminal DIO1 as input or output | input | VMA 33/34 |

# VARMECA 30
## Variable speed motors and geared motors
APPENDIX



**05 = 3VP ANA ESFR (VMA 31/32 only)**

| Parameter | Parameter definition | Factory setting |
|---|---|---|
| **01.14** | Selection of references | ana. input 1 |
| **01.15** | Selection of preset frequencies | via terminals |
| **06.04** | Start/stop logic select | Latched Run/ |
| **06.43** | Origin of commands | via terminals |
| **07.06** | ADI1 mode | 0-10V |
| **07.08** | ADI1 input scaling | 1.0 |
| **07.09** | ADI1 input invert | no |
| **07.10** | ADI1 input destination | 01.36 |
| **07.11** | ADI2 mode | Digital input |
| **07.14** | ADI2 input destination | 12.51 |
| **07.15** | ADIO3 mode | Digital input |
| **07.16** | ADIO3 input or output scaling | 1.0 |
| **07.17** | ADIO3 input or output invert | no |
| **07.18** | ADIO3 input destination/output source | 01.46 |
| **08.11** | Digital input or output DI01 invert | no |
| **08.12** | Digital input DI2 invert | no |
| **08.13** | Digital input DI3 invert | no |
| **08.14** | Digital input DI4 invert | no |
| **08.21** | DIO1 input destination | 12.40 |
| **08.22** | DI2 input destination | 06.30 |
| **08.23** | DI3 input destination | 06.32 |
| **08.24** | DI4 input destination | 01.45 |
| **08.31** | Selection of terminal DIO1 as input or output | output |

**05 = 8VP**

| Parameter | Parameter definition | Factory setting |
|---|---|---|
| **01.14** | Selection of references | preset ref. |
| **01.15** | Selection of preset frequencies | via terminals |
| **06.04** | Start/stop logic select | Latched Run/ |
| **06.43** | Origin of commands | via terminals |
| **07.06** | ADI1 mode | Digital input |
| **07.08** | ADI1 input scaling | 1.0 |
| **07.09** | ADI1 input invert | no |
| **07.10** | ADI1 input destination | 01.46 |
| **07.11** | ADI2 mode | PTC sensor |
| **07.14** | ADI2 input destination | 00.00 |
| **07.15** | ADIO3 mode | 0-10V output |
| **07.16** | ADIO3 input or output scaling | 1.0 |
| **07.17** | ADIO3 input or output invert | no |
| **07.18** | ADIO3 input destination/output source | 10.90 |
| **08.10** | Drive enable mode select | lock |
| **08.11** | Digital input or output DI01 invert | no |
| **08.12** | Digital input DI2 invert | no |
| **08.13** | Digital input DI3 invert | no |
| **08.14** | Digital input DI4 invert | no |
| **08.21** | DIO1 input destination | 01.47 |
| **08.22** | DI2 input destination | 06.30 |
| **08.23** | DI3 input destination | 06.32 |
| **08.24** | DI4 input destination | 01.45 |
| **08.31** | Selection of terminal DIO1 as input or output | input |

VMA 33/34

# VARMECA 30
## Variable speed motors and geared motors
APPENDIX

**05 = LOCAL/REM**

| Parameter | Parameter definition | Factory setting |
|---|---|---|
| **01.04** | Reference offset | 0 |
| **01.14** | Selection of references | ana. input 1 |
| **06.04** | Start/stop logic select | Latched Run/ |
| **06.43** | Origin of commands | via terminals |
| **07.06** | ADI1 mode | 0-10V |
| **07.08** | ADI1 input scaling | 1.0 |
| **07.09** | ADI1 input invert | yes |
| **07.10** | ADI1 input destination | 01.38 |
| **07.11** | ADI2 mode | 0-10V |
| **07.12** | ADI2 input scaling | 1.0 |
| **07.13** | ADI2 input invert | no |
| **07.14** | ADI2 input destination | 01.36 |
| **07.15** | ADIO3 mode | 0-10V output |
| **07.16** | ADIO3 input or output scaling | 1.0 |
| **07.17** | ADIO3 input or output invert | no |
| **07.18** | ADIO3 input destination/output source | 10.90 |
| **08.10** | Drive enable mode select | lock |
| **08.11** | Digital input or output DIO1 invert | no |
| **08.12** | Digital input DI2 invert | no |
| **08.13** | Digital input DI3 invert | no |
| **08.14** | Digital input DI4 invert | yes |
| **08.21** | DIO1 input destination | 01.09 |
| **08.22** | DI2 input destination | 06.30 |
| **08.23** | DI3 input destination | 06.32 |
| **08.24** | DI4 input destination | 09.30 |
| **08.31** | Selection of terminal DIO1 as input or output | input |
| **09.33** | Decimal output destination | 07.11 |
| **09.34** | Binary sum offset | 4 |

VMA 33/34

# VARMECA 30
## Variable speed motors and geared motors
APPENDIX



**05 = 2VP PROP.B**

| Parameter | Parameter definition | Factory setting |
|---|---|---|
| **01.04** | Reference offset | 0 |
| **01.14** | Selection of references | preset ref. |
| **01.15** | Selection of preset speeds | via terminals |
| **06.04** | Start/stop logic select | Latched Run/ |
| **06.43** | Origin of commands | via terminals |
| **07.06** | ADI1 mode | 0-10V |
| **07.08** | ADI1 input scaling | 1.0 |
| **07.09** | ADI1 input invert | yes |
| **07.10** | ADI1 input destination | 01.38 |
| **07.11** | ADI2 mode | Digital input |
| **07.12** | ADI2 input scaling | 1.0 |
| **07.13** | ADI2 input invert | no |
| **07.14** | ADI2 input destination | 01.45 |
| **07.15** | ADIO3 mode | 0-10V output |
| **07.16** | ADIO3 input or output scaling | 1.0 |
| **07.17** | ADIO3 input or output invert | no |
| **07.18** | ADIO3 input destination/output source | 10.90 |
| **08.10** | Drive enable mode select | lock |
| **08.11** | Digital input or output DIO1 invert | yes |
| **08.12** | Digital input DI2 invert | no |
| **08.13** | Digital input DI3 invert | no |
| **08.14** | Digital input DI4 invert | yes |
| **08.21** | DIO1 input destination | 01.09 |
| **08.22** | DI2 input destination | 06.30 |
| **08.23** | DI3 input destination | 06.32 |
| **08.24** | DI4 input destination | 09.30 |
| **08.31** | Selection of terminal DIO1 as input or output | input |
| **09.33** | Decimal output destination | 07.06 |
| **09.34** | Binary sum offset | 4 |

VMA 33/34

# VARMECA 30
## Variable speed motors and geared motors
APPENDIX

**05 = PUMPS VENT**

| Parameter | Parameter definition | Factory setting |
|---|---|---|
| **01.14** | Selection of references | via terminals |
| **01.24** | RP 4 | 2 |
| **01.26** | RP 6 | 5 |
| **1.27** | RP 7 | 1 |
| **02.04** | Deceleration mode | Fix ramp |
| **02.11** | Acceleration 1 | 0.1 \| 0.5 |
| **02.20** | Selection of deceleration ramp | Decel. N°5 |
| **02.21** | Deceleration ramp 1 | 5 |
| **02.25** | Deceleration 5 | 0.1 \| 0.5 |
| **05.12** | Autotune | No |
| **07.08** | ADI1 input scaling | 0.99 |
| **07.10** | ADI1 input destination | 1224 |
| **07.11** | ADI2 mode | 4-20mA detect |
| **07.14** | ADI2 input destination | 124 |
| **07.62** | Potentiometer input scaling | 0.9 |
| **07.64** | Potentiometer input destination | 1264 |
| **07.68** | Source potentiometer | 701 |
| **08.11** | Digital input or output DI01 invert | No |
| **08.14** | Digital input DI4 invert | No |
| **08.21** | DIO1 input destination | 931 |
| **08.22** | DI2 input destination | 0 |
| **08.23** | DI3 input destination | 0 |
| **08.24** | DI4 input destination | 1408 |
| **09.04** | No. 1 AND function source 1 | 630 |
| **09.06** | No. 1 AND function source 2 | 1630 |
| **09.14** | No. 2 AND function source 1 | 1201 |
| **09.16** | No. 2 AND function source 2 | 1002 |
| **09.34** | Binary sum offset | 2 |
| **09.64** | No. 3 AND function source 1 | 1202 |
| **09.66** | No. 3 AND function source 2 | 1004 |
| **09.70** | No. 4 AND function destination | 630 |
| **09.74** | No. 4 AND function source 1 | 1641 |
| **09.76** | No. 4 AND function source 2 | 802 |
| **10.35** | Automatic fault erasure timer | 2 |
| **10.70** | Automatic under voltage reset | Yes |
| **11.01** | Determination of 46 | 622 |
| **11.02** | Determination of 47 | 623 |
| **11.03** | Determination of 48 | 762 |
| **11.04** | Determination of 49 | 1020 |
| **11.05** | Determination of 50 | 1021 |
| **11.06** | Determination of 51 | 1022 |
| **11.07** | Determination of 52 | 1023 |
| **11.08** | Determination of 53 | 1024 |
| **11.09** | Determination of 54 | 1025 |
| **11.10** | Determination of 55 | 1026 |
| **11.11** | Determination of 56 | 1027 |
| **11.12** | Determination of 57 | 1402 |
| **11.13** | Determination of 58 | 1403 |
| **12.03** | Threshold detector 1 source | 124 |
| **12.04** | Threshold detector 1 threshold | 10 |
| **12.05** | Threshold detector 1 hysteresis | 2 |
| **12.06** | Threshold detector 1 invert | Yes |
| **12.23** | Threshold detector 2 source | 702 |
| **12.25** | Threshold detector 2 hysteresis | 0.5 |
| **12.27** | Threshold detector 2 destination | 0 |
| **12.28** | Variable selector 2 source 1 | 126 |
| **12.29** | Variable selector 2 source 2 | 127 |
| **12.31** | Destination sortie bloc 2 | 220 |

VMA 33/34

# VARMECA 30
## Variable speed motors and geared motors
APPENDIX



**05 = PUMPS (continued)**

| Parameter | Parameter definition | Factory setting | |
|---|---|---|---|
| **12.63** | Threshold detector 3 source | 702 | |
| **12.65** | Threshold detector 3 hysteresis | 0.5 | |
| **12.66** | Threshold detector 3 output inversion | Yes | |
| **14.02** | Main reference source | 701 | |
| **14.03** | PID reference source | 701 | |
| **14.04** | PID feedback source | 124 | |
| **14.09** | PID enable condition | 901 | |
| **14.10** | PID proportional gain | 100 | 150 |
| **14.11** | PID integral gain | 80 | 75 |
| **14.14** | PID minimum limit | 0 | |
| **14.16** | PID output destination | 136 | |
| **14.53** | Sensor read coefficient | 10 | |
| **16.02** | Timer 1 source | 902 | |
| **16.05** | Timer 1 value | 10 | |
| **16.12** | Timer 2 source | 961 | |
| **16.15** | Timer 2 value (timed stop on Fmin) | 25 | |
| **16.22** | Input source timer 3 | 1631 | |
| **16.25** | Timer set 3 | 3 | |
| **16.32** | Input source timer 4 | 1202 | |
| **16.35** | Timer set 4 | 10 | |
| **16.39** | Output destination 4 | 1230 | |
| **16.42** | Input ON auto maintain 1 | 1261 | |
| **16.43** | Input OFF auto maintain 1 | 1611 | |
| **16.52** | Input ON auto maintain 2 | 1601 | |
| **16.53** | Input OFF auto maintain 2 | 804 | |
| **16.54** | Input inversion OFF set 2 | Yes | |
| **16.59** | Output destination auto maintain 2 | 1061 | |
| **16.62** | Input ON auto maintain 3 | 1631 | |
| **16.63** | Input OFF auto maintain 3 | 1671 | |
| **16.64** | Input inversion OFF set 3 | Yes | |
| **16.69** | Output destination auto maintain 3 | 142 | |
| **16.72** | Input ON auto maintain 4 | 804 | |
| **16.73** | Input OFF auto maintain 4 | 1202 | |
| **16.74** | Input inversion OFF set 4 | Yes | VMA 33/34 |

**05 = TORQUE CTRL**

| Parameter | Parameter definition | Factory setting | |
|---|---|---|---|
| **01.14** | Selection of references | ana. input 1 | |
| **06.04** | Start/stop logic select | Latched Run/ | |
| **06.43** | Origin of commands | via terminals | |
| **07.06** | ADI1 mode | 0-10V | |
| **07.10** | ADI1 input destination | 01.36 | |
| **07.11** | ADI2 mode | 0-10V | |
| **07.14** | ADI2 input destination | 04.08 | |
| **07.15** | ADIO3 mode | 0-10V output | |
| **07.16** | ADIO3 input or output scaling | 1.0 | |
| **07.17** | ADIO3 input or output inversion | no | |
| **07.18** | ADIO3 input destination/output source | 10.90 | |
| **08.10** | Drive enable mode select | interlock | |
| **08.11** | Digital input or output DI01 invert | yes | |
| **08.12** | Digital input DI2 invert | no | |
| **08.13** | Digital input DI3 invert | no | |
| **08.14** | Digital input DI4 invert | no | |
| **08.21** | DIO1 input destination | 10.61 | |
| **08.22** | DI2 input destination | 06.30 | |
| **08.23** | DI3 input destination | 06.32 | |
| **08.24** | DI4 input destination | 04.11 | |
| **08.31** | Selection of terminal DIO1 as input or output | input | VMA 33/34 |

**05 = FASTER/SLOWER NO ESFR (VMA 31/32)**

| Parameter | Parameter definition | Factory setting |
|---|---|---|
| **01.10** | Selection of bi-directional mode | + and - ref |
| **01.14** | Selection of references | ana. input 1 |
| **01.15** | Selection of preset frequencies | via terminals |
| **02.51** | Ramp hold | > Vmin |
| **06.04** | Start/stop logic select | Latched Run/ |
| **06.43** | Origin of commands | via terminals |
| **07.06** | ADI1 mode | 0-10V |
| **07.08** | ADI1 input scaling | 1.0 |
| **07.09** | ADI1 input invert | no |
| **07.10** | ADI1 input destination | 01.36 |
| **07.11** | ADI2 mode | PTC sensor |
| **07.14** | ADI2 input destination | 00.00 |
| **07.15** | ADIO3 mode | Digital input |
| **07.16** | ADIO3 input or output scaling | 1.0 |
| **07.17** | ADIO3 input or output invert | yes |
| **07.18** | ADIO3 input destination/output source | 01.45 |
| **08.11** | Digital input or output DI01 invert | yes |
| **08.12** | Digital input DI2 invert | no |
| **08.13** | Digital input DI3 invert | no |
| **08.14** | Digital input DI4 invert | no |
| **08.21** | DIO1 input destination | 10.61 |
| **08.22** | DI2 input destination | 06.30 |
| **08.23** | DI3 input destination | 06.32 |
| **08.24** | DI4 input destination | 00.00 |
| **08.31** | Selection of terminal DIO1 as input or output | input |
| **09.04** | No. 1 AND function source 1 | 08.04 |
| **09.05** | No. 1 AND function source 1 invert | yes |
| **09.06** | No. 1 AND function source 2 | 09.02 |
| **09.07** | No. 1 AND function source 2 invert | yes |
| **09.08** | No. 1 AND output invert | no |
| **09.10** | No. 1 AND output destination | 02.03 |
| **09.14** | No. 2 AND function source 1 | 01.45 |
| **09.16** | No. 2 AND function source 2 | 10.07 |

# VARMECA 30
## Variable speed motors and geared motors
APPENDIX



**05 = FASTER/SLOWER ESFR (VMA 31/32)**

**05 = FASTER/SLOWER (VMA 33/34)**

| Parameter | Parameter definition | Factory setting | |
|---|---|---|---|
| **01.10** | Selection of bi-directional mode | + and - ref | |
| **01.14** | Selection of references | ana. input 1 | |
| **01.15** | Selection of preset frequencies | via terminals | |
| **02.51** | Ramp hold | > Vmin | |
| **06.04** | Start/stop logic select | Latched Run/Stop | |
| **06.43** | Origin of commands | via terminals | |
| **07.06** | ADI1 mode | 0-10V | |
| **07.08** | ADI1 input scaling | 1.0 | |
| **07.09** | ADI1 input invert | no | |
| **07.10** | ADI1 input destination | 01.36 | |
| **07.11** | ADI2 mode | Digital input | PTC sensor |
| **07.14** | ADI2 input destination | 12.51 | 00.00 |
| **07.15** | ADIO3 mode | Digital input | |
| **07.16** | ADIO3 input or output scaling | 1.0 | |
| **07.17** | ADIO3 input or output invert | yes | |
| **07.18** | ADIO3 input destination/output source | 01.45 | |
| **08.10** | Drive enable mode select | lock | |
| **08.11** | Digital input or output DI01 invert | no | |
| **08.12** | Digital input DI2 invert | no | |
| **08.13** | Digital input DI3 invert | no | |
| **08.14** | Digital input DI4 invert | no | |
| **08.21** | DIO1 input destination | 12.40 | 12.51 |
| **08.22** | DI2 input destination | 06.30 | |
| **08.23** | DI3 input destination | 06.32 | |
| **08.24** | DI4 input destination | 00.00 | |
| **08.31** | Selection of terminal DIO1 as input or output | output | |
| **09.04** | No. 1 AND function source 1 | 08.04 | |
| **09.05** | No. 1 AND function source 1 invert | yes | |
| **09.06** | No. 1 AND function source 2 | 09.02 | |
| **09.07** | No. 1 AND function source 2 invert | yes | |
| **09.08** | No. 1 AND output invert | no | |
| **09.10** | No. 1 AND output destination | 02.03 | |
| **09.14** | No. 2 AND function source 1 | 01.45 | |
| **09.16** | No. 2 AND function source 2 | 10.07 | VMA 33/34 |

# VARMECA 30
## Variable speed motors and geared motors
APPENDIX

**05 = MOTORISED POT.**

| Parameter | Parameter definition | Factory setting | |
|---|---|---|---|
| **01.09** | Reference offset select | ref + 01.04 | |
| **01.14** | Selection of references | ana. input 1 | |
| **06.04** | Start/stop logic select | Latched Run/ | |
| **06.43** | Origin of commands | via terminals | |
| **07.06** | ADI1 mode | 0-10V | |
| **07.10** | ADI1 input destination | 01.36 | |
| **07.11** | ADI2 mode | Digital input | |
| **07.14** | ADI2 input destination | 09.26 | |
| **07.15** | ADIO3 mode | 0-10V output | |
| **07.16** | ADIO3 input or output scaling | 1.0 | |
| **07.17** | ADIO3 input or output invert | no | |
| **07.18** | ADIO3 input destination/output source | 10.90 | |
| **08.10** | Drive enable mode select | lock | |
| **08.11** | Digital input or output DI01 invert | yes | |
| **08.12** | Digital input DI2 invert | no | |
| **08.13** | Digital input DI3 invert | no | |
| **08.14** | Digital input DI4 invert | no | |
| **08.21** | DIO1 input destination | 10.61 | |
| **08.22** | DI2 input destination | 06.30 | |
| **08.23** | DI3 input destination | 06.32 | |
| **08.24** | DI4 input destination | 09.27 | |
| **08.31** | Selection of terminal DIO1 as input or output | input | |
| **09.25** | Faster/slower reference destination | 01.04 | VMA 33/34 |

# VARMECA 30
## Variable speed motors and geared motors
APPENDIX



**DESCRIPTION OF SEQUENTIAL BRAKE CONTROL**

To enable sequential brake control, set parameter **0.36**.

**0.36** = ON CONTACT (ESFR OPTION ENABLED) OR ON RELAY OR ANY ASSIGNMENT using parameter **12.41**.

**Parameters related to brake control:**

| Parameter | Name | Type | Factory setting | Adjustment range |
|---|---|---|---|---|
| **36** | BRAKE CONTROL | R-W | DISABLED | DISABLED; ON CONTACT (Address menu in manual reference 3997: 12.41) |
| **37** | BRAKE RELEASE CURRENT THRESHOLD | R-W | 10.0% | 0 to 200.0% (Address menu in manual reference 3997: 12.42) |
| **38** | BRAKE APPLY CURRENT THRESHOLD | R-W | 10.0% | 0 to 200.0% (Address menu in manual reference 3997: 12.43) |
| **39** | BRAKE RELEASE HZ THRESHOLD | R-W | 1.0 Hz | 0 to 20.0 Hz (Address menu in manual reference 3997: 12.44) |
| **40** | BRAKE APPLY HZ THRESHOLD | R-W | 2.0 Hz | 0 to 20.0 Hz (Address menu in manual reference 3997: 12.45) |
| **41** | MAGNETISATION TIME DELAY | R-W | 0.1 s | 0 to 25.0 s (Address menu in manual reference 3997: 12.46) |
| **42** | RAMP UNLOCK TIME DELAY | R-W | 0.1 s | 0 to 25.0 s (Address menu in manual reference 3997: 12.47) |

**Sequential brake control**:

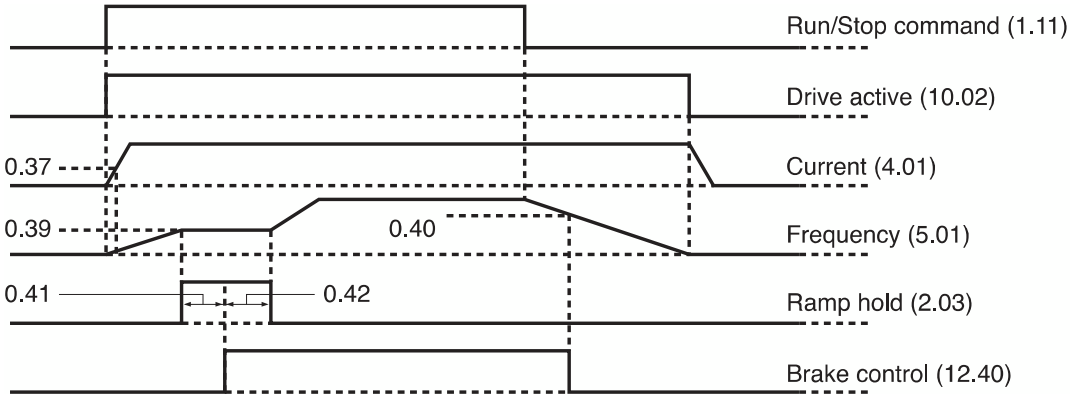


**IMPORTANT NOTE**

In VMA 31/32, when 36 = ON CONTACT, the assignment of terminal DI01 is automatically enabled for brake control.
The parameters concerning terminal DI01 become: 33 = NO; 34 = OUTPUT; 35 = 1240.

If brake control is disabled, 36 = DISABLED. Terminal DI01 must then be reassigned to external fault management via the following parameters: 33 = YES; 34 = INPUT; 35 = 1061, thus returning to the standard configuration.

The fault "loss of phase" is linked to the brake command. When the motor is rotating, if the motor current falls below the set point in parameter 38 (or 12.43), the drive goes into fault mode "loss of phase".
To disconnect this control, parameter 38 (or 12.43) must be set to "0".

# VARMECA 30

## Variable speed motors and geared motors

NOTE

**LEROY-SOMER 16015 ANGOULÊME CEDEX - FRANCE**

RCS ANGOULÊME N° B 671 820 223
Limited company with capital of 62,779,000 €
*www.leroy-somer.com*

LEROY SOMER®

Doc No: 30923-3

3776 en - 2010.12 / j

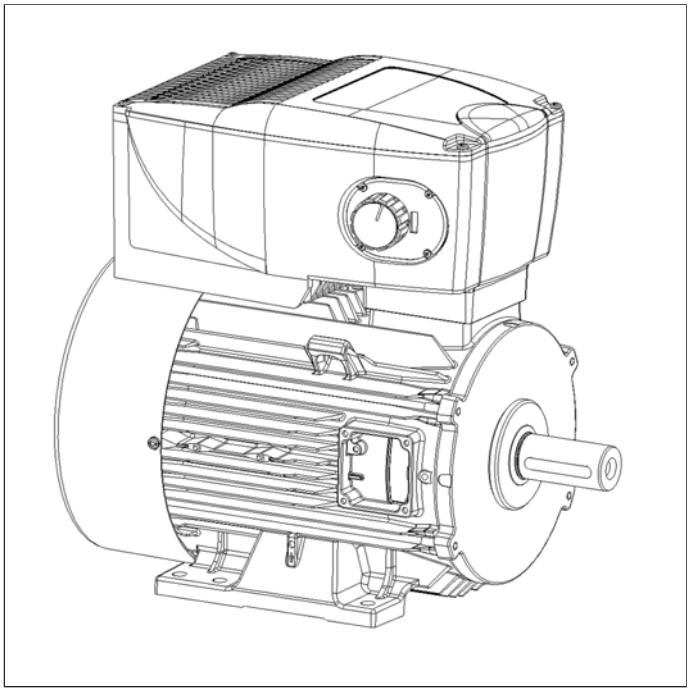

27

en

This manual is to be given to the end user

# VARMECA 30

## Variable speed motor or geared motor

### Installation and maintenance

# VARMECA 30

## Variable speed motor or geared motor

**NOTE**

LEROY-SOMER reserves the right to modify the characteristics of its products at any time in order to incorporate the latest technological developments. The information contained in this document may therefore be changed without notice.

**CAUTION**

For the user's own safety, this VARMECA 30 motor must be connected to an approved earth ( ⏚ terminal).
If accidentally starting the installation is likely to cause a risk to personnel or the machines being driven, it is essential to supply the equipment via a circuit-breaking device (power contactor) which can be controlled via an external safety system (emergency stop, detection of errors on the installation).

The VARMECA 30 motor is fitted with safety devices which, in the event of a fault, control stopping and thus stop the motor. The motor itself can become jammed for mechanical reasons. Voltage fluctuations, and in particular power cuts, may also cause the motor to stop.
The removal of the causes of the shutdown can lead to restarting, which may be dangerous for certain machines or installations.
In such cases, it is essential that the user takes appropriate precautions against the motor restarting after an unscheduled stop.
The variable speed drive is designed to be able to supply a motor and the driven machine above its rated speed.
If the motor or the machine are not mechanically designed to withstand such speeds, the user may be exposed to serious danger resulting from their mechanical deterioration. It is important that the user checks that the installation can withstand it, before programming a high speed.
The variable speed drive which is the subject of this manual is designed to be integrated in an installation or an electrical machine, and can under no circumstances be considered to be a safety device. It is therefore the responsibility of the machine manufacturer, the designer of the installation or the user to take all necessary precautions to ensure that the system complies with current standards, and to provide any devices required to ensure the safety of equipment and personnel.

LEROY-SOMER declines all responsibility in the event of the above recommendations not being observed.

# VARMECA 30

## Variable speed motor or geared motor

## SAFETY AND OPERATING INSTRUCTIONS FOR ELECTRICAL ACTUATORS (In accordance with the low voltage directive 2006/95/EC)

**• Throughout the manual, this symbol warns of consequences which may arise from inappropriate use of the VARMECA 30, since electrical risks may lead to material or physical damage as well as constituting a fire hazard.**

**1 - General**

Depending on their degree of protection, VARMECA 30 motors may contain moving parts, as well as hot surfaces, during operation.
Unjustified removal of protection devices, incorrect use, faulty installation or inappropriate operation could represent a serious risk to personnel and equipment.
For further information, consult the manual.
All work relating to transportation, installation, commissioning and maintenance must be performed by experienced, qualified personnel (see IEC 364 or CENELEC HD 384, or DIN VDE 0100 and national specifications for installation and accident prevention).
In these basic safety instructions, qualified personnel means persons competent to install, mount, commission and operate the product and possessing the relevant qualifications.

**2 - Use**

VARMECA 30 motors are components designed for integration in installations or electrical machines.
When integrated in a machine, commissioning must not take place until it has been verified that the machine conforms with directive 2006/42/EC (Machinery Directive).
It is also necessary to comply with standard EN 60204, which stipulates in particular that electrical actuators (which include VARMECA 30) cannot be regarded as circuit-breaking devices and certainly not as isolating switches.
Commissioning can take place only if the requirements of the Electromagnetic Compatibility Directive (EMC 2004/108/EC) are met.
VARMECA 30 motors meet the requirements of the Low Voltage Directive 2006/95/EC. The harmonised standard of the DIN VDE 0160 series in connection with standard VDE 0660, part 500 and EN 60146/VDE 0558 are also applicable.
The technical characteristics and instructions concerning the connection conditions specified on the nameplate and in the documentation provided must be observed without fail.

**3 - Transportation, storage**

All instructions concerning transportation, storage and correct handling must be observed.
The climatic conditions specified in the technical manual must be observed.

**4 - Installation**

The installation and cooling of equipment must comply with the specifications in the manual supplied with the product.
VARMECA 30 motors must be protected against excessive stress. In particular, there must be no damage to parts and/or modification of the clearance between components during transportation and handling. Avoid touching the electronic components and contact parts.
VARMECA 30 motors contain parts which are sensitive to electrostatic stress and may be easily damaged if handled incorrectly. Electrical components must not be exposed to mechanical damage or destruction (risks to health!).

**5 - Electrical connection**

When work is performed on VARMECA 30 motors which are powered up, national accident prevention specifications must be respected.
The electrical installation must comply with the relevant specifications (for example conductor cross-sections, protection via fused circuit-breaker, connection of protective conductor). More detailed information is given in the manual.
Instructions for an installation which meets the requirements for electromagnetic compatibility, such as screening, earthing, presence of filters and correct insertion of cables and conductors, are given in the documentation supplied with the VARMECA 30. These instructions must be followed in all cases, even if the VARMECA 30 carries the CE mark. Adherence to the limits given in the EMC legislation is the responsibility of the manufacturer of the installation or the machine.

**6 - Operation**

Installations incorporating VARMECA 30 motors must be fitted with additional protection and monitoring devices as laid down in the current relevant safety regulations: law on technical equipment, accident prevention regulations, etc. Modification of VARMECA 30 motors using control software is permitted.
Active parts of the device and live power connections must not be touched immediately after the VARMECA 30 is powered down, as the capacitors may still be charged. In view of this, the warnings fixed to VARMECA 30 motors must be observed.
During operation, all protective covers must remain closed.

**7 - Servicing and maintenance**

Refer to the manufacturer's documentation.

**NOTES**

# VARMECA 30

## Variable speed motor or geared motor

**CONTENTS**


**1 - GENERAL INFORMATION ..... 6**
1.1 - General operating principle ..... 6
1.2 - Product name ..... 6
1.3 - Characteristics ..... 7
1.4 - Environmental characteristics ..... 9
1.5 - Radio-frequency interference ..... 9
1.6 - Description of cables and protection devices ..... 12
1.7 - UL conformity ..... 13
1.8 - Weights and dimensions ..... 14

**2 - INSTALLATION ..... 15**
2.1 - General ..... 15

**3 - CONNECTIONS ..... 15**
3.1 - Wiring precautions ..... 15
3.2 - Control terminal blocks ..... 16
3.3 - Power terminal blocks ..... 18
3.4 - Terminal blocks for options ..... 18
3.5 - Wiring diagrams ..... 19
3.6 - Power supply and control for FCR brake motors ..... 23
3.7 - Brake rectified voltage depending on the mains supply ..... 24
3.8 - Example of supplying 2 motors, with or without brake, in parallel, with a single VARMECA ..... 25
3.9 - Wiring diagrams for SO VMA and ESFR VMA ..... 26

**4 - COMMISSIONING ..... 28**
4.1 - Starting with the power supply ..... 28
4.2 - Starting with remote volt-free contact ..... 28
4.3 - Starting with local run/stop control (BMA 31/32, BMA 33/34 or BMAVAR 31/32, BMAVAR 33/34 option) ..... 28
4.4 - Setting the speed ..... 28

**5 - FAULTS-DIAGNOSTICS ..... 29**

**6 - MAINTENANCE ..... 29**
6.1 - Care ..... 29
6.2 - Measurements ..... 29

**7 - OPTIONS ..... 30**
7.1 - Speed control knob (B 31/32 or B 33/34) ..... 30
7.2 - Control knob with integrated run-stop control (BMA31/32 or BMA 33/34) ..... 30
7.3 - Control knob with forward/reverse/stop control (BMAVAR 31/32 or BMAVAR 33/34) ..... 30
7.4 - Internal speed control (CVI VMA 31/32 or CVI VMA 33/34) ..... 30
7.5 - IP 20 braking resistor (RF100 – RF 200 – RF 600) ..... 31
7.6 - IP 20 external braking resistor (RF – BRR – 800 – 200) ..... 31
7.7 - Electromechanical brake power supply and control (SO VMA 31/32) ..... 31
7.8 - Power supply and sequential brake control option (ESFR VMA 31/32) ..... 31
7.9 - Power supply and sequential brake control option (ESFR VMA 33/34) ..... 31
7.10 - Fieldbus ..... 31
7.11 - Encoder feedback (COD VMA 33/34) ..... 31
7.12 - Parameter-setting console (PX LCD) ..... 32
7.13 - Parameter-setting software (VMA SOFT) ..... 32
7.14 - Operator display (PAD VMA 30) ..... 32
7.15 - XPress Key (PX Key) ..... 32
7.16 - EMC filter for VMA 33/34 ..... 33
7.17 - EMC filter for VMA 31M/32M ..... 33
7.18 - EMC filter for VMA31T/32T ..... 33


en

# VARMECA 30

## Variable speed motor or geared motor

# 1 - GENERAL INFORMATION

- **This manual describes the characteristics and installation of the VARMECA 31ML, 31M, 31TL, 31T, 32M, 32TL, 32T, 33TL, 33T, 34TL, 34T.**
- **The VARMECA 30 is designed to operate in an industrial environment. When used with an external EMC filter, the VARMECA 30 complies with standards for residential environment.**
- **If the run command has been enabled, the motor starts as soon as it is switched on.**

## 1.1 - General operating principle

The VARMECA 30 is the physical association of a 3-phase induction motor and an integrated variable speed drive.
The motor allows all kinds of mounting arrangement (foot or flange) and can be combined with standard gearboxes from the LEROY-SOMER range.
In the standard version, the drive with integrated control does not require any connection other than the power supply.

The options may be used to broaden the application range of the VARMECA 30.
Thanks to the advanced technology of the IGBT power module, very high efficiency and reduced noise levels are possible.

## 1.2 - Product name

| **Single-phase power supply 115V ±10% - 50/60Hz** | | **Single-phase power supply 200/240V ±10% - 50/60Hz** | | **3-phase power supply 200/240V ±10% - 50/60Hz** | | **3-phase power supply 400/480V ±10% - 50/60Hz** | |
|---|---|---|---|---|---|---|---|
| Rating | Power (kW) | Rating | Power (kW) | Rating | Power (kW) | Rating | Power (kW) |
| 31 ML 025 | 0.25 | 31 M 025 | 0.25 | 31 TL 025 | 0.25 | 31 T 025 | 0.25 |
| 31 ML 037 | 0.37 | 31 M 037 | 0.37 | 31 TL 037 | 0.37 | 31 T 037 | 0.37 |
| | | 31 M 055 | 0.55 | 31 TL 055 | 0.55 | 31 T 055 | 0.55 |
| | | 31 M 075 | 0.75 | 31 TL 075 | 0.75 | 31 T 075 | 0.75 |
| | | 32 M 090 | 0.90 | 32 TL 090 | 0.90 | 31 T 090 | 0.90 |
| | | 32 M 110 | 1.1 | 32 TL 110 | 1.1 | 31 T 110 | 1.1 |
| | | 32 M 150 | 1.5 | 32 TL 150 | 1.5 | 32 T 150 | 1.5 |
| | | | | 32 TL 180 | 1.8 | 32 T 180 | 1.8 |
| | | | | 32 TL 220 | 2.2 | 32 T 220 | 2.2 |
| | | | | 33 TL 300 | 3 | 32 T 300 | 3 |
| | | | | 33 TL 400 | 4 | 32 T 400 | 4 |
| | | | | 34 TL 550 | 5.5 | 33 T 550 | 5.5 |
| | | | | 34 TL 750 | 7.5 | 33 T 750 | 7.5 |
| | | | | | | 34 T 900 | 9 |
| | | | | | | 34 T 111 | 11 |

# VARMECA 30

## Variable speed motor or geared motor

| OPERATING EXTENSIONS | |
|---|---|
| **Designation** | **Description** |
| B 31/32 or B 33/34 | Integrated speed control knob |
| BMA 31/32 or BMA 33/34 | Speed control knob and integrated run-stop control knob |
| BMAVAR 31/32 or BMAVAR 33/34 | Speed control knob and integrated stop forward/reverse control knob |
| CVI VMA 31/32 or CVI VMA 33/34 | Integrated speed control |
| ESFR VMA 31/32 or ESFR VMA 33/34 | Brake control |
| RF100 – RF200 – RF600 | Braking resistor Power 100, 200 and 600 W |
| RF – BRR – 800 – 200 | Braking resistor Power 800 W – External mounting |
| PX LCD | Parameter-setting console |
| COD VMA 33/34 | Encoder feedback |
| VMA SOFT | Parameter-setting software |
| PAD VMA 31/32 or PAD VMA 33/34 | Local display unit |
| PX KEY | Copy key |
| SO VMA 31/32 | Fixed brake control and power supply (3-phase supply 400-480 V only) |
| VMA COM PB 31/32 or VMA COM PB 33/34 | Fieldbus: PROFIBUS DP |
| VMA COM IS 33/34 | Fieldbus: INTERBUS S |
| VMA COM DT 33/34 | Fieldbus: DEVICENET |
| VMA COM CN 33/34 | Fieldbus: CAN OPEN |
| FLT VMA 31-32M 110/FLT VMA 32M 150 | EMC filter for residential environment – Filter for the single phase range |
| FLT VMA 31/32T 220/FLT VMA 32T 400 | EMC filter for residential environment – Filter for the VMA 31/32 three phase range |
| FLT VMA 33 | EMC filter for industrial environment – Mounting for VMA 33 TL/T |
| FLT VMA 34 | EMC filter for industrial environment – Mounting for VMA 34 TL/T |

en

## 1.3 - Characteristics

### 1.3.1 - Electrical data

| | | |
|---|---|---|
| Power supply | Single-phase supply<br>110V -10 % to 120V +10 % 50-60Hz ± 2 %<br>200V -10 % to 240V +10 % 50-60Hz ± 2 % | 3-phase supply<br>200V -10 % to 240V +10 % 50-60Hz ± 2 %<br>380V -10 % to 480V +10 % 50-60Hz ± 2 % |
| Phase voltage imbalance | - | 3% |
| Output voltage | From 0 V to input voltage | From 0 V to input voltage |
| Power range (kW) | 0.25 - 0.37 - 0.55* - 0.75 - 0.9 - 1.1 - 1.5 | 0.25 - 0.37 - 0.55 - 0.75 - 0.9 -1.1 - 1.5 - 4 - 5.5 - 7.5** - 9 - 11 |
| Maximum number of power-ups per hour | 10 | 100 |

*0.55 kW max. for 115 V supply
**7.5 kW max. for 230 V supply

### 1.3.2 - Characteristics and functions

| Characteristics | VARMECA 30 |
|---|---|
| Motor frequency variation range | - 10 to 80 Hz at constant torque (factory setting can be modified with parameter-setting option)<br>- 10 to 50 Hz for general applications (factory setting can be modified with parameter-setting option)<br>- 0 to Fmax depending on thermal and mechanical limits (Fmax = 400 Hz ; LEROY-SOMER to be consulted anytime the applications requires the drive to run at more than 150 Hz) |
| Efficiency | 97.5% motor efficiency |
| Overload | 150% of In for 60 s<br>10 times per hour |

# VARMECA 30

## Variable speed motor or geared motor

| Pilot control | VARMECA 30 |
|---|---|
| Speed reference | - Analogue reference (0 V or 4 mA) = Minimum speed<br>(10 V or 20 mA) = Maximum speed<br>- 0 to 10 V with integrated potentiometer (B31/32 – B33/34 option)<br>- 0 to 10 V with remote potentiometer<br>- 4 to 20 mA with external reference<br>- Reference with internal potentiometer<br>- Digital references<br>- Fieldbus |
| Speed regulation | - Speed regulation with encoder feedback option for VMA 33 or 34 only<br>- Regulation of a reference with integrated PI loop |
| Run/Stop | - With power supply<br>- With remote volt-free contact<br>- With fieldbus<br>- With local run/stop control |
| Forward/Reverse | - With internal connection on the terminal block<br>- With remote volt-free contact<br>- With fieldbus<br>- With local run/stop control |
| Stop mode | - On ramps (using volt-free contact or integrated control)<br>- Freewheel<br>- With electromechanical brake |
| Ramps | - Ramps adjustable from 0 to 600s |
| Fieldbus | - PROFIBUS DP, INTERBUS S, DEVICENET, CAN OPEN, MODBUS RTU, LS NET |

| Protection | VARMECA 30 |
|---|---|
| Power | - Undervoltage (see notice 3847)<br>- Overvoltage (see notice 3847)<br>- Overloads (see notice 3847)<br>.thermal, drive and motor<br>.protection against locked rotor<br>- Short-circuit<br>.motor windings<br>- Overspeed (see notice 3847) |
| Control | - Short-circuit on 0-10 V/24 V inputs or outputs |
| Drive reset | - By switching off the VARMECA 30 or by opening/closing the connection between the 24V and ENA (VMA 31/32) terminals or SDI 1 and SDI 2 (VMA 33/34) terminals |

## 1.4 - Environmental characteristics

| Characteristics | Level |
|---|---|
| Index of protection | IP 65 |
| Storage temperature | - 40 °C to + 70 °C Conforming to standard IEC 68-2-1. |
| Transport temperature | - 40 °C to + 70 °C |
| Operating temperature | - 20 °C to + 50 °C (with power derated by 1% per °C, above 40 °C) |
| Altitude | < 1000 m without derating.<br>The maximum authorised altitude is 4000 m, but above 1000 m, the continuous output current should be derated by 1% per additional 100 m over 1000 m (eg: for an altitude of 3000 m, derate by 20%). |
| Ambient humidity | 95% non condensing |
| Humidity during storage | 93%, 40 °C, 4 days |
| Vibration | - Exposed product: 0.01 $g^2$/Hz 1 hr in accordance with standard IEC 68-2-34.<br>- Sinusoidal vibration:<br>• VMA 31/32 : 2-9 Hz 3,5 $ms^{-2}$ - 9-100 Hz 10 $ms^{-2}$<br>• VMA 33/34 : 2-6 Hz 3,5 $ms^{-2}$ - 6-100 Hz 5 $ms^{-2}$<br>in accordance with standard IEC 68-2-6. |
| Shocks | Packaged product: 15 g, 6 ms, 500 times/direction in all 6 directions in accordance with standard IEC 68-2-29. |
| Immunity | Conforming to EN61000-6-2 |
| Radiated and conducted emissions | Conforming to EN50081-2 with filter |
| UL standards | Conforming to UL 508 C (E211799) |

## 1.5 - Radio-frequency interference

### 1.5.1 - General

Variable speed drives use high-speed switches (transistors, semi-conductors) which switch high voltages (around 550VDC for 3-phase drives) at high frequencies (several kHz). This provides better efficiency and a low level of motor noise.

As a result, they generate radio-frequency signals which may disturb operation of other equipment or distort measurements taken by sensors:
- due to high-frequency leakage currents which escape to earth via the stray capacity of the drive/motor cable and that of the motor via the metal structures which support the motor.
- by conduction or feedback of R.F. signals on the power supply cable: conducted emissions.
- by direct radiation near to the mains supply power cable or the drive/motor cable: radiated emissions.

These phenomena are of direct interest to the user.
The frequency range concerned (radio frequency) does not affect the energy distribution company.

**⚠ Conformity of the drive is only assured when the mechanical and electrical installation instructions described in this manual are adhered to.**

### 1.5.2 - Standards (Emission)

The maximum emission level is set by the generic industrial (EN 61000-6-4) and residential (EN 61000-6-3) standards.
VARMECA 30 conforms to the following standards:
EN 61000-6-4 (EN 50081-2), EN 61000-6-3 (EN 50081-1), EN 61800-3 (CEI 61800-3).

| Standard | Description | Application | Standard drive | With EMC filter option LEROY-SOMER | |
|---|---|---|---|---|---|
| | | | | Internal mounting | External mounting |
| EN 61800-3 (CEI 61800-3) | Variable speed drive standards | Second environment with unrestricted distribution (DENR) | VMA31M/32M ≤ 4 KHz<br>VMA31T/32T ≤ 4 KHz<br>VMA33T/34T ≤ 4.5 KHz | - | - |
| | | Second environment with restricted distribution (DER) | VMA31M/32M ≤ 4 KHz<br>VMA31T/32T ≤ 4 KHz<br>VMA33T/34T ≤ 4.5 KHz | - | - |
| | | First environment with unrestricted distribution (R) | - | VMA31M ≤ 4 KHz<br>VMA32M* ≤ 4 KHz | VMA32M** ≤ 4 KHz<br>VMA31T/32T ≤ 4 KHz |
| | | First environment with restricted distribution (I) | VMA31T/32T ≤ 4 KHz | VMA31M ≤ 4 KHz<br>VMA32M* ≤ 4 KHz<br>VMA33T/34T ≤ 4.5 KHz | VMA32M** ≤ 4 KHz |
| EN 61000-6-3 (EN 50081-1) | Generic emission standards for residential, commercial and light industrial environments | A.C. supply | - | VMA31M ≤ 4 KHz<br>VMA32M* ≤ 4 KHz | VMA32M** ≤ 4 KHz<br>VMA31T/32T ≤ 4 KHz |
| EN 61000-6-4 (EN 50081-2) | Generic emission standards for the industrial environment | A.C. supply | VMA31T/32T ≤ 4 KHz | VMA31M ≤ 4 KHz<br>VMA32M* ≤ 4 KHz<br>VMA33T/34T ≤ 4.5 KHz | VMA32M** ≤ 4 KHz |

* for power ≤ 0.9 kW
** for power 1.1 kW & 1.5 kW
VMA 33/34T residential standard : CONTACT THE FACTORY
Range of switching frequencies : CONTACT THE FACTORY

For the new EN 61800-3 standard April 2005, the drive distribution classes (restricted and unrestricted) are replaced by the drive classes (C1 to C4) defined with respect to drives themselves and its specific application.

**VARMECA motors are associated with PDS categories C2 and C3, for applications category C1, contact the factory.**

**NOTE :**
PDS = Power Drive System

The categories are as follows:

PDS Category C1
PDS for voltages less than 1000V, intended for use in the First environment.

PDS Category C2
PDS for voltages less than 1000V, which are not connected by supply cable and plug, nor mobile equipment, and which, are used in the First environment, and are intended to be installed and put into service only by a professional **(person or organisation having the necessary competence for the installation and/or commissioning of power drive systems, including the aspects of EMC).**

PDS Category C3
PDS for voltages less than 1000V, intended for use in the Second environment and not for use in the First environment.

PDS Category C4
PDS for voltages equal to or greater than 1000V, or rated current equal to or greater than 400 Amps.

First environment :
The first environment includes domestic premises. It also includes establishments directly connected without intermediate transformer to a low voltage power supply network which supplies buildings used for domestic purposes.

Second environment :
The second environment includes all establishments other than those directly connected to a low voltage power supply network which supplies buildings used for domestic purposes.

### 1.5.3 - Standards (Immunity)

The minimum immunity level is set by the generic industrial (EN 51000-6-2) and residential (EN 51000-6-1) standards.
VARMECA 30 conforms to the following standards:
EN 61000-4-2, IEC 61000-4-2 - EN 61000-4-3, IEC 61000-4-3 - EN 61000-4-5, IEC 61000-4-5 - EN 61000-4-6, IEC 61000-4-6 EN 61000-4-11, IEC 61000-4-11 - EN 61000-6-2, IEC 61000-6-2 - EN 61000-3, IEC 61000-3.

| Immunity | | | |
|---|---|---|---|
| **Standard** | **Description** | **Application** | **Conformity** |
| IEC 61000-4-3<br>EN 61000-4-3 | Immunity standards for radiated radio-frequency | Product casing | Level 3 (industrial) |
| IEC 61000-4-6<br>EN 61000-4-6 | Generic immunity standards for conducted radio-frequency | Control and power cables shielded cables outside product | Level 3 (industrial) |
| EN 50082-1<br>IEC 61000-6-1<br>EN 61000-6-1 | Generic immunity standards for residential, commercial and light industrial environments | - | Conforms |
| EN 50082-2<br>IEC 61000-6-2<br>EN 61000-6-2 | Generic immunity standards for the industrial environment | - | Conforms |
| EN 61800-3<br>IEC 61000-6-2<br>EN 61000-6-2 | Variable speed drive standards | Conforms to the first and second environment | |
| EN 61000-4-4 | Bursts of fast transients | Control cable | Level 4 (hardened industrial) |
| | | Power cable | Level 3 (industrial) |
| EN 61000-4-5 | Shock waves | Phase-earth power supply cable | Level 4 |
| | | Phase-to-phase power supply cable | Level 3 |
| | | Earth signal circuits (refer to section 1.5.5) | Level 2 |

### 1.5.4 - Earth leakage current

Earth leakage currents may depend on the type of EMC filter used. The VARMECA 30 can be supplied with its filter integrated and wired-up. The levels of leakage current also depend on the voltage and/or the power supply frequency and the size of the motor.
In all cases, for conformity with immunity standards, a voltage limiting device is connected to earth. The shunt current is negligible in normal circumstances.

#### 1.5.4.1 - Use of earth leakage detector (residual current device)

1- Type AC: which detects AC faults. Not to be used with variable speed drives.
2- Type A: which detects AC faults and pulsed DC faults (provided that the DC is cancelled out at least once per cycle). Only for use with single-phase drives.
3 - Type B: which detects AC faults, pulsed DC faults and smoothed DC faults. **Only this type is suitable for use with all variable speed drives.**

***Note:*** If an external EMC filter is being used, a delay of 50 ms should be incorporated to avoid spurious faults being taken into account.

### 1.5.5 - Control cable immunity

Control cable immunity can be increased outside the VARMECA 30 by one of the following 2 methods:
• Use of shielded twisted pair cable, with shielding connected to earth around its circumference within 100 mm of the VARMECA 30.
• Passing the cable through a ferrite ring at 100 mm maximum distance from the VARMECA 30.

***Note:*** Several control cables can pass through a single ferrite.

### 1.5.6 - Control circuit immunity when overvoltage occurs

Immunity to overvoltages in control circuits or in long cables connected to the outside of a building.
The various drive input and output circuits conform to standard EN61000-6-2 (1 kV) relating to overvoltages.

There are some exceptions, where the installation may be exposed to overvoltage peaks which exceed the levels determined by the standard. This may be the case in the event of lightning strikes or earth faults associated with long cable lengths (>30 m). To limit the risks of damage to the drive, the

following precautions could be taken:
- Galvanic isolation of the I/O.
- Duplication of the cable shielding with an earth wire of 10 mm² minimum. The cable shielding and the earth wire must be linked at both ends and connected to earth with the shortest possible connection. This stratagem enables high currents to pass into the earth wire, rather than into the shielding.
- Reinforcement of the logic and analogue I/O protection by adding a zener diode or a peak limiter.

**Elimination of uni-directional logic and analogue I/O overvoltages**

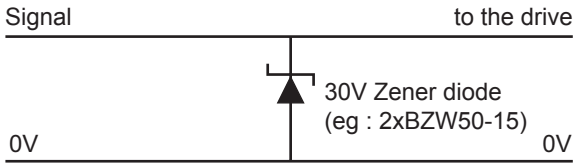


These circuits are available in modules (DIN rail mounting). These circuits are not suitable for encoder signals or for high-speed logic data networks, because the diodes may affect the signal. The majority of encoders have galvanic isolation between the motor casing and the encoder circuit, and in this case, no precautions are necessary. For data networks, follow the specific network recommendations.

If a logic output is subjected to significant overvoltages, the drive trips on an «Old1» fault.

## 1.6 - Description of cables and protection devices

**⚠ • It is the responsibility of the user to connect and provide protection for the VARMECA 30 in accordance with the legislation and regulations in force in the country of use. This is particularly important as regards the size of cables, the type and rating of fuses, the earth or ground connection, powering down, acknowledging faults, insulation and protection against overcurrents.**
**• These tables are given for information only, and must under no circumstances be used in place of the current standards.**
**• When using a circuit-breaker, it must be a motor circuit-breaker (D curve).**
**• The residual current device must be type B. Too many devices connected to a single residual current device can cause it to trip. Check that the circuit-breaker is only protecting the VARMECA.**
**• Comply with the size of protection fuses.**

| P (kW) | Single-phase power supply 110V - 10 % to 120V + 10 % | | | | | Single-phase power supply 208V - 10 % to 240V + 10 % | | | | |
|---|---|---|---|---|---|---|---|---|---|---|
| | VMA rating | Fuses (gG) | I (A) | Cables (mm²) | PE | VMA rating | Fuses (gG) | I (A) | Cables (mm²) | PE |
| 0.25 | 31 ML 025 | 8 | 6.8 | 1.5 | M16 + M20 | 31 M 025 | 8 | 3.5 | 1.5 | M16 + M20 |
| 0.37 | 31 ML 037 | 10 | 8.5 | 1.5 | M16 + M20 | 31 M 037 | 10 | 4 | 1.5 | M16 + M20 |
| 0.55 | | | | | | 31 M 055 | 10 | 4.5 | 1.5 | M16 + M20 |
| 0.75 | | | | | | 31 M 075 | 16 | 7 | 2.5 | M16 + M20 |
| 0.9 | | | | | | 32 M 090 | 16 | 9 | 2.5 | M16 + M20 |
| 1.1 | | | | | | 32 M 110 | 20 | 11 | 2.5 | M16 + M20 |
| 1.5 | | | | | | 32 M 150 | 25 | 14 | 2.5 | M16 + M20 |

# VARMECA 30

## Variable speed motor or geared motor

| P (kW) | Three-phase power supply 208V - 10 % to 240V + 10 % | | | | | Three-phase power supply 380V - 10 % to 480V + 10 % | | | | |
|---|---|---|---|---|---|---|---|---|---|---|
| | VMA rating | Fuses (gG) | I (A) | Cables ($mm^2$) | PE | VMA rating | Fuses (gG) | I (A) | Cables ($mm^2$) | PE |
| 0.25 | 31 TL 025 | 4 | 2 | 1.5 | M16 + M20 | 31 T 025 | 4 | 1 | 1.5 | M16 + M20 |
| 0.37 | 31 TL 037 | 6 | 3 | 1.5 | M16 + M20 | 31 T 037 | 4 | 1.5 | 1.5 | M16 + M20 |
| 0.55 | 31 TL 055 | 6 | 4 | 1.5 | M16 + M20 | 31 T 055 | 6 | 2 | 1.5 | M16 + M20 |
| 0.75 | 31 TL 075 | 8 | 5 | 1.5 | M16 + M20 | 31 T 075 | 6 | 3 | 1.5 | M16 + M20 |
| 0.9 | 32 TL 090 | 10 | 5.5 | 1.5 | M16 + M20 | 31 T 090 | 8 | 3.5 | 1.5 | M16 + M20 |
| 1.1 | 32 TL 110 | 10 | 6 | 2.5 | M16 + M20 | 31 T 110 | 10 | 4 | 1.5 | M16 + M20 |
| 1.5 | 32 TL 150 | 16 | 7 | 2.5 | M16 + M20 | 32 T 150 | 10 | 5 | 1.5 | M16 + M20 |
| 1.8 | 32 TL 180 | 16 | 7.5 | 2.5 | M16 + M20 | 32 T 180 | 10 | 5.5 | 2.5 | M16 + M20 |
| 2.2 | 32 TL 220 | 16 | 8 | 2.5 | M16 + M20 | 32 T 220 | 10 | 6 | 2.5 | M16 + M20 |
| 3 | 33 TL 300 | 16 | 12 | 2.5 | M20 + M25 | 32 T 300 | 16 | 7 | 2.5 | M16 + M20 |
| 4 | 33 TL 400 | 20 | 15 | 4 | M20 + M25 | 32 T 400 | 16 | 8 | 2.5 | M16 + M20 |
| 5.5 | 34 TL 550 | 25 | 20 | 4 | M20 + M25 | 33 T 550 | 16 | 12 | 2.5 | M20 + M25 |
| 7.5 | 34 TL 750 | 32 | 24 | 4 | M20 + M25 | 33 T 750 | 20 | 16 | 4 | M20 + M25 |
| 9 | | | | | | 34 T 900 | 25 | 19 | 4 | M20 + M25 |
| 11 | | | | | | 34 T 111 | 32 | 22 | 4 | M20 + M25 |

***Note:***

• The mains current value is a typical value which depends on the source impedance. The higher the impedance, the lower the current.

• The fuses (UL approved) are intended for installations capable of delivering 5000 A maximum at 480 V.

## 1.7 - UL conformity

### 1.7.1 - Specified mains supply

The drive can be incorporated in an installation which can deliver 5000 A rms maximum at a voltage of 264 VAC rms maximum for 230 V (TL) drives or 528 VAC rms maximum for 400 V (T) drives.

### 1.7.2 - Cables

Only class 1 copper cables 60/75 °C (140/167 °F) should be used.

### 1.7.3 - Fuses

UL conformity is adhered to if the fuses used are UL-listed, fast-blow fuses (class CC up to 30 A) with a rating as indicated in the above table, and if the short-circuit symmetrical current does not exceed 5 kA.

# VARMECA 30

## Variable speed motor or geared motor

## 1.8 - Weights and dimensions

| Type | VMA rating | Dimensions (mm) | | | | | | | Weight (kg) |
|---|---|---|---|---|---|---|---|---|---|
| | | HJ | LJ | | | J | I | II* | |
| | | | B3 | B5 | B14 | | | | |
| LS 71 | 31ML-31M - 31TL - 31T | 176 | 8 | 8 | 8 | 217 | 75 | 94 | 4.2 |
| LS 80 L | 31ML-31M - 31TL - 31T | 190 | 12 | 12 | 12 | 217 | 75 | 94 | 4.2 |
| | 32M - 32TL | 190 | 12 | 12 | 12 | 232 | 75 | 94 | 4.2 |
| LS 90 S/L | 31T | 199 | 12 | 32 | 13 | 217 | 75 | 94 | 4.2 |
| | 32M - 32 TL | 199 | 12 | 32 | 13 | 232 | 75 | 94 | 4.2 |
| LS 100 L | 32TL - 32T | 205 | 12 | 12 | 12 | 232 | 75 | 94 | 4.2 |
| | 33TL | 270 | 4 | 4 | 4 | 336 | 115 | 141 | 8.1 |
| LS 112 M | 32T | 204 | 12 | 12 | 12 | 232 | 75 | 94 | 4.2 |
| | 33TL | 270 | 4 | 4 | 4 | 336 | 115 | 141 | 8.1 |
| LS 112 MG | 32T | 213 | 21 | 21 | 21 | 232 | 75 | 94 | 4.2 |
| | 33TL | 280 | 13 | 13 | 13 | 336 | 115 | 141 | 8.1 |
| LS 132 S | 32T | 213 | 39 | 39 | 39 | 232 | 75 | 94 | 4.2 |
| | 33TL - 33T | 280 | 30 | 30 | 30 | 336 | 115 | 141 | 8.1 |
| LS 132 M | 33T - 34TL - 34T | 300 | 8 | 8 | 8 | 336 | 115 | 141 | 8.1 |
| LS 160 M/MR | 34T | 309 | 38 | 38 | 38 | 336 | 115 | 141 | 8.1 |

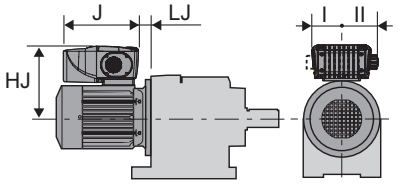

# VARMECA 30

## Variable speed motor or geared motor

## 2 - INSTALLATION

**• It is the responsibility of the owner or user to ensure that the installation, operation and maintenance of the drive and its options comply with legislation relating to the safety of people and equipment and with the regulations in force in the country of use.**
**• Before carrying out any work, disconnect and lock the drive power supply. For the single-phase range, wait 2 minutes to make sure that the capacitors have discharged.**
**• After connection, ensure that the seals are firmly in place, and that the screws and cable glands are watertight to ensure IP 65 protection. Tightening torque for cover screws : 5 Nm.**
**• Holes are provided at the lowest points of the enclosure, depending on the operating position, to drain off any moisture that may have accumulated inside during cooling of the machine. In conditions which encourage the formation of condensation, it is advisable to leave the drain holes permanently open.**
**• When the cover is open, the VARMECA 30 degree of protection is IP10. Any work should only be carried out by experienced, qualified personnel.**

### 2.1 - General

The VARMECA 30 motor is fitted to the machine like a standard motor, with flange or foot mounting.
The motor ventilation cools the whole assembly. Make sure that the ventilation air inlet is free of obstruction.
The positions of the potentiometer/cable gland supports are specified at the time of ordering. However they may be reversed if necessary.

en

## 3 - CONNECTIONS

**• All connection work must be performed in accordance with the laws in force in the country where the drive is installed. This includes earthing to ensure that no directly accessible part of the drive can be at the mains voltage or any other voltage which may be dangerous.**
**• The voltages on the cables or connections of the mains supply, the motor, the braking resistor or the filter may cause fatal electric shocks. Contact must be avoided in all circumstances.**
**• The drive must be supplied via a circuit-breaking device so that it can be powered down safely.**
**• The drive contains capacitors which remain charged at a fatal voltage even after the power supply has been cut off.**
**• Wait 2 minutes after powering down the drive before removing the protection devices.**
**• The drive power supply must be protected against overloads and short-circuits.**
**• It is vital to respect the rating of protection devices.**
**• Connection with copper conductor only.**
**• Check that the voltage and current of the drive, the motor and the mains supply are compatible.**
**• After the drive has been operating, the heatsink or the braking resistors may be very hot (avoid touching them).**

### 3.1 - Wiring precautions

• When the VARMECA 30 is controlled remotely, avoid parallel routing of power cables and control cables.
• All remote control cables must be shielded and have a cross-section between 0.22 $mm^2$ and 1 $mm^2$. The shielding should be connected to earth at both ends.
• Check that the different earth points are actually at the same voltage.
• Incorporate a bend where the cables enter the cable glands so that water cannot penetrate the terminal box.
• Tighten the cable gland firmly.

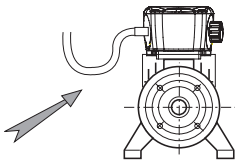

**• The VARMECA 30 has a positive logic configuration.**
**Using a drive with a control system which has a different control logic may cause unwanted starting of the motor.**
**• The control circuits in the drive are isolated from the power circuits by single insulation (IEC 664-1). The installer must ensure that the external control circuits are isolated against any human contact.**
**• If the control circuits need to be connected to circuits conforming to SELV safety requirements, additional insulation must be inserted to maintain the SELV classification.**

## 3.2 - Control terminal blocks

**• Check that the terminal block has been removed from its fixed holder (unplugged) before making any connections, so as to avoid putting pressure on the card.**
**• The VARMECA has a positive logic configuration. Using a drive with a control system which has a different control logic may cause unwanted starting of the motor.**
**• The control circuits in the drive are isolated from the power circuits by single insulation (IEC 664-1).**
**The installer must ensure that the external control circuits are isolated against any human contact.**
**• If the control circuits need to be connected to circuits conforming to SELV safety requirements, additional insulation must be inserted to maintain the SELV classification.**

**Removable screw terminal block:**
**- Tightening torque = 0.3 N.m**
**- Max. cross-section = 1.5 mm²**

| VMA terminal 33/34 | VMA terminal 31/32 | Designation | Function | Characteristics | |
|---|---|---|---|---|---|
| 1 | 1 | 10V | +10V analogue internal source | Accuracy | ± 2% |
| | | | | Maximum output current | 30 mA |
| 2 | 2 | ADI1 | Analogue or logic input 1<br>**Assignment in standard configuration: 0-10V speed reference** | Voltage input | |
| | | | | Full scale voltage | 10 V ± 2% |
| | | | | Input impedance | 95 kΩ |
| | | | | Current input | |
| | | | | Current range | 0 to 20 mA ± 5% |
| | | | | Input impedance | 500 Ω |
| | | | | Resolution | 10 bits |
| | | | | Sampling | 6 ms |
| | | | | Logic input (if connected to the +24V) | |
| | | | | Thresholds | «0»: < 5 V – «1»: > 10 V |
| | | | | Voltage range | 0 to +24 V |
| | | | | Load | 95 kΩ |
| | | | | Input threshold | 7.5 V |
| 3 | 3 | 0V | Logic circuit common 0V | | |
| 4 | 4 | ADI2 | Analogue or logic input 2<br>**Assignment in standard configuration: Motor PTC input** | Voltage input | |
| | | | | Full scale voltage | 10 V ± 2% |
| | | | | Input impedance | 95 kΩ |
| | | | | Current input | |
| | | | | Current range | 0 to 20 mA ± 5% |
| | | | | Input impedance | 500 Ω |
| | | | | Resolution | 10 bits |
| | | | | Sampling | 6 ms |
| | | | | Logic input (if connected to the +24V) | |
| | | | | Thresholds | «0»: < 5 V – «1»: > 10 V |
| | | | | Voltage range | 0 to +24 V |
| | | | | Load | 95 kΩ |
| | | | | Input threshold | 7.5 V |
| | | | | Input (PTC) | |
| | | | | Trip | 3300 Ω |
| | | | | Cleared fault threshold | < 1800 Ω |
| 5 | NA | 0V | Logic circuit common 0V | | |

# VARMECA 30

## Variable speed motor or geared motor



| VMA terminal 33/34 | VMA terminal 31/32 | Designation | Function | Characteristics | |
|---|---|---|---|---|---|
| 6 | 6 | ADIO3 | Analogue or logic input or analogue output 3<br>**Assignment in standard configuration: Analogue output (LED control option for VMA 31 up to 34)** | Characteristics | Analogue voltage (common mode) or uni-directional current |
| | | | | Voltage input | |
| | | | | Full scale voltage | 10 V ± 2% |
| | | | | Input impedance | 95 kΩ |
| | | | | Current input | |
| | | | | Current range | 0 to 20 mA ± 5% |
| | | | | Input impedance | 500 Ω |
| | | | | Resolution | 10 bits |
| | | | | Sampling | 6 ms |
| | | | | Logic input (if connected to the +24V) | |
| | | | | Thresholds | «0»: < 5 V – «1»: > 10 V |
| | | | | Voltage range | 0 to +24 V |
| | | | | Load | 95 kΩ |
| | | | | Input threshold | 7.5 V |
| | | | | Voltage output | |
| | | | | Voltage range | 0 to 10 V |
| | | | | Load resistor | 2 kΩ |
| | | | | Protection | Short-circuit (40 mA max) |
| | | | | Current output **(VMA 33/34 only)** | |
| | | | | Current range | 0 to 20 mA |
| | | | | Maximum voltage | 10 V |
| | | | | Load resistor | 500 Ω |
| 7 | 7 | DIO1 | Digital input or output 1<br>**Assignment in standard configuration: External fault management** | Characteristics | Digital input or output 1 |
| | | | | Thresholds | «0»: < 5 V – «1»: > 10 V |
| | | | | Voltage range | 0 to +24 V |
| | | | | Sampling/refreshment | 2 ms |
| | | | | Digital input | |
| | | | | Absolute maximum voltage range | 0 to +35 V |
| | | | | Load | 15 kΩ |
| | | | | Input threshold | 7.5 V |
| | | | | Logic output | |
| | | | | Maximum output current | 50 mA |
| | | | | Overload current | 50 mA |
| 8 | 5 | 24V | +24V internal source | Output current | VMA 31/32 : 30 mA - VMA 33/34 : 100mA |
| | | | | Overload current | VMA 31/32 : 60 mA - VMA 33/34 : 150mA |
| 11 | 11 | | | Accuracy | ± 5% |
| | | | | Protection | Current limiting and setting to fault mode |
| 9 | 8 | DI2 | Logic input 2<br>**Assignment in standard configuration: Run forward** | Characteristics | Logic input (positive logic) |
| | | | | Thresholds | «0»: < 5 V – «1»: > 10 V |
| | | | | Voltage range | 0 to +24 V |
| 10 | 9 | DI3 | Logic input 3<br>**Assignment in standard configuration: Run reverse** | Sampling/refreshment | 2 ms |
| | | | | Absolute maximum voltage range | 0 to +35 V |
| 12 | 10 | DI4 | Logic input 4<br>**Assignment in standard configuration: Selection of ADI1 type 0-10 V or 4-20 mA reference** | Load | 15 kΩ |
| | | | | Input threshold | 7.5 V |
| 13 | NA | SDI1 | +24V dedicated to the safety input | Characteristics | Logic input (positive logic) |
| | | | | Thresholds | «0»: < 5 V – «1»: > 18 V |
| 14 | 12 | SDI2/ENA | Safety/unlocking input | Voltage range | 9 to +33 V |
| | | | | Impedance | 820 Ω |
| 15 | 13 | COM/RL1 | Fault relay output | Characteristics | VMA 33/34: NO_NC single-pole changeover contact<br>VMA 31/32: NO single-pole contact |
| 16 | NA | RL1C | | 250 VAC maximum contact current | - 4 A, resistive load |
| 17 | 14 | RL1O/RL2 | | | - 2 A, inductive load |
| 18 | NA | SDO1 | Safety contact | Characteristics | NO single-pole changeover contact |
| 19 | NA | SDO2 | | 250 VAC maximum contact current | - 4 A, resistive load<br>- 2 A, inductive load |

# VARMECA 30

## Variable speed motor or geared motor

## 3.3 - Power terminal blocks

### 3.3.1 - Terminal block for power supply PB1 (marked L1, L2 and L3)

This terminal block is used to connect the 3-phase power supply when the EMC filter is not supplied with the VARMECA 30. Otherwise, the EMC filter output is screwed onto this connector and the power supply should be attached to the terminals located on top of the filter.

| Screw terminal block: | VMA 33/34 | VMA 31/32 |
|---|---|---|
| Tightening torque: | 1.8 N.m | 0.8 Nm |
| Max. cross-section: | 4 mm² (AWG8) | 2.5 mm² |

### 3.3.2 - Terminal block for braking resistor PB2 (marked R+ and R-)

This terminal block is used to connect a braking resistor when this option is required. The resistor is mounted on the outside and/or the rear of the VARMECA 30 casing.

| Screw terminal block: | VMA 33/34 | VMA 31/32 |
|---|---|---|
| Tightening torque: | 1.8 N.m | 0.8 Nm |
| Max. cross-section: | 4 mm² (AWG8) | 2.5 mm² |

**Note: For the VMA 31/32, PB1 and PB2 are both located on the same terminal block.**

**The terminal block on the VARMECA 31/32 has a terminal marked FI connected to the R- terminal which enables use of the internal braking resistor. The jumper must be removed when an external braking resistor is connected or if the inertia is incompatible with the rated deceleration ramp.**

### 3.3.3 - Earth connection

The earth connection is made using one of the two M5 x 12 (VMA 31/32) screws or M6 x 10 (VMA 33/34) labelled ⏚, located in the front of the VARMECA.

**VMA 31/32**

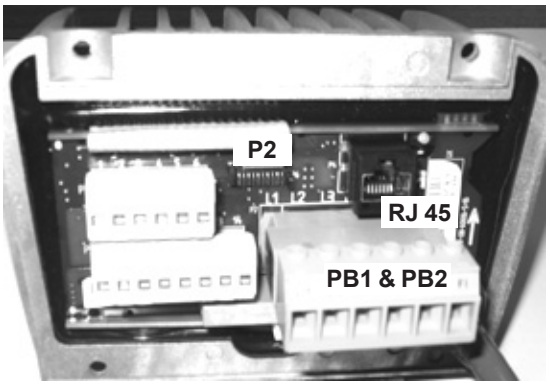


## 3.4 - Terminal blocks for options

### 3.4.1 - RS485 type serial link connector

This is an RJ 45 connector and is used to connect the PX LCD console or a PC in order to use the PEGASE VMA30 programming software.

For the VMA 31/32 it is also used to connect the fieldbus or the PADVMA 31/32 option.

### 3.4.2 - Description of Slot 1 (VMA 33/34 only)

This slot is used to connect the encoder feedback module (option: COD VMA 30) when «closed loop» mode is selected.

### 3.4.3 - Description of Slot 2 (VMA 33/34 only)

This slot is used to connect one of the fieldbus modules (protocols supported: PROFIBUS DP, INTERBUS S, DEVICE NET and CAN OPEN).

### 3.4.4 - P2 connector (VMA 31/32 only)

This is used to connect the following options: Local potentiometer (B 31/32), local potentiometer with integrated Run/Stop (BMA 31/32), local potentiometer with integrated Forward/Reverse/Stop (BMAVAR), Brake control (ESFRVMA 30), etc.

**VMA 33/34**

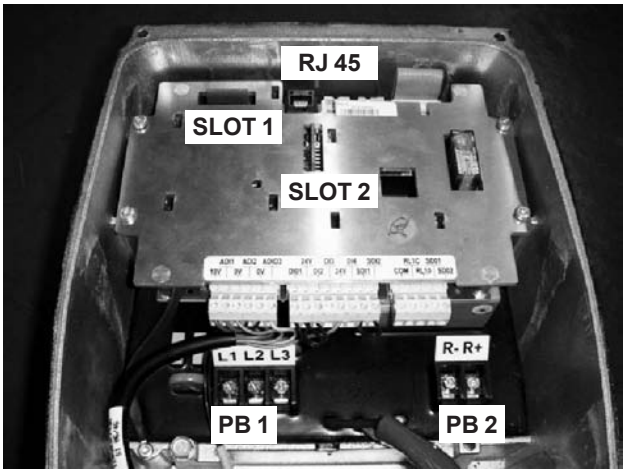

## 3.5 - Wiring diagrams

### 3.5.1 - Standard configuration connection diagram

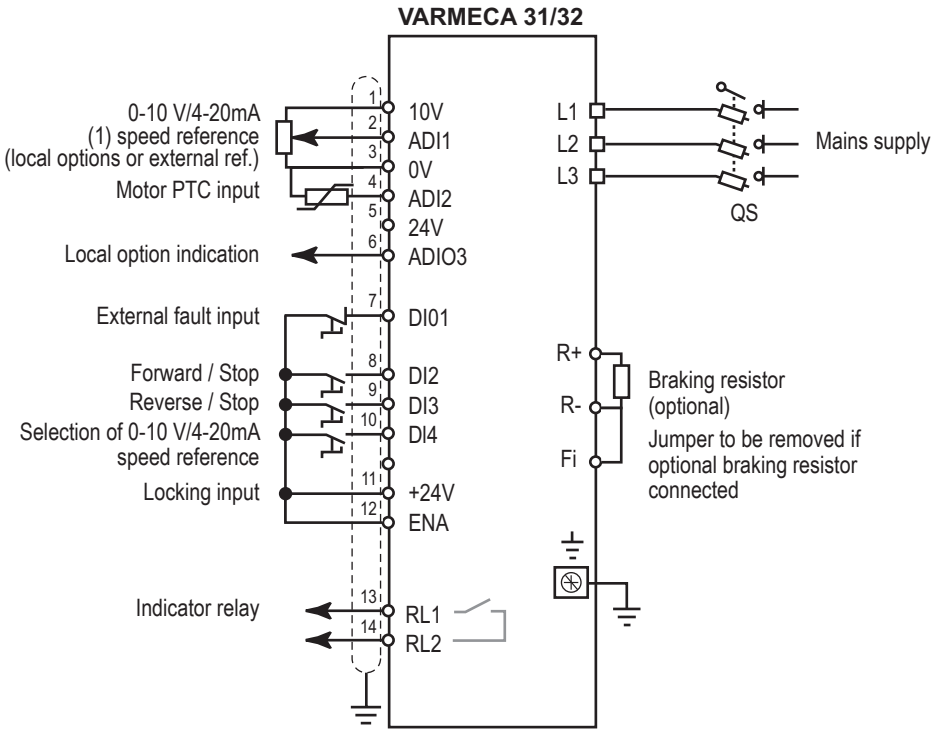


***Note :***
For single-phase versions, the power supply is connected to terminals L and N.

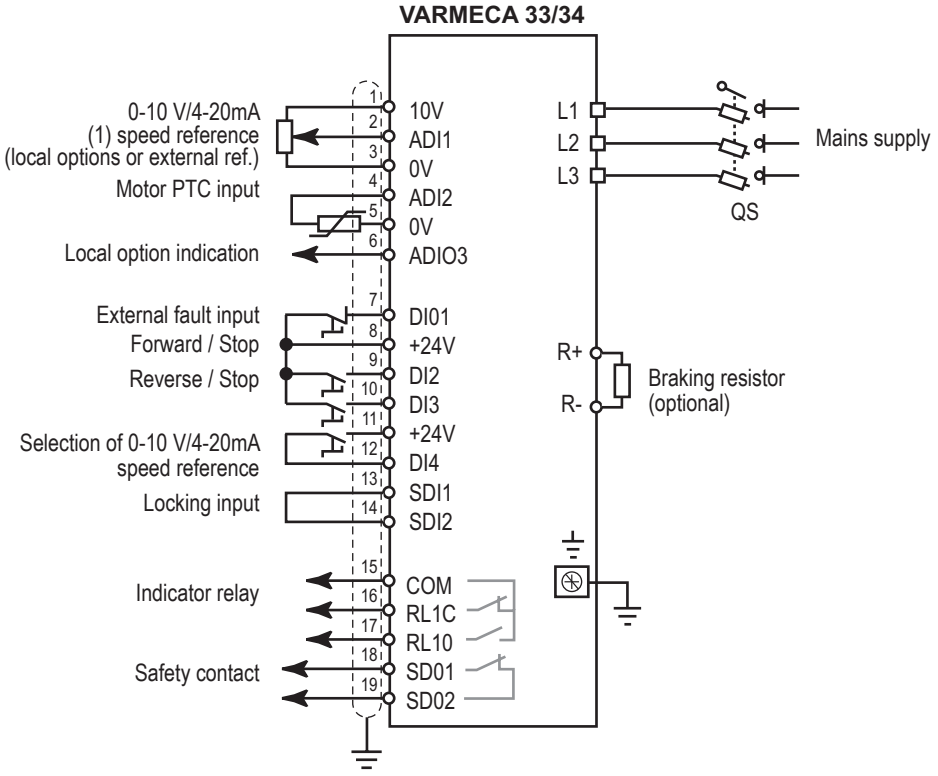


(1) if external potentiometer : resistance = 10 kΩ

## 3.5.2 - Connection diagram with safety input

### 3.5.2.1 - Safety input

This input, when opened, causes the drive to lock. Independent of the microprocessor, it acts on several levels of control from the power bridge. It is designed in such a way that even if one or more circuit components were to fail, the absence of torque on the motor shaft is guaranteed with a very high level of integrity.

This input is used to create a safety function using the principles of category 1 or 3 of standard EN954-1, depending on the application diagram.

The design of the «freewheel stop» function using input SDI2 has been evaluated by CETIM.

The results of this examination are recorded in report no. 732773/47A.

This built-in functionality enables the drive to act as substitute for a contactor in order to stop the motor in freewheel mode.

By using this safety input redundantly with another drive logic input, a diagram can be used which is capable of resisting a single fault. The drive will stop the motor in freewheel mode using two different control channels.

For correct use, the power connection diagrams described in the following paragraphs must be adhered to.

To unlock the drive and provide the safety function, safety input ENA (VMA 31/32) or SDI2 (VMA 33/34) must be connected to the +24V source (SDI1 for VMA 33/34).

This +24V source should be reserved exclusively for the safety input function (VMA33/34).

**• The safety input is a safety component which must be incorporated into the complete system dedicated to machine safety. As for any installation, the complete machine must be the subject of a risk analysis by the integrator which will determine the safety category with which the installation must comply.**

**• The safety input, when open, locks the drive, meaning the dynamic braking function is no longer available. If a braking function is required before the drive safety lock is applied, a time-delayed safety relay should be installed to activate locking automatically after the end of braking.**
**If braking needs to be a machine safety function, it should be provided by an electromechanical solution since the dynamic braking by the drive function is not considered to be a safety function.**

**• The safety input does not provide the electrical isolation function. Before any work is carried out, the power supply must be cut by an approved isolating device (isolator, switch, etc).**

**• The safety function is not enabled when the drive is controlled via the keypad or via a fieldbus.**

# VARMECA 30

## Variable speed motor or geared motor

**3.5.2.2 - 3-phase AC power supply in accordance with safety standard EN954-1 - category 1 with use of safety input**

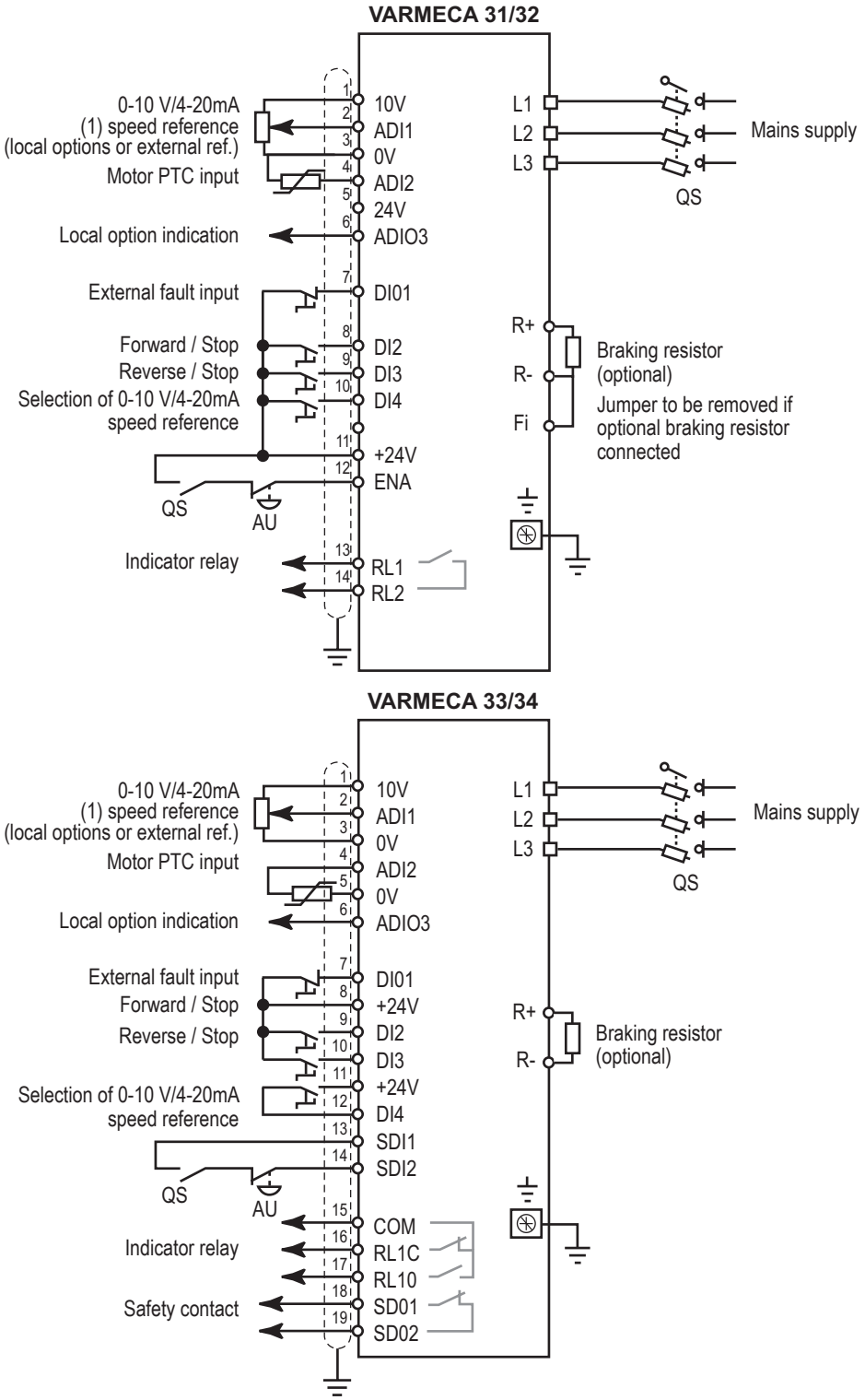


(1) if external potentiometer : resistance = 10 kΩ

***Note:***

For single-phase standards, the power supply is connected to terminals L and N.

QS: Fused isolator: QS must be opened before any intervention on the electrical parts of the drive or motor.

AU: Emergency stop button.

Optional braking resistor. Dissipates the active power returned by the motor onto the drive DC bus in the event of a driving machine.

Using the safety input means the motor can be stopped in freewheel mode without using a line contactor. The drive's internal principles are sufficiently safe to perform a stop using the safety input directly (category 1 of EN954-1).

# VARMECA 30

## Variable speed motor or geared motor

**3.5.2.3 - 3-phase AC power supply in accordance with safety standard EN954-1 - category 2 or 3 with use of safety input SDI2 redundantly with logic input DI2**

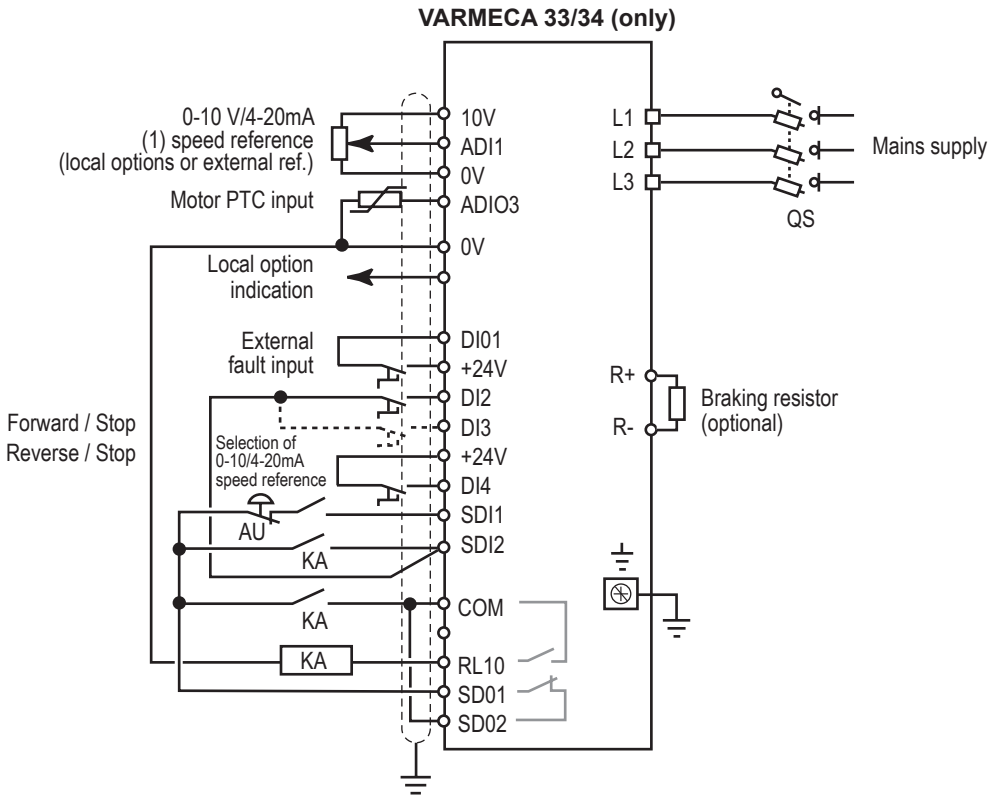


(1) if external potentiometer : resistance = 10 kΩ

QS: Fused isolator: QS must be opened before any intervention on the electrical parts of the drive or motor.
AU: Emergency stop button.
KA: Relays
Optional braking resistor. Dissipates the active power returned by the motor onto the drive DC bus in the event of a driving machine.

Using the safety input means the motor can be stopped in freewheel mode without using a line contactor. The drive's internal principles are sufficiently safe to perform a stop using the safety input directly (category 1 of EN954-1).
Duplication of the stop command on a logic input enables use of the internal drive redundancy to perform a freewheel stop (application of category 3 principles in accordance with EN954 for the part relating to the drive).

## 3.6 - Power supply and control for FCR brake motors

### 3.6.1 - Power supply for the built-in fixed control brake (SO VMA option) VMA 31/32 only

- The brake is supplied via the rectifier fixed on the SO VMA connection card. This connection is made at the factory.
- The rectifier is supplied by a mains phase and the motor star point.
- No parameters need to be set on the VARMECA.
- The brake is released as soon as the VARMECA run command is enabled. The brake is released after a stop command, at the end of the deceleration ramp or on disconnection of the power supply.

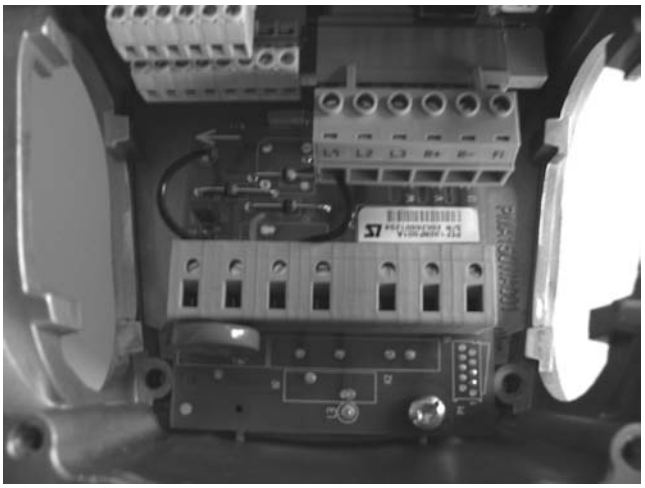

### 3.6.2 - Power supply for the built-in sequential control brake (ESFR VMA option)

- The brake is supplied via the rectifier and a solid state relay fixed on the ESFR VMA connection card. This connection is made at the factory.
- The rectifier is supplied by two mains phases.
- The brake is controlled according to a sequence which can be adjusted using the VARMECA parameters.

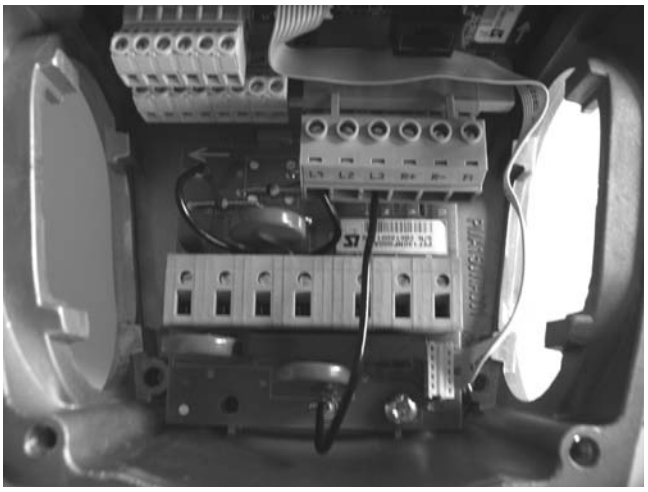

**Sequential brake control with ESFR option**

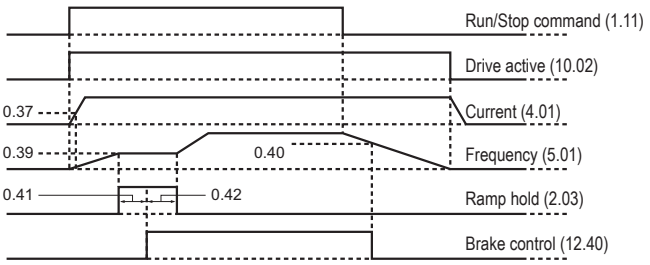


### 3.6.3 - Separate power supply

The brake is supplied and controlled by an external source.

en

## 3.7 - Rectified brake voltage according to the mains supply

| Mains | VMA rating | Power (kW) | FCR brake voltage | |
|---|---|---|---|---|
| | | | SO VMA option | ESFR VMA option |
| Single-phase power supply 208V -10% to 240V +10% | 31M-025 | 0.25 | NA | 180V DC |
| | 31M-037 | 0.37 | | |
| | 31M-055 | 0.55 | | |
| | 31M-075 | 0.75 | | |
| | 32M-090 | 0.9 | | |
| | 32M-110 | 1.1 | | |
| | 32M-150 | 1.5 | | |
| 3-phase power supply 208V -10% to 240V +10% | 31TL-025 | 0.25 | NA | 180V DC |
| | 31TL-037 | 0.37 | | |
| | 31TL-055 | 0.55 | | |
| | 31TL-075 | 0.75 | | |
| | 32TL-090 | 0.9 | | |
| | 32TL-110 | 1.1 | | |
| | 32TL-150 | 1.5 | | |
| | 32TL-180 | 1.8 | | |
| | 32TL-220 | 2.2 | | |
| 3-phase power supply 380V -10% to 480V +10% | 31T-025 | 0.25 | 120V DC | 180V DC |
| | 31T-037 | 0.37 | | |
| | 31T-055 | 0.55 | | |
| | 31T-075 | 0.75 | | |
| | 31T-090 | 0.9 | | |
| | 31T-110 | 1.1 | | |
| | 32T-150 | 1.5 | | |
| | 32T-180 | 1.8 | | |
| | 32T-220 | 2.2 | | |
| | 32T-300 | 3 | | |
| | 32T-400 | 4 | 100V DC | |
| 3-phase power supply 208V -10% to 40V +10% | 33TL-300 | 3 | NA | 100V DC |
| | 33TL-400 | 4 | | |
| | 34TL-550 | 5.5 | | |
| | 34TL-750 | 7.5 | | |
| 3-phase power supply 380V -10% to 480V +10% | 33T-550 | 5.5 | NA | 180V DC |
| | 33T-750 | 7.5 | | |
| | 34T-900 | 9 | | |
| | 34T-111 | 11 | | |

NA: Not available, provide a separate power supply.

## 3.8 - Example of supplying 2 motors with or without brake in parallel with a single VARMECA

### 3.8.1 - The VARMECA must be sized to take account of the total motor power rating

- The flange with 4 cable glands option must be used to make it easier to wire up the 2nd motor.

### 3.8.2 - The 2nd motor is designed to connect to the terminals marked U, V, W and PE on the SO VMA and ESFR VMA options for VMA 31/32 or on the 2nd motor option for VMA 33/34.

### 3.8.3 - Connecting the brake on the 2nd motor

**- With the SO VMA option**, the rectifier is supplied between the motor star point and a mains phase from the F1 terminal of the SO VMA 31/32 option.

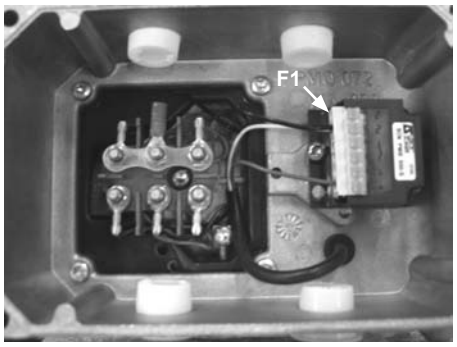


**F1 terminal of the SO VMA 31/32 option**

- **With the VMA ESFR option**, the rectifier is supplied between 2 mains phases and the solid state relay; connect it from the F1 and F2 terminals of the ESFR VMA 31/32 to the ESFR VMA 33/34.

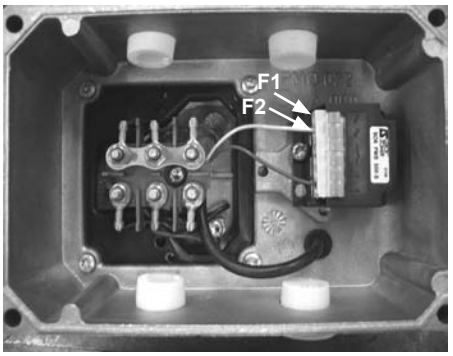


**F1 and F2 terminals of the ESFR VMA 31/32 option**

en

## 3.9 - Wiring diagrams for the SO VMA and ESFR VMA options

### 3.9.1 - Connection of the SO VMA 31/32 option

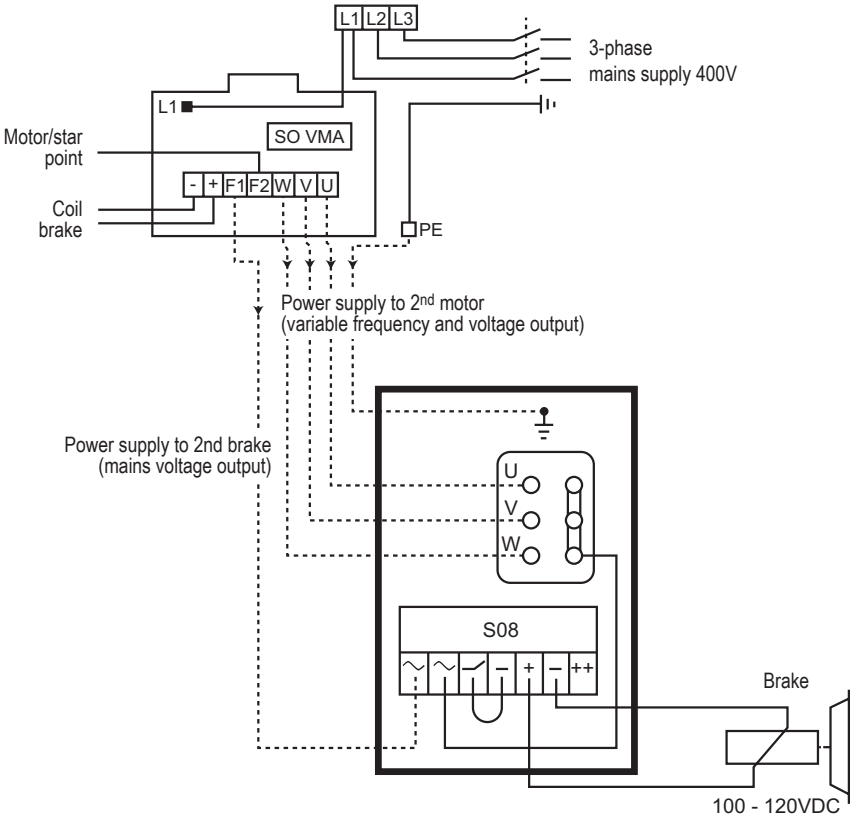


### 3.9.2 - Connection of the ESFR VMA 31/32 option

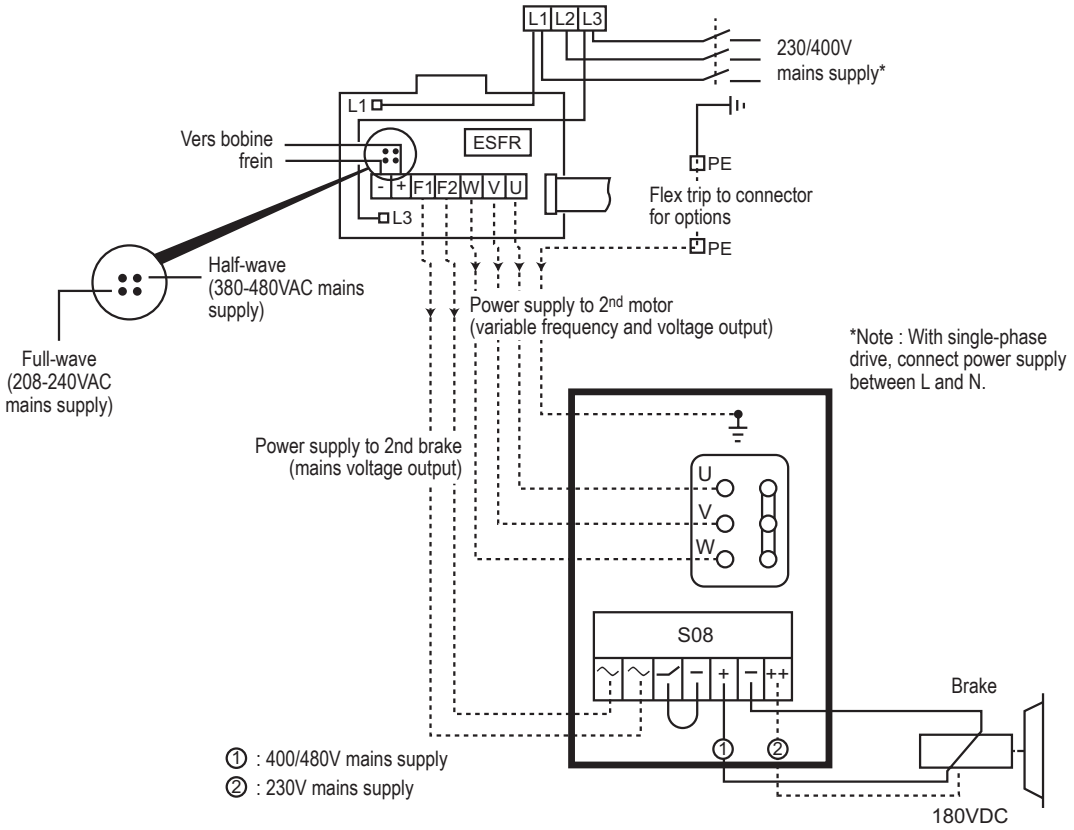

### 3.9.3 - Connection of the ESFR VMA 33/34 option

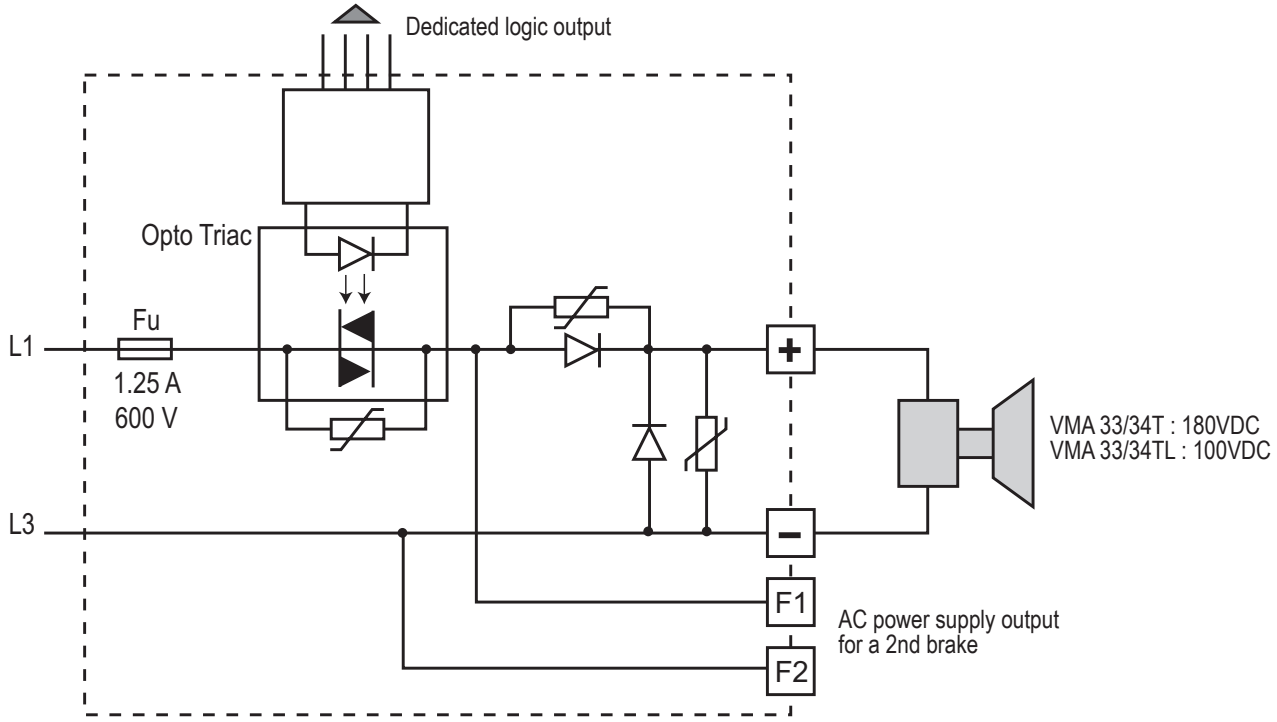


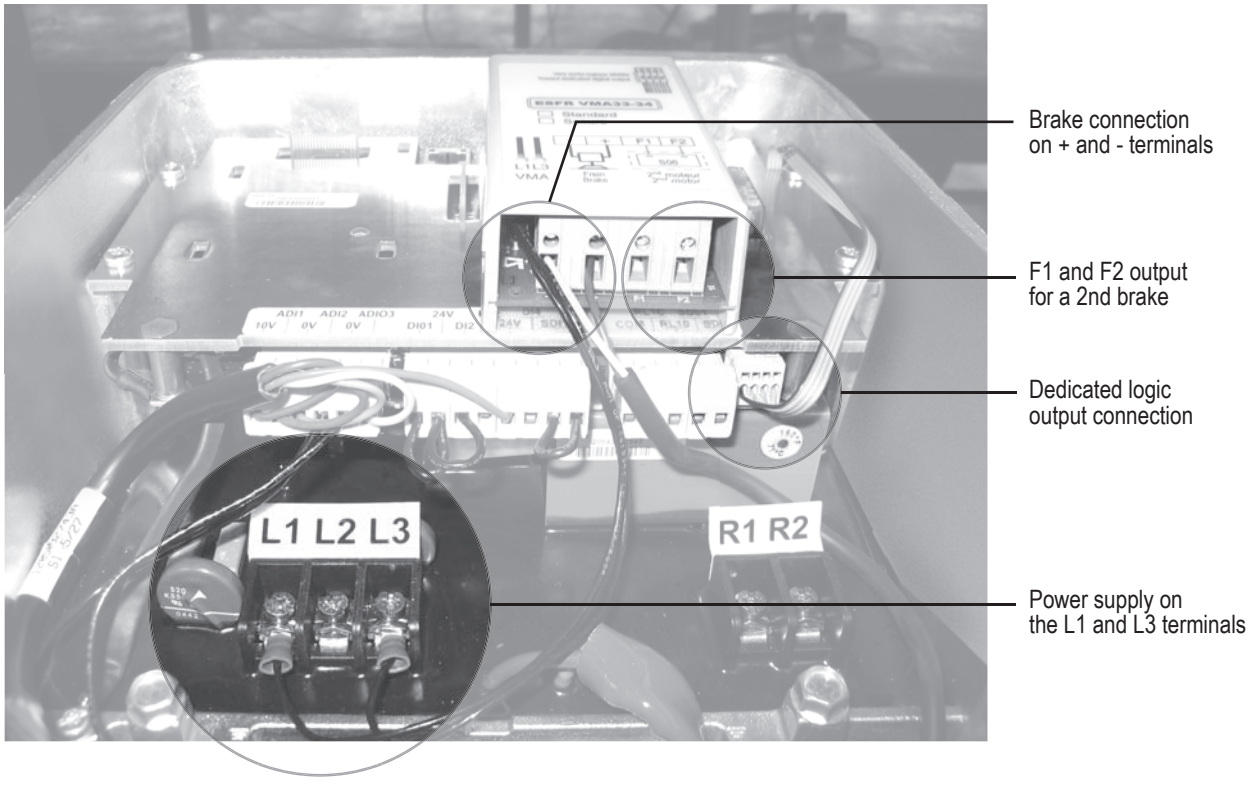

# 4 - COMMISSIONING

**• Before switching on the VARMECA 30, check that the electrical connections are correct, and that any moving parts are mechanically protected.**
**• For the safety of personnel, the VARMECA 30 must not be switched on with the protective cover removed.**

## 4.1 - Starting with the power supply

Since the run command has been factory-enabled via a jumper, the motor starts as soon as it is switched on.
The speed is adjusted with the local control knob (B 31/32 or B 33/34 option) or a remote reference (0-10 V or 4-20 mA).
Power-up: the green indicator lamp is lit continuously.
The control terminals SDI1 and SDI2 (VMA 33/34) or 11 and 12 (VMA 31/32) are linked (unlocking).

### 4.1.1 - Automatic starting

By leaving the wire between control terminals 8 and 11 (VMA 31/32) or DI2 and +24V (VMA 33/34), the motor starts running forward.

## 4.2 - Starting with remote volt-free contact

Once it has been switched on, the motor starts in accordance with the run command given by the closing of the volt-free contact corresponding to the desired direction of rotation.
The speed is adjusted with the local control knob (B 31/32 or B 33/34 option) or a remote reference (0-10 V or 4-20 mA).

## 4.3 - Starting with local run/stop control (BMA 31/32, BMA 33/34 or BMAVAR 31/32, BMAVAR 33/34 option

Once it has been switched on, the motor starts after the control knob corresponding to the desired direction of rotation has been pressed for one second.
The speed is only adjusted with the local control knob.

## 4.4 - Setting the speed

### 4.4.1 - External reference

Adjust the speed reference using the chosen reference (0/10 V or 4/20 mA).

### 4.4.2 - Control knob options (B 31/32 or B 33/34) and remote potentiometer option

Adjust the speed reference using the control knob or the 10 kΩ remote potentiometer.

### 4.4.3 - Internal speed control option (CVI VMA 31/32 or CVI VMA 33/34)

Adjust the speed reference using the Int. Spd. potentiometer.
Adjust the Max. Spd. or Min. Spd. potentiometers if it is not possible to reach the desired speed.

# 5 - FAULTS - DIAGNOSTICS

Information relating to the status of the VARMECA 30 is provided by two indicator lamps located on the local control options (B 31/32 or B 33/34, BMA 31/32 or BMA 33/34, BMAVAR 31/32 or BMAVAR 33/34, CVI VMA 31/32 or CVI VMA 33/34 options), or by the internal LED in VMA 31/32.

| Colour and state of indic. lamp | VARMECA status | Checks to be performed |
|---|---|---|
| Steady green | No trip<br>Mains present | |
| Flashing green | Current limiting | • Check that the motor is not overloaded or stalled |
| Flashing red | IGBT temperature alarm<br>Motor overload<br>Braking resistor option overload | • Check that air is able to circulate around the motor fins and VARMECA casing<br>• The motor is overloaded: check the motor current using a clamp ammeter<br>• Check that the deceleration ramp is long enough for applications with high inertia |
| Steady red | • Short-circuit of a motor winding<br>• Locked motor rotor<br>• Faulty insulation of a winding<br>• $I^2t$ overheating<br>• Internal fault<br>• Undervoltage<br>• Overvoltage | • Check that no incident has occurred<br>• Switch off and then on again to clear the fault.<br>• Check the mains voltage<br>• Check that the deceleration ramp is long enough for applications with high inertia<br>• If the fault remains, consult LEROY-SOMER |

The fault is cleared by switching off the VARMECA 30 or by opening/closing the connection between terminals 12: ENA and 11: +24 V (VMA 31/32) or SDI1 and SDI2 (VMA 33/34).

# 6 - MAINTENANCE

**⚠ • All work relating to installation, commissioning and maintenance must be carried out by experienced, qualified personnel.**

**• Before carrying out any work, disconnect and lock the VARMECA 30 power supply circuit and wait 2 minutes for the capacitors to discharge.**

## 6.1 - Care

No special care is required on the VARMECA 30, apart from the regular removal of dust from the fan grille and the cooling fins located at the bottom of the casing.
Do not dismantle the VARMECA 30 while it is still under guarantee, as this would then immediately become null and void.

**CAUTION:** Certain components which are sensitive to electrostatic discharge may be destroyed simply by touching them. Do not leave any metal object in the connection area, as this could cause a short-circuit.

## 6.2 - Measurements

### 6.2.1 - General

The input voltages can be measured using ordinary instruments.

The motor current IS NOT MEASURED ON THE VARMECA 30 POWER SUPPLY (L1, L2, L3).
It is measured using an ordinary clamp ammeter on one of the wires which goes into the motor terminal block.

### 6.2.2 - Procedure for measuring the motor current on VMA 31/32 (if the motor wire loop is inaccessible)

- Open the VARMECA 30 power supply circuit and lock it.
- Wait 2 minutes for the capacitors to discharge (for the single-phase range).
- Open the cover of the VARMECA 30.
- Open the connection between terminals SDI1 and SDI2 (VMA 33/34) or 11 and 12 (VMA 31/32).
- Remove the TORX + slot type screws from the protection plate above the motor terminals.
- Pass the longest motor wire along the side of the protection circuit.
- Replace the protection plate and fasten it.
- Pass the clamp ammeter through the motor wire loop.
- Remake the connection between terminals SDI1 and SDI2 (VMA 33/34) or 11 and 12 (VMA 31/32).

# VARMECA 30

## Variable speed motor or geared motor

# 7 - OPTIONS

## 7.1 - Speed control knob (B 31/32 or B 33/34)

The speed is set using a knob with graduations from 15 to 100%.
• With 2 indicator lamps.
• Connected on the P2 connector (VMA 31/32) or directly on the control terminals (VMA 33/34).

## 7.2 - Control knob with integrated run-stop control (BMA 31/32 or BMA 33/34)

In addition to speed control, a run button and a stop button make it possible to control the VARMECA 30 locally, once it has been switched on, as required. For a run command to be taken into account, **the button must be held down for one second**.
• With 2 indicator lamps.
• Connected on the P2 connector (VMA 31/32) or directly on the control terminals (VMA 33/34).
• Do not wire the shunt between terminals 8-11 and/or 9-11 (VMA 31/32).

## 7.3 - Control knob with forward/reverse/stop control (BMAVAR 31/32 or BMAVAR 33/34)

In addition to speed control, a forward button, a reverse button and a stop button make it possible to control the VARMECA 30 locally, once it has been switched on, as required. For a run command to be taken into account, the button must be held down for one second.
• With 2 indicator lamps.
• Connected on the P2 connector (VMA 31/32) or directly on the control terminals (VMA 33/34).
• Do not wire the shunt between terminals 8-11 and/or 9-11 (VMA 31/32).

## 7.4 - Internal speed control (CVI VMA 31/32 or CVI VMA 33/34)

The speeds are set on potentiometers which are accessible once the cover has been removed.
① Min.Spd potentiometer: calibration of the minimum speed.
② Int.Spd potentiometer: speed control which replaces control via the control knob.
③ Max.Spd potentiometer: calibration of the maximum speed.
There are also 2 indicator lamps.

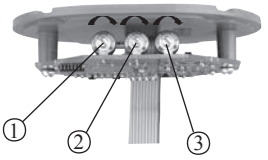


**Note :** With this option, do not wire up terminal ADI1.

# VARMECA 30

## Variable speed motor or geared motor

## 7.5 - IP 20 braking resistor (RF100 – RF200 – RF600)

For operation in 4 quadrants and energy dissipation, resistors can be fixed directly onto the VARMECA casing. **In this case, the jumper between terminals FI and R- should be removed (VMA 31 and 32).**

| | RF 100 | | | RF 200 | | |
|---|---|---|---|---|---|---|
| | P peak kW | P thermal kW | Value Ω | P peak kW | P thermal kW | Value Ω |
| VMA 31T/TL | 3.2 | 0.1 | 200 | 3.2 | 0.2 | 200 (2x100 in series) |
| VMA 31M | 0.8 | | | 0.8 | | |
| VMA 32T/TL | 3.2 | | | 3.2 | | |
| VMA 32M | 0.8 | | | 0.8 | | |
| | RF 600 | | | | | |
| | P peak kW | P thermal kW | Value Ω | | | |
| VMA 33/34T/TL | 12.8 | 0.6 | 50 : (2x100 in parallel) | | | |

External resistors with greater thermal power can be used, provided that the minimum ohmic value of 180 Ω (RF 100 – RF 200) or 50 Ω (RF 600) is respected.

## 7.6 - IP 20 external braking resistor (RF - BRR - 800 - 200)

| | P peak kW | P thermal kW | Ω value |
|---|---|---|---|
| VMA 31/32T-TL | 3.2 | 0.8 | 200 |
| VMA 31/32M | 0.8 | | |

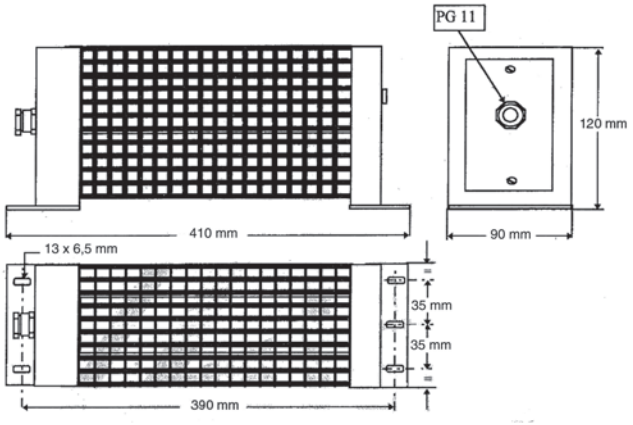


## 7.7 - Power supply and electromechanical brake control (SO VMA 31/32)

he motor must be fitted with an FCR brake adapted for the VARMECA 31/32. The brake has a built-in power supply. The brake is released as soon as the run command is enabled. The brake is engaged after a stop command, at the end of the deceleration ramp or on disconnection of the power supply.

## 7.8 - Power supply and sequential brake control (ESFR VMA 31/32)

The brake has a built-in power supply. The brake is controlled according to a sequence which can be adjusted using the VARMECA parameters.

## 7.9 - Power supply and sequential brake control (ESFR VMA 33/34)

The brake has a built-in power supply. The brake is controlled according to a sequence which can be adjusted using the VARMECA parameters. See VARMECA 30 parameter-setting manual.

## 7.10 - Fieldbus (not available for VMA32 M)

The interface card is mounted inside the VARMECA casing.

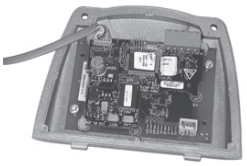

**Protocols supported :**
VMA 31/32 : PROFIBUS DP
VMA 33/34 : PROFIBUS DP - INTERBUS S
DEVICENET - CAN OPEN

## 7.11 - Encoder feedback (COD VMA 33/34)

VMA 33/34 only. The option is mounted inside the VMA33/34 box on the support plate. It allows the operation of the closed loop control using an incremental encoder or Hall effect sensor.

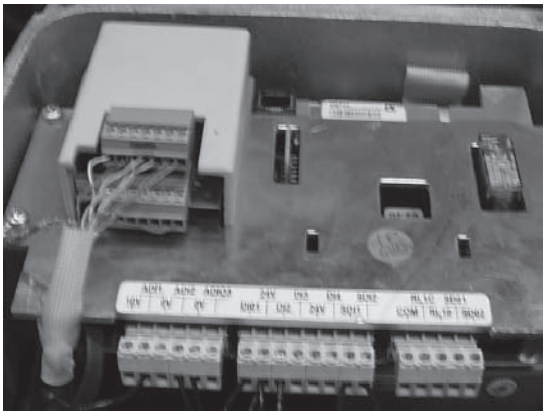

# VARMECA 30

## Variable speed motor or geared motor

## 7.12 - Parameter-setting console (PX LCD)

The console option provides access to the drive internal settings (terminal block configuration, ramp, speed and PI settings, etc).
See VARMECA 30 parameter-setting manual.
**Description of the option:**
1 PX LCD console, 1 cable L = 3 m

**PX LCD** parameter-setting console

## 7.13 - Parameter-setting software (VMA SOFT)

This option provides access to the drive internal settings from a PC. The software is compatible with WINDOWS 95, 98, NT, 2000, XP and subsequent versions.
See VARMECA 30 parameter-setting manual.
**Description of the option:**
1 cable L = 1.5 m
The software can be downloaded directly from the Web : www.leroysomer.com.

## 7.14 - Operator display (PAD VMA 30)

**Presentation of the operator display :**
The PADVMA30 operator display consists of a display unit, three control buttons and three parameter-setting keys.

| Ref. | Function |
|---|---|
| A | Display comprising 4 x 7-segment digits for indicating:<br>- the drive operating status<br>- certain operating data<br>- the adjustment parameters (**01** to **80**) and their value. |
| B | LED providing a sign for the data (the lit LED corresponds to the «-» sign). |
| C | Keys which can be used to scroll up and down through the parameters or their value. These keys can also be used to vary the speed. |
| D | Keys which can be used to switch from standard mode to parameter-setting mode.<br>In parameter-setting mode, the parameter number and value are displayed alternately on the display. |
| E<br>F<br>G | In keypad mode, these buttons are used for the following commands:<br>- reverse,<br>- stop, clear fault,<br>- forward. |

The parameter setting to use the PAD VMA30 is described in the Parameter setting document 3847.

## 7.15 - XPress Key (PX Key)

### 7.15.1 - General

The XPress Key option is used to save a copy of all the VARMECA 30 parameters so that they can be duplicated very simply in another drive.

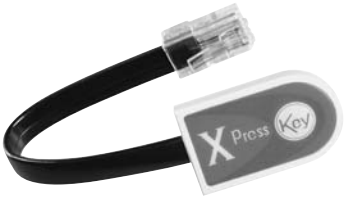


### 7.15.2 - Setting drive parameters with XPress Key

• Connect XPress Key to the serial port via a RJ45 connector.
• With the drive locked, press the «Key» button for a first time.
Confirm the transfer of parameters into the drive by pressing the «Key» button a second time.

**CAUTION: If confirmation is not received within 10 seconds, the procedure is cancelled.**

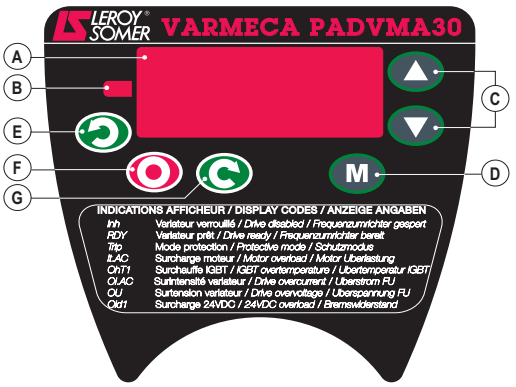

# VARMECA 30

## Variable speed motor or geared motor

## 7.16 - EMC filter for VMA33/34

VARMECA 33/34 drives conform to drive standard EN 61800-3 because of the EMC filter which can be integrated in the front of the VARMECA 30 casing.

### 7.16.1 - Dimensions

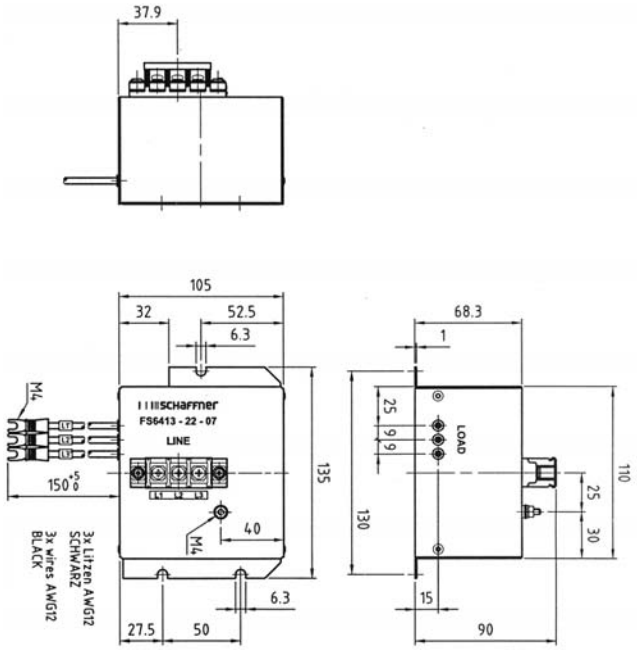


### 7.16.2 - Connection

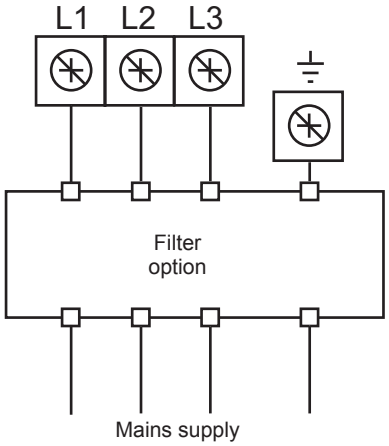


## 7.17 - EMC filter for VMA31M/32M

The filter (FLT VMA31-32M 110) is internally mounted up to power rating 1.1 kW.
For the power 1.5kW, the filter is externally mounted, on the rear of the case.
The Varmeca then conforms to the EN 61000-6-4 and EN 61000-6-3 standards.

## 7.18 - EMC filter for VMA31T/32T

The filter (FLT VMA 31-32T) is externally mounted, on the rear of the case.
The Varmeca then conforms to the EN 61000-6-3 standard.

**Internal filter for the single phase range**

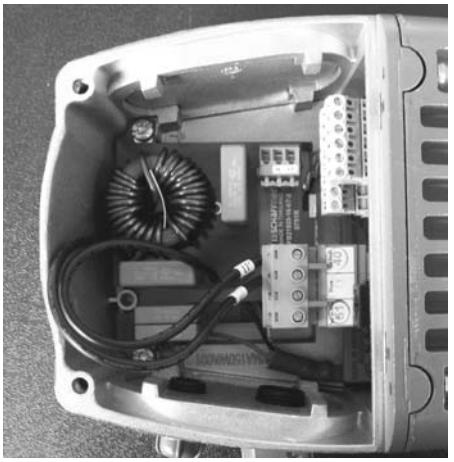

**External filter**

en

**NOTES**

MOTEURS LEROY-SOMER 16015 ANGOULÊME CEDEX - FRANCE

RCS ANGOULÊME N° B 671 820 223
S.A. au capital de 62 779 000 €

*http://www.leroy-somer.com*

Voir documents suivants. Siehe folgende Dokumente. See following documents



Professional Milling and Handling of Powders

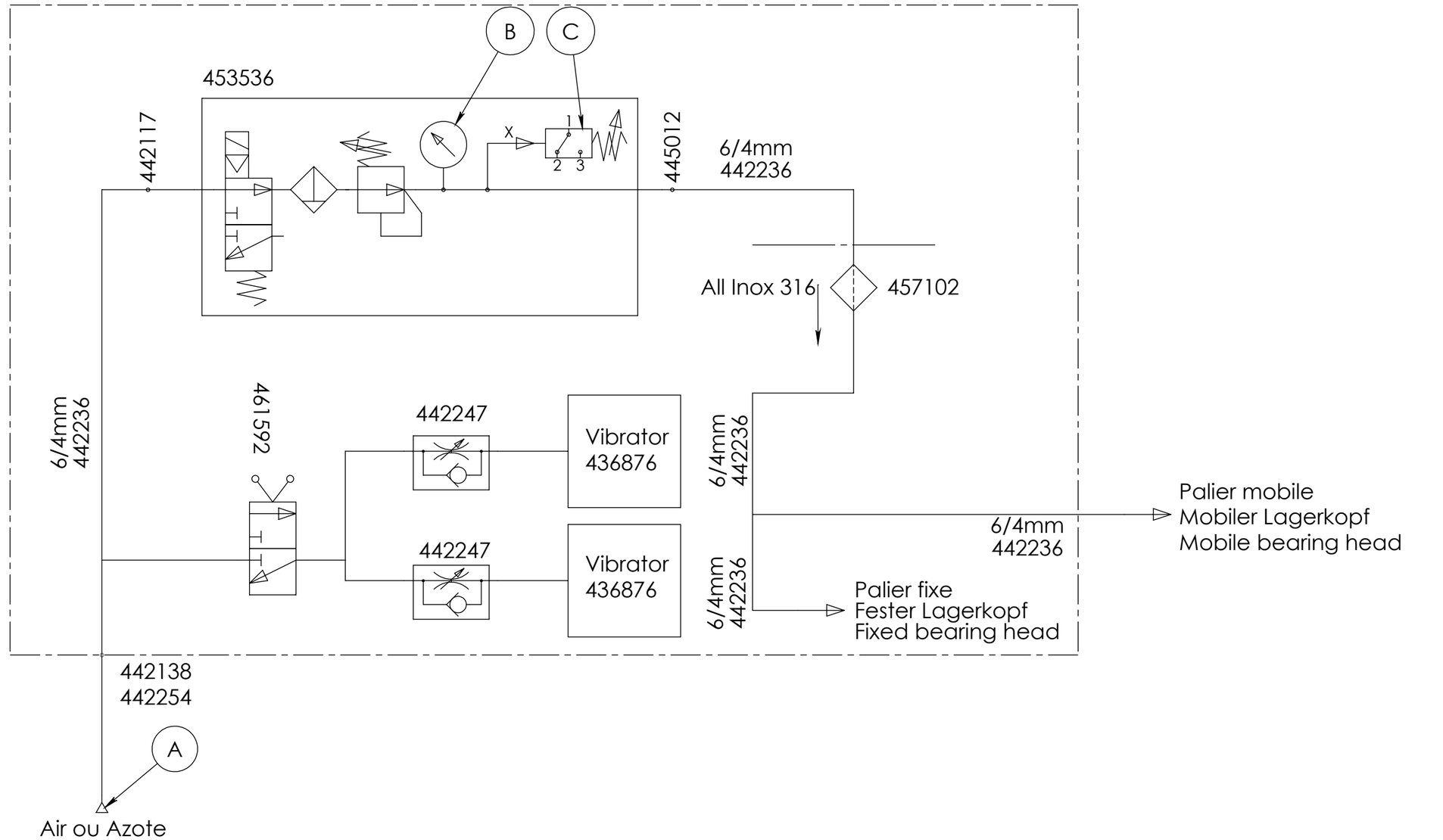


| Type / Typ / Type | Référence / Referenz / Reference | Pression / Druck / Pressure |
|---|---|---|
| MF | A | min. 3 barg |
| | B | 1.2 barg |
| | C | 0.8 barg |

| Dimensions without tolerance [mm] | above | | 6 | 30 | 120 | 400 | 1000 |
|---|---|---|---|---|---|---|---|
| | up to | 6 | 30 | 120 | 400 | 1000 | 2000 |
| Machining: ISO 2768-m | | ±0.10 | ±0.20 | ±0.30 | ±0.50 | ±0.80 | ±1.20 |
| Welding Assembly: ISO 2768-c | | ±0.30 | ±0.50 | ±0.80 | ±1.20 | ±2.00 | ±3.00 |

Schéma pneumatique ATEX

MATERIAL :

| Scale | Similar | Designed | 03/08/2010 | ygr |
|---|---|---|---|---|
| % | | Controlled | 01/09/2011 | ygr |
| Weight [kg] | | Revised | 01/09/2011 | ygr |
| A3 | | Atex | | |

Any and all information received by you from us shall be held and kept confidential and shall not be disclosed by you to any third party except with prior written consent of FREWITT SA.

Frewitt SA: Milling and Handling of Powders
P.O.B. 615, CH-1701 Fribourg, SWITZERLAND
tel: +41 26 460 74 00 / fax: +41 26 460 74 01
info@frewitt.com / www.frewitt.com

461598-SCH

| Page | Ver. |
|---|---|
| 1/1 | B |

## Pneumatics 461598_B

| Article N°<br>Artikel Nr.<br>Article ID. | Description<br>Beschreibung<br>Description | Quantité<br>Menge<br>Quantity | Unité<br>Einheit<br>Unit | No Dessin<br>Zeichnungs-Nr<br>Drawing ID |
|---|---|---|---|---|
| . 442037 | Cable bulkhead CL.QS QSS-6, 153158 | 1.0000 | Pce | 461598 |
| . 442043 | Push-in-T-connector QST-B-6-20 | 1.0000 | Pce | 461598 |
| . 442117 | Bent connector | 1.0000 | Pce | 461598 |
| . 442138 | Crossbar CL. | 1.0000 | Pce | 461598 |
| . 442254 | Cap B-1/4 | 1.0000 | Pce | 461598 |
| . 445012 | Push-in L-fitting QLS-B-1/4-4, 130929 | 1.0000 | Pce | 461598 |
| . 453536 | Preparation unit ATEX 2GD | 1.0000 | Pce | 461598 |
| . 457232 | Clip 68-73,1/2p-M10, V4A, Debrunner, 560.107.200 | 1.0000 | Pce | 461598 |
| . 461592 | Valve MV 48 06 06 MB 3 | 1.0000 | Pce | 461598 |
| . 436876 | Pneumatic Piston Vibrator NTP25B+C SE Inox, Netter, zone 2G/2D, IP65, T4 | 2.0000 | Pce | 461598 |
| . 457102 | Filter inox FDA 0.2 µm G1/4 1.4404 (Off.3169-10-01) | 1.0000 | Pce | 461598 |
| . 442247 | One-way flow control valve GR-QS-8, 193970 | 2.0000 | Pce | 461598 |

Voir documents suivants. Siehe folgende Dokumente. See following documents

Professional Milling and Handling of Powders

Doc No: 114571-1

Donaldson
Ultrafilter

# P-EG
# (single / multiple)

DE
GB
FR
NL
IT
ES
PT
DK
SE
FI
GR

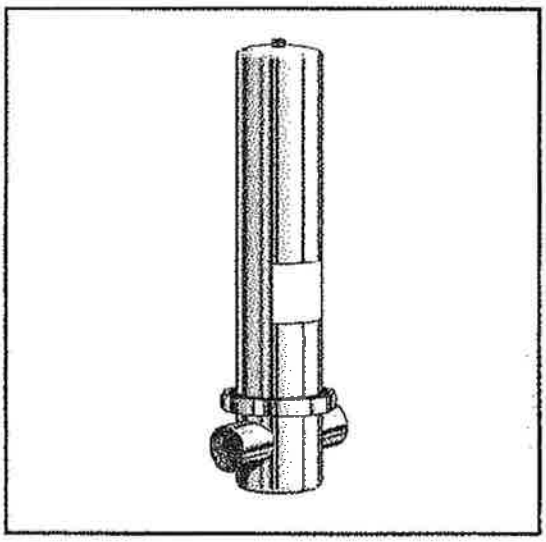

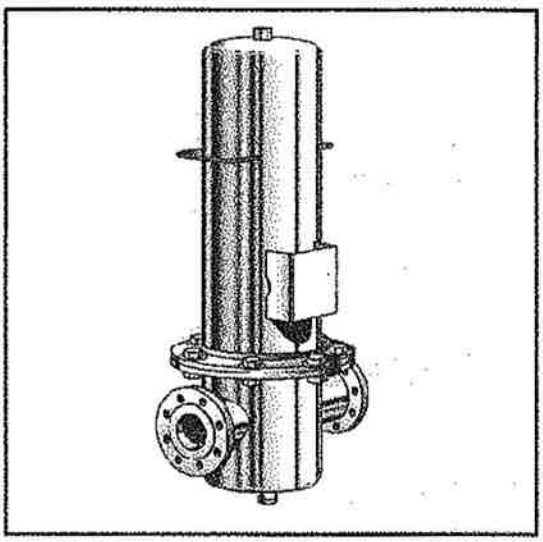

Doc No: 114571-1

CE

Donaldson

**Technical alterations reserved!**

Technische Änderungen vorbehalten • Sous réserve de modifications technicques • Technische gereserveerde wijzigingen • Alterazioni tecniche riservate • Alteraciones técnicas reservadas • As alterações técnicas reservaram • Ret til tekniske ændringer forbeholdes • Reserverade tekniska förändringar • Oikeudet teknisiin muutoksiin pidätetään • Αλλαγές που διατηρούνται τεχνικές • Technické změny vyhrazeny • Jätame endale õiguse teha tehnilisi muudatusi • Műszaki módosítások joga fenntartva • Pasiliekame teisę daryti techninio pobūdžio pakeitimų • Lespējamas tehniskas izmaiņas • Zmiany techniczne zastrzeżone • Tehnične spremembe pridržane • Technické zmeny vyhradené • Ne rezervăm dreptul de a efectua modificări tehnice • Запазваме си правото на технически промени • Teknik değişiklikler saklı tutulur • Det tas forbehold om tekniske endringer • Право на технические изменения сохраняется

Donaldson®

*Filtration Solutions*

Donaldson Filtration Deutschland GmbH
Industrial Filtration Solutions
Büssingstrasse 1
D-42781 Haan, Germany

Tel +49 (0) 2129-569-0
Fax +49 (0) 2129-569-100
Email: IFS-de@donaldson.com
Internet: www.donaldson.com

892211/R03/2009/01

## P-EG
## (single)

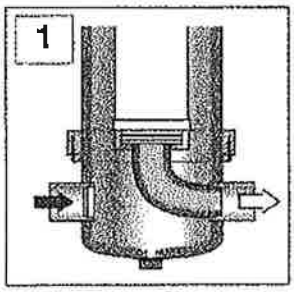


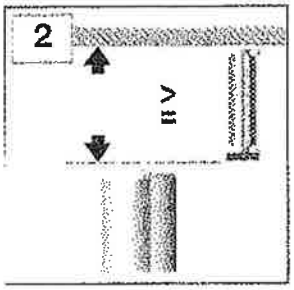


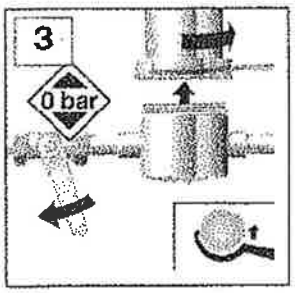


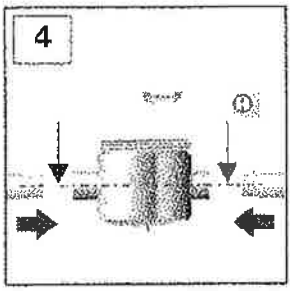

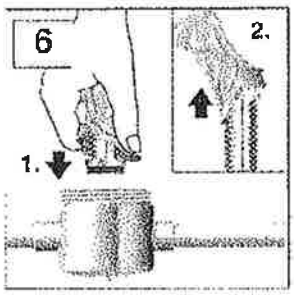


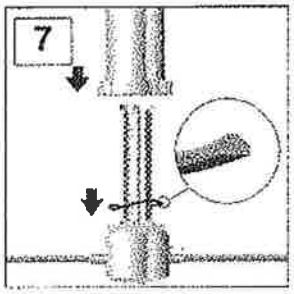


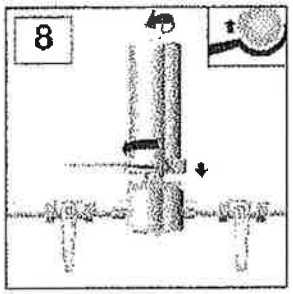


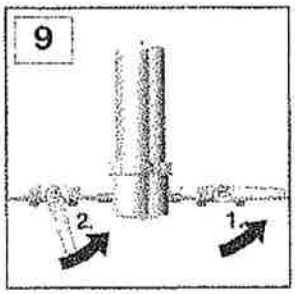


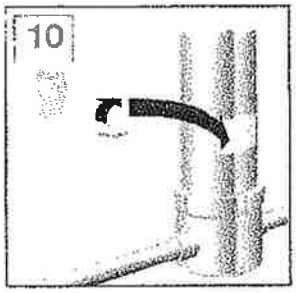

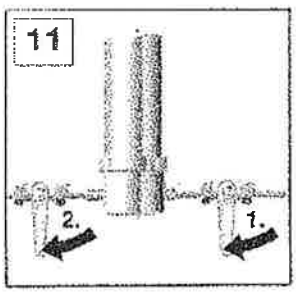


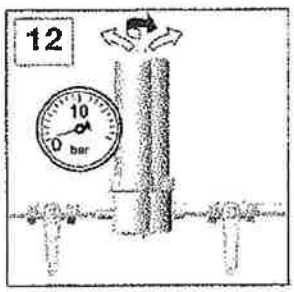


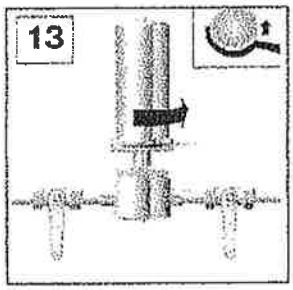


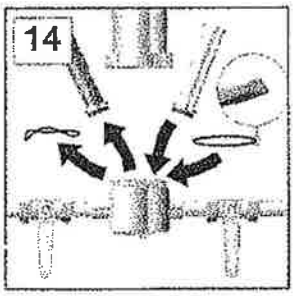


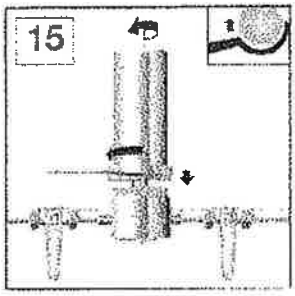


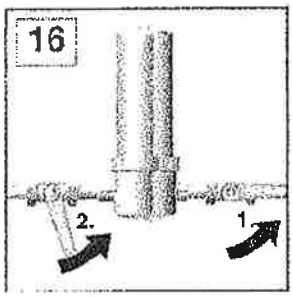

# P-EG
# (multiple)

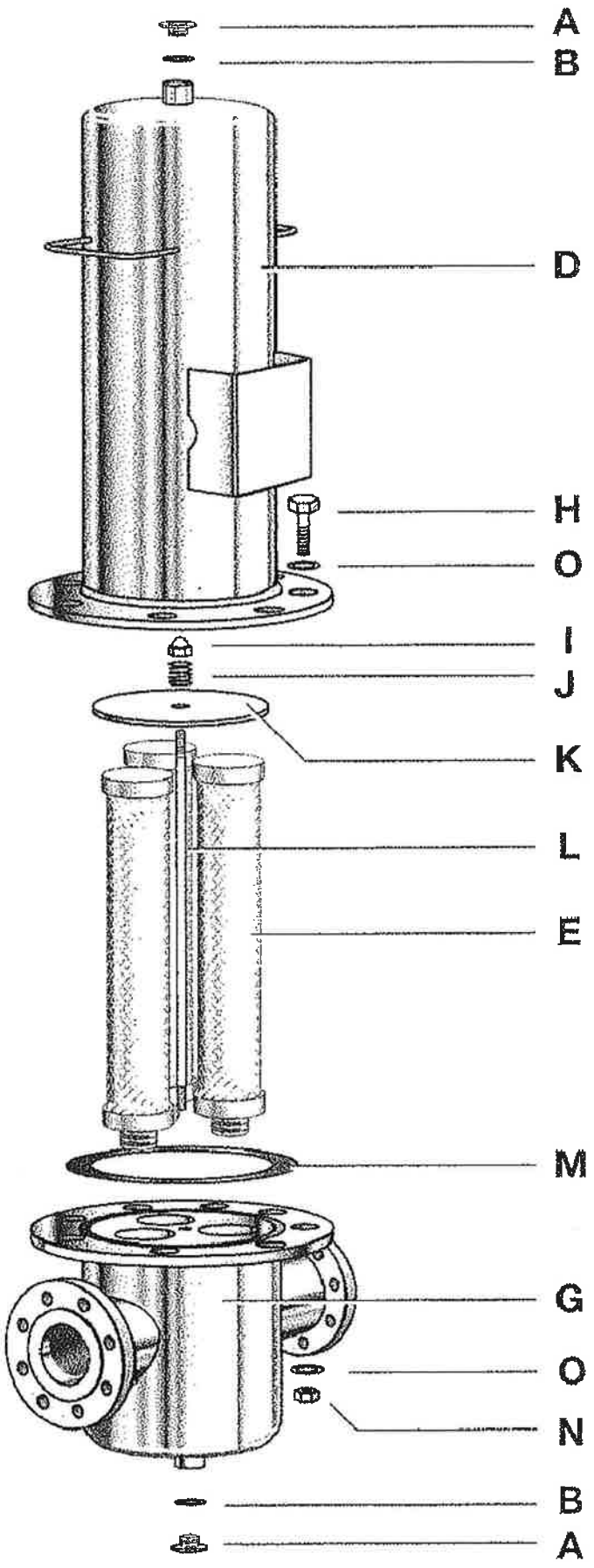

# P-EG (single)

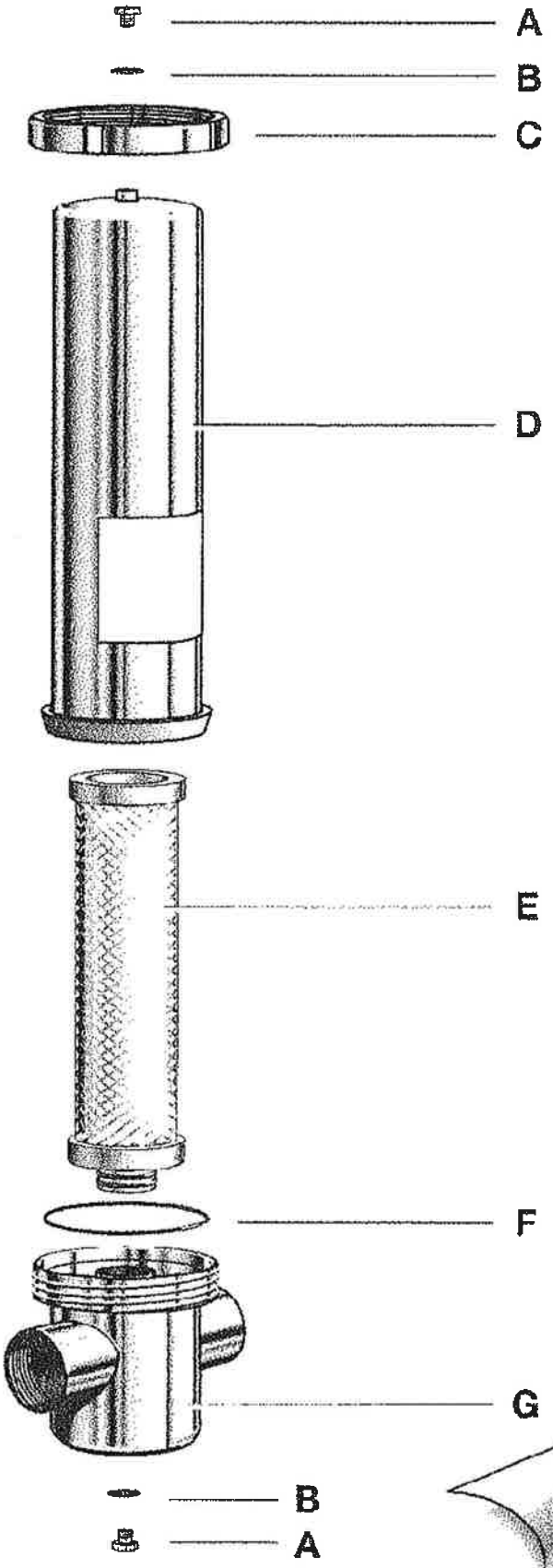

## P-EG (multiple)

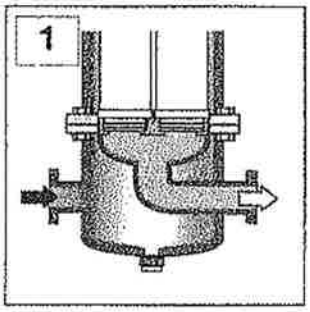


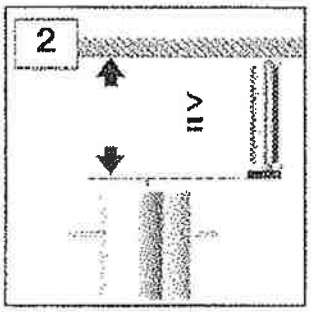

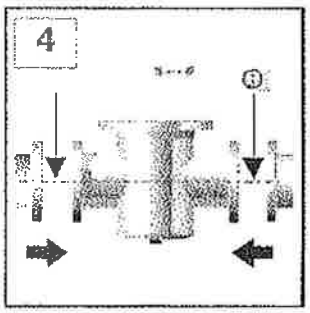

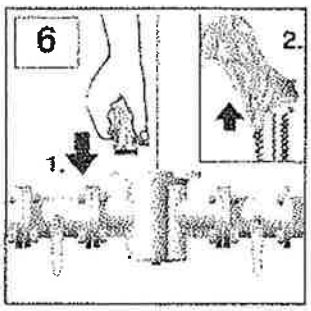


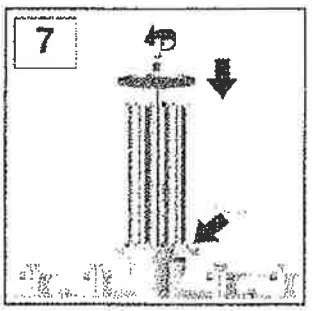


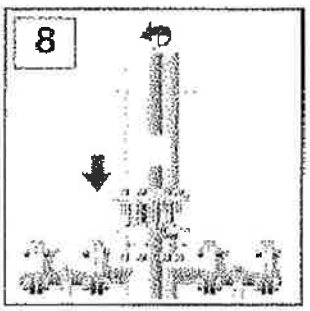


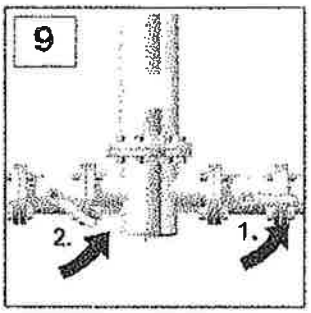


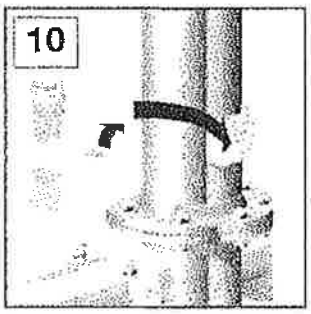

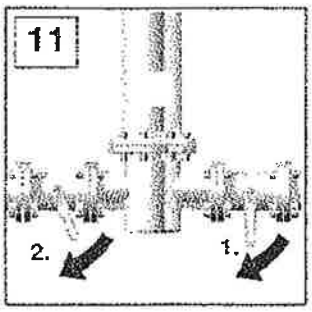


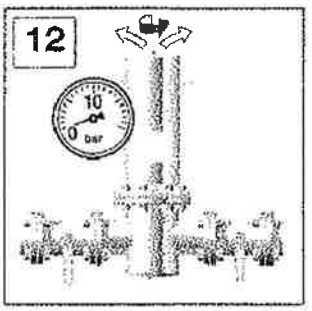


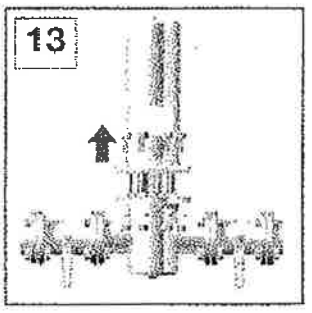


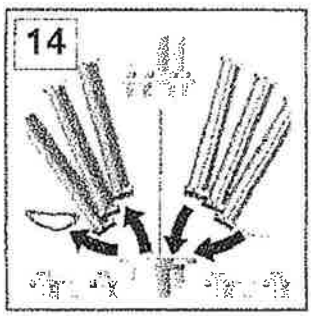


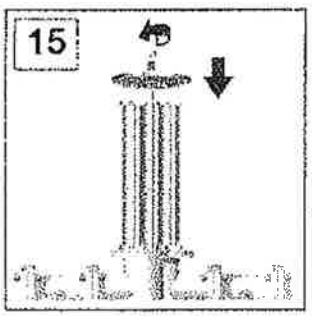


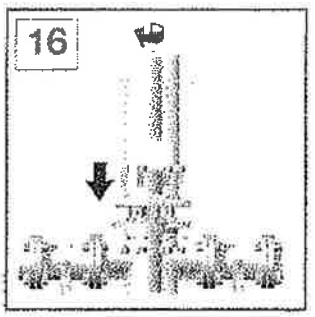

## Functional elements

P-EG

A Plug
B Gasket
C Screw locking ring
D Upper housing bowl
E Filter element(s)
F Sealing ring
G Lower housing bowl
H Hexagonal screw
I Tension nut
J Spring
K Bracket plate
L Tie rod
M Gasket
N Hexagonal nut
O Washer

## For your safety

The relevant safety at work and accident prevention regulations, plus the operating instructions, shall apply for operation of the pressure vessel. The pressure vessel has been constructed in accordance with the generally recognized rules of engineering. It complies with the requirements of directive 97/23/EC concerning pressure vessels.

The relevant applicable national regulations in force at the place of installation concerning the operation and routine testing of pressure vessels must be complied with.

You as operator / user of the unit should make yourself familiar with the function, installation and start-up of the unit through these operating instructions.

It is essential that you follow these safety notes and this information in order to ensure trouble-free operation of the unit.

All the safety information is always intended to ensure your personal safety!

- The max. working pressure and the max. permissible working temperature of the pressure vessel are detailed on the type plate.
  The permissible working temperatures for filter elements are given under Technical data in these instructions.
- Ensure that the permitted operational temperatures are complied with, regardless of the ambient temperatures prevailing at the place of installation.
- It is necessary to ensure that the unit is equipped with the corresponding safety and test devices to prevent the permissible operating parameters from being exceeded.
- The pressure vessel must be at a safe distance of min. 5 m to prevent heating up in the event of a fire.
- The pressure vessel has been designed for a primarily static pressure loading with a maximum of 1000 cycles to and from the full load. Rapid changes of load with more than 10% of the max. working pressure are not allowed.
- Ensure that the pressure vessel is not subjected to vibrations that could cause fatigue fractures.
- The pressure vessel is not to be subjected to stresses arising from traffic, wind and earthquakes.
- The medium used may not have any corrosive components that could attack the materials of the pressure vessel in a way that is not permitted.
- All installation and maintenance work on the pressure vessel may only be carried out by trained and experienced specialists.

- ❑ It is forbidden to carry out any kind of work on the pressure vessel and piping, this covering welding and constructional changes, etc. Breaking this rule means extreme danger for you and your colleagues.
- ❑ Attention! If the pressure vessel is operated at temperatures over 60°C, suitable protection to prevent contact must be provided.
- ❑ A pressure gauge that shows the operational pressure must be installed in the unit.
- ❑ Depressurize the system before carrying out any work on the pressure vessel.
- ❑ Clean the piping before carrying out the installation work.
- ❑ The unit must be installed vertically in the piping.
- ❑ Ensure that the pressure vessel is installed without any stresses.
- ❑ Disconnect the power supply when carrying out electrical work.

## Appropriate use

The equipment may only be used for its intended purpose. The equipment has been built exclusively:

- ❑ For operating media of **group 2** as per Pressure Equipment Directive 97/23/EC.
- ❑ To separate out microbiological organisms so as to produce 100% sterile compressed air.
- ❑ For the filtration of saturated steam.

Any other form of use or one going beyond this shall be considered as inappropriate. We shall have no liability whatsoever for any damage incurred as a result!

## Notes on starting up

**PICTURES 1 - 10 (single)**

**PICTURES 1 - 10 (multiple)**

**Before initial commissioning**

- ❑ The filter elements are not already installed in the state in which they are supplied!
- ❑ All the screwed connections of the pressure vessel must be done up to the required and max. permissible tightening torques for the screws and bolts.
- ❑ Make a visual check! There must be no external damage visible.
- ❑ Make a check for leaks!

**Initial commissioning**

- ❑ **Slowly** apply pressure to the system by first opening the downstream valve **(9)**.

## Information concerning maintenance

**PICTURES 11 - 16 (single)**
**PICTURES 11 - 17 (multiple)**

- Before starting any maintenance work, ensure that the pressure vessel has been depressurized and has cooled down, and cannot be put back into operation during the maintenance work.
- The filter elements must be changed at regular intervals. At the latest, once the permissible differential pressure has been reached!

  The following recommendations apply:

  **P-GS**

  Depending on wear, after 6 months at the latest.

  Regeneration with ultrasonic is possible.

  **P-SRF / P-BE**

  The life of the filter elements depends on the one hand on the quality of the prefiltration, and on the overall conditions of the steam and sterile filtration on the other hand. The user must ensure through carrying out sterilisation tests at adequately short intervals that it is possible to detect a dropping off in the performance of the filter in good time.
- Damaged components are to be replaced by new ones. If a marked degree of damage is found, the entire vessel is to be replaced.
- The pressure vessel has been designed for a life of 10 years.
- The sealing ring of the housing or the gasket respectively must also be changed when changing a filter **(14)**.
- Carry out a check for leaks once the maintenance work has been finished!

## Protection of the environment

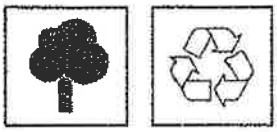

- The packing material and the unit itself and its accessories are produced from recyclable materials.
- Separating the remaining materials in an appropriate way helps in the recycling of materials.
- Used filter elements can be returned to the manufacturer.

## Spare parts

Sealing ring (single)
DIN 11851

Gasket (multiple)
DIN 2690

Filter elements

Please always quote the type designation on your housing when making orders for spare parts.

## Accessories

Manual drain (single)

Screw-in flange (single)
max. 10 bar

C-spanner (single)

Please always quote the type designation on your housing when making orders for accessory parts.

## Technical data

**P-EG (single)**

Max. working pressure PS: 16 bar

Type 288: 12 bar

Design temperature of housing: -200°C/+200°C

Permissible working temperature of housing with EPDM seal (standard)*: - 25°C/+150°C

**P-EG (multiple)**

Max. working pressure PS: 10 bar

Design temperature of housing: -200°C/+200°C

Permissible working temperature of housing with standard gasket*: - 25°C/+150°C

* Other seal materials on request.

**Filter elements**

Permissible working temperature:

P-GS [1] max. 150° C

P-SRF max. 200° C

P-BE max. 200° C

[1] > 150°C with welded end caps

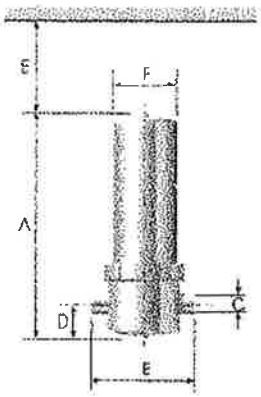


| Type | A mm | B mm | C* | D | E mm | ø mm | Elements |
|---|---|---|---|---|---|---|---|
| 0006 | 215 | 108 | R 1/4" | 55 | 90 | 70 | 03/10 |
| 0009 | 245 | 108 | R 3/8" | 55 | 90 | 70 | 04/10 |
| 0012 | 245 | 108 | R 1/2" | 55 | 120 | 70 | 04/20 |
| 0018 | 270 | 125 | R 3/4" | 65 | 150 | 70 | 05/20 |
| 0027 | 300 | 125 | R 1" | 75 | 150 | 85 | 05/25 |
| 0036 | 350 | 140 | R 1 1/4" | 75 | 200 | 85 | 07/25 |
| 0048 | 380 | 170 | R 1 1/2" | 80 | 200 | 104 | 07/30 |
| 0072 | 455 | 170 | R 2" | 80 | 280 | 104 | 10/30 |
| 0108 | 580 | 170 | R 2" | 80 | 450 | 104 | 15/30 |
| 0144 | 765 | 216 | R 2 1/2" | 110 | 580 | 129 | 20/30 |
| 0192 | 1015 | 216 | R 3" | 110 | 850 | 129 | 30/30 |
| 0288 | 1035 | 240 | R 3" | 125 | 850 | 154 | 30/50 |
| 0432 | 1090 | 410 | DN 100 | 200 | 580 | 219,1 | 3 x 20/30 |
| 0576 | 1350 | 410 | DN 100 | 200 | 850 | 219,1 | 3 x 30/30 |
| 0768 | 1410 | 480 | DN 150 | 240 | 850 | 273 | 4 x 30/30 |
| 1152 | 1460 | 540 | DN 150 | 250 | 850 | 323,9 | 6 x 30/30 |
| 1536 | 1600 | 660 | DN 200 | 300 | 850 | 406,4 | 8 x 30/30 |
| 1920 | 1600 | 660 | DN 200 | 300 | 850 | 406,4 | 10 x 30/30 |

* other connections can also be supplied

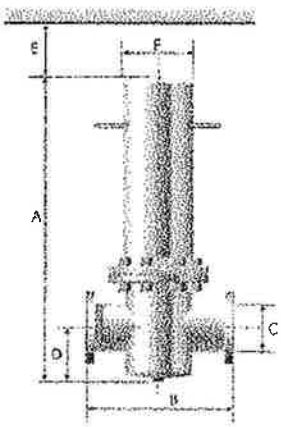

# Worldwide Warranty Statement

Each Donaldson product is warranted to be free from defects in materials and workmanship under proper use, installation, application, and maintenance in accordance with the manufacturer's written recommendations and specifications for the specific time period outlined below. Before installing the Donaldson products, the customer must prove that the application/usage of the Donaldson product is in accordance with the manufacturer's recommendations and specifications.

The manufacturers warranty is limited to any such defect and the sole remedy shall be the repair or replacement (at Donaldson's option) of the warranted and unaltered product, returned to the manufacturer and proven to have such defect and provided the defect occurred and is reported within the time guideline listed below.

Any warranted parts or dryers will extend to the remaining period of original warranty and not beyond.

**ALL DONALDSON PRODUCTS excluding filter elements and spare parts:**
24 months from date of purchase. Proof of purchase must be received from claimant to verify purchase date or commissioning by Donaldson service.

**DONALDSON ORIGINAL SPARE PARTS AND FILTER ELEMENTS:**
six (6) months 'parts only' warranty from date of purchase

**MAINTENANCE AND ADJUSTMENT:**

Do not fall inside the scope of this Warranty:

1. Adjustment to hot gas bypass valves, float drains, condenser cleaning, and other routine maintenance required to keep a dryer in good operating order. As said maintenance is the responsibility of the owner of the equipment, labour nor material will be reimbursed under warranty.

2. The usual maintenance and replacement type products. For further adjustment and maintenance requirements, please consult the appropriate Installation and Operation Manual.

No warranty service work can be commenced, without Donaldson's explicit written consent. Donaldson will not reimburse warranty work unless it has been pre-authorized.

**Unauthorized service makes this warranty void and any resulting charge, costs, damages or subsequent claim will not be paid.**

# Worldwide Warranty Statement

**What Is And What Is Not Covered Under This Warranty?**

**NOT COVERED:**

- Defects due to non-original Donaldson parts being used.
- Products found to be damaged by exposure to acidic or otherwise corrosive environments.
- All freight damage claims are not the responsibility of the manufacturer and are not covered under warranty as all products are shipped F.O.B. shipper. Please direct freight claims to the shipper in questions.
- More than one service technician on a warranty job or extra helpers (on site personnel should assist as much as possible).
- Overtime hours, weekend labour rates.
- Airfreight of units or parts. If airfreight is required, the manufacturer will pay the cost for normal ground transporting and the customer will be liable for costs exceeding those charges.
- Removal or reinstallation of equipment, extra bypassing to accomplish repairs.
- Hot gas valve adjustments or other normal maintenance items.
- Damages due to misapplication, poor maintenance, corrosive environments, or other items outside the scope of manufacturer defects. See Operating and Instruction Books.

**COVERED:**

- Repairs due to defects in materials.
- Repairs due to defects in workmanship.
- A maximum of 200 Km round trip travel for one service technician at a maximum rate of 65 € / hour and 30 cent / per Km.
- Any accessories, parts and equipment supplied by Donaldson, but not manufactured by Donaldson shall carry the manufacturer's warranty provided it is possible for Donaldson to pass on such warranty to the customer.
- **Total value of claim is limited to the maximum value of the warranted product including labour and materials.**

# Worldwide Warranty Statement

Specifications, limitations and recommended applications and uses for and of products may be established or amended by Donaldson from time to time.

Samples, descriptions, representations, and other information concerning products in Donaldson catalogues, advertisements or other promotional materials or statements of representations made by Donaldson employees or sales representatives are for general information purpose only and are not binding upon Donaldson with respect to such warranty provisions.

No employee or sales representative of Donaldson shall have any authority whatsoever to establish, expand or otherwise modify Donaldson product specifications, limitations, or recommended applications without Donaldson giving its prior written consent to the Customer.

To claim under warranty, the goods must have been installed and continuously maintained in the manner specified in the Operators Handbook. Our Service Engineers are highly qualified and equipped to assist you in this respect. They are also available to make repairs that may become necessary, in which event they will require an official order before carrying out the work. If such work is to be the subject of a warranty claim, the order should be endorsed 'for consideration under warranty'. Warranty claims must be submitted and shall be processed in accordance with Donaldson's established warranty claim procedure.

This is the only authorized Donaldson warranty and is in lieu of all other expressed or implied warranties or representation including any implied warranties or other obligations on the part of the manufacturer. The forgoing is the exclusive remedy of any buyer of the manufacturer's product. The maximum damages liability of the manufacturer's is the original purchase price of the product or part. To the extent permitted by the applicable law, Donaldson will not be held liable for business interruptions, loss of profits, personal injury, costs of delay or any other special indirect, incidental, special or consequential loss, costs, or damages.

# Herstellerbescheinigung

## Richtlinie für Druckgeräte 97/23/EG

DE Name und Anschrift des Herstellers:

**Donaldson Filtration Deutschland GmbH**
**Büssingstraße 1**
**D-42781 Haan**

Hiermit wird bescheinigt, dass die Fertigung und die Ergebnisse der Prüfungen an den unten genannten Druckgeräten, die Anforderung der Richtlinie 97/23/EG gemäß Artikel 3, Absatz 3 erfüllen.

Beschreibung der Druckgeräte:

| | |
|---|---|
| P-EG 0006 | P-EG 0027 |
| P-EG 0009 | P-EG 0036 |
| P-EG 0012 | P-EG 0048 |
| P-EG 0018 | |

Haan, 14.01.2009

**J. Debackere**
**Plant Manager**

**M. Pohlmann**
**Quality Representative**

# Konformitätserklärung

## Richtlinie für Druckgeräte 97/23/EG

DE Name und Anschrift des Herstellers:

**Donaldson Filtration Deutschland GmbH**
**Büssingstraße 1**
**D-42781 Haan**

Hiermit wird bescheinigt, dass die Fertigung und die Ergebnisse der Prüfungen an den unten genannten Druckgeräten, die Anforderung der Richtlinie 97/23/EG erfüllen.

Kategorie: I Modul: A

Die Druckgeräte sind mit dem abgebildeten Zeichen gekennzeichnet: CE

Beschreibung der Druckgeräte:

| | |
|---|---|
| P-EG 0072 | P-EG 0192 |
| P-EG 0108 | P-EG 0288 |
| P-EG 0144 | |

Haan, 14.01.2009

**J. Debackere**
**Plant Manager**

**M. Pohlmann**
**Quality Representative**

# Manufacturer Certificate

## Pressure Equipment Directive 97/23/EC

GB Name and address of the manufacturer:

**Donaldson Filtration Deutschland GmbH**
**Büssingstraße 1**
**D-42781 Haan**

It is hereby certified that the manufacturing and the results of the tests fulfill the requirements of directive 97/23/EC, article 3, paragraph 3 on the following pressure vessels.

Description of the pressure vessels:

| | |
|---|---|
| P-EG 0006 | P-EG 0027 |
| P-EG 0009 | P-EG 0036 |
| P-EG 0012 | P-EG 0048 |
| P-EG 0018 | |

Haan, 14.01.2009

**J. Debackere**
**Plant Manager**

**M. Pohlmann**
**Quality Representative**

# Declaration of Conformity

## Pressure Equipment Directive 97/23/EC

GB Name and address of the manufacturer:

**Donaldson Filtration Deutschland GmbH**
**Büssingstraße 1**
**D-42781 Haan**

It is hereby certified that the manufacturing and the results of the tests fulfill the requirements of directive 97/23/EC, on the following pressure vessels

Categorie: I Module: A

The pressure vessels are marked with the sign shown: CE

Description of the pressure vessels:

| | |
|---|---|
| P-EG 0072 | P-EG 0192 |
| P-EG 0108 | P-EG 0288 |
| P-EG 0144 | |

Haan, 14.01.2009

**J. Debackere**
**Plant Manager**

**M. Pohlmann**
**Quality Representative**

# Certificat du fabricant

**Directive pour les appareils sous pression 97/23/CEE**

FR

Nom et adresse du fabricant:

**Donaldson Filtration Deutschland GmbH**
**Büssingstraße 1**
**D-42781 Haan**

Par la présente, il est certifié que la fabrication et les résultats des contrôles faits sur les produits mentionnés ci-dessous, sont conformes aux exigences de la directive 97/23/CEE conformément à l'article 3, paragr. 3.

Description des appareils sous pression:

| | |
|---|---|
| P-EG 0006 | P-EG 0027 |
| P-EG 0009 | P-EG 0036 |
| P-EG 0012 | P-EG 0048 |
| P-EG 0018 | |

Haan, 14.01.2009

**J. Debackere**
**Plant Manager**

**M. Pohlmann**
**Quality Representative**

# Déclaration de conformité

**Directive pour les appareils sous pression 97/23/CEE**

FR

Nom et adresse du fabricant:

**Donaldson Filtration Deutschland GmbH**
**Büssingstraße 1**
**D-42781 Haan**

Par la présente, il est certifié que la fabrication et les résultats des contrôles faits sur les produits mentionnés ci-dessous, sont conformes aux exigences de la directive 97/23/CEE

Catégorie: I Module: A

L'appareil sous pression est identifié par le sigle ci-joint: CE

Description des appareils sous pression:

| | |
|---|---|
| P-EG 0072 | P-EG 0192 |
| P-EG 0108 | P-EG 0288 |
| P-EG 0144 | |

Haan, 14.01.2009

**J. Debackere**
**Plant Manager**

**M. Pohlmann**
**Quality Representative**

# Bevestiging van de fabrikant

**Richtlijn voor druktoestellen 97/23/EC**

NL

Naam en adres van de fabrikant:

**Donaldson Filtration Deutschland GmbH**
**Büssingstraße 1**
**D-42781 Haan**

Hiermee wordt bevestigd dat de resultaten van de tests die aan de volgende druktoestellen zijn uitgevoerd voldoen aan de eisen conform richtlijn 97/23/EC, artikel 3, paragraaf 3.

Beschrijving van het druktoestel:

| | |
|---|---|
| P-EG 0006 | P-EG 0027 |
| P-EG 0009 | P-EG 0036 |
| P-EG 0012 | P-EG 0048 |
| P-EG 0018 | |

Haan, 14.01.2009

**J. Debackere**
**Plant Manager**

**M. Pohlmann**
**Quality Representative**

# Verklaring van overeenstemming

**Richtlijn voor druktoestellen 97/23/EC**

NL

Naam en adres van de fabrikant:

**Donaldson Filtration Deutschland GmbH**
**Büssingstraße 1**
**D-42781 Haan**

Hiermee wordt bevestigd dat de uitvoering en de resultaten van de tests die aan de onderstaande druktoestellen zijn uitgevoerd voldoen aan de eisen conform richtlijn 97/23/EC.

Categorie: I Module: A

Met de afgebeelde tekening wordt het druktoestel aangeduid: CE

Beschrijving van het druktoestel:

| | |
|---|---|
| P-EG 0072 | P-EG 0192 |
| P-EG 0108 | P-EG 0288 |
| P-EG 0144 | |

Haan, 14.01.2009

**J. Debackere**
**Plant Manager**

**M. Pohlmann**
**Quality Representative**

# CERTIFICATES



Professional Milling and Handling of Powders

| | |
|---|---|
| **Description** | **MF-3 Novartis Pharma / SG-Singapore** |
| **Project Nr** | **PRO-11-0078** |
| **Serial Nr** | **11007835099** |

**We certify herewith that the below listed are conform for usage in the following ATEX zones :**

| | | | |
|---|---|---|---|
| **int.** | CE Ex | **II** | 1G IIB T4<br>1D T130°C |
| **ext.** | CE Ex | **II** | 3D T130°C |

**All documents relevent to the below listed project are found on the following pages**

## Index

▶ **EC Declaration of conformity of MF-3 11007821034**

**Project Manager**
Thomas Lehmann
Route du Coteau 7
1763 Granges-Paccot

Granges-Paccot, 4. juillet 2011

Professional Milling and Handling of Powders

# EC Declaration of conformity



We declare that the security and design of the equipment described below are conform to the requirements of following European directives:

| | |
|---|---|
| **Electromagnetic Compatibility CEM :** | 2004/108/CE |
| **Machinery Directive :** | 2006/42/CE |
| **ATEX :** | 94/9/CE |

**Additional safety indications:**
Additional information for EEx-Machines Special conditions « X »

| | | |
|---|---|---|
| **Manufacturer :** | Frewitt SA, route du Coteau 7, CH-1763 Granges-Paccot | |
| **Organisme notifié :** | SNCH, route de Luxembourg 11, L-5201 Sandweiler | |
| Notified Body's identification Nr : | 0499 | |
| EC type examination Nr : | SNCH 03 ATEX 3486 X | (mecanic) |
| **Notified Body :** | Electrosuisse, Luppmenstrasse 1, CH-8320 Fehraltdorf | |
| Notified Body's identification Nr : | 1258 | |
| Quality assurance of production Nr : | SEV 09 ATEX 4137 | |
| EC type examination Nr : | SEV 06 ATEX 0133 | (electric) |

| | | | | | | |
|---|---|---|---|---|---|---|
| **Description :** | Oscillating mill | | | | **Type :** | MF-3 |
| **Year of manufacture :** | 2011 | | | | **Serial Nr :** | 11007821034 |
| **ATEX certification :** | int. | CE | **1258** | Ex | II | 1G c IIB T4 X<br>1D c T130°C IP65 X |
| | ext. | CE | **1258** | Ex | II | 3D c Ex tD T130°C IP65 X |

The following technical standards have been applied in order to implement the basic health and safety requirements mentioned in the EC directives in an appropriate manne :

| | |
|---|---|
| **General principles of construction** | EN ISO 12100-1/2 |
| **Safety distance** | EN ISO 13857 |
| **Design and ordering system** | EN ISO 13849-1 |
| **Prevention / protection of the explosion** | EN 1127-1 |
| **Non-electrical equipment:** | |
| general requirements | EN 13463-1 |
| protection construction "c" | EN 13463-5 |

Any alteration or inappropriate uses of this equipment makes this declaration invalid.

**Project Manager**
Thomas Lehmann
Rte du Coteau 7
1763 Granges-Paccot

**Legal representative**
Antoine Virdis
Rte du Coteau 7
1763 Granges-Paccot

Granges-Paccot, 9. juin 2011

Professional Milling and Handling of Powders

| Relevé de contrôle EN 10204-2.2 pour les matériaux des pièces utilisées. | Werkzeugnis EN 10204-2.2 für die Werkstoffe der produktberührenden Teile. | Test report EN 10204-2.2 for material of product contact parts |
|---|---|---|

**Client:** **Kunde:** **Customer:**

## NOVARTIS SINGAPORE PHARMACEUTICAL

## SG-Singapore

**N° de série** **Serien-Nr.** **Serial Nr.**

**11007821034**

Nous certifions que les parties en contact avec le produit des pièces utilisés sont, soit en:

Hiermit bestätigen wir, dass die produktberührten Teile der obengenannten Zerkleinerungs-maschine aus folgenden Werkstoffen hergestellt sind:

We certify herewith that the used parts of above-mentioned device are made of:

**Acier inoxydable:** **Rostfreier Stahl:** **Stainless steels:**

| AISI | Nr. |
|---|---|
| 316 | 1.4401 |
| 316L | 1.4404 |
| 316L | 1.4435 |

**Joints (conforme FDA) :** **Dichtungen (FDA-konform) :** **Seals (FDA conform) :**

| | | |
|---|---|---|
| Gylon, blanc (PTFE) | Gylon, weiss (PTFE) | Gylon, white (PTFE) |
| Silicone | Silikon | Silicone |
| EPDM | EPDM | EPDM |
| PTFE | PTFE | PTFE |
| Elastollan | Elastollan | Elastollan |

En outre, nous certifions qu'aucun élément d'amiante n'a été utilisé dans nos machines.

Desweiteren bestätigen wir, dass in unserer Anlage keine asbesthaltigen Teile enthalten sind.

Furthermore, we certify that no asbestos material has been used for manufacturing the machine.

**Frewitt Fabrique de Machines SA**

**R. Rybarikova**
Rédactrice technique
Technischer Redaktor
Technical writter



Professional Milling and Handling of Powders

Voir documents suivants. Siehe folgende Dokumente. See following documents

Professional Milling and Handling of Powders

Nonfood Compounds Program Listed

**NSF International / Nonfood Compounds Registration Program**

**Doc No: 100243-1**

October 2, 2008

Dr. Luciana Husfeld
KLUBER LUBRICATION MUNCHEN KG.
GEISENHAUSENER STR. 7
81379 MÜNCHEN
GERMANY

RE: Klüberoil® 4 UH1- 32 N
Category Code: H1
NSF Registration No. 121152

Dear Dr. Luciana Husfeld:

NSF has processed the application for Registration of **Klüberoil® 4 UH1- 32 N** to the NSF International Registration Guidelines for Proprietary Substances and Nonfood Compounds (2008), which are available at www.nsfwhitebook.org. The NSF Nonfood Compounds Registration Program is a continuation of the USDA product approval and listing program, which is based on meeting regulatory requirements including FDA 21 CFR for appropriate use, ingredient and labeling review.

**This product is acceptable as a lubricant with incidental food contact (H1) for use in and around food processing areas. Such compounds may be used on food processing equipment as a protective anti-rust film, as a release agent on gaskets or seals of tank closures, and as a lubricant for machine parts and equipment in locations in which there is a potential exposure of the lubricated part to food. The amount used should be the minimum required to accomplish the desired technical effect on the equipment. If used as an anti-rust film, the compound must be removed from the equipment surface by washing or wiping, as required to leave the surface effectively free of any substance which could be transferred to food being processed.**

NSF Registration of this product is current when the NSF Registration Number, Category Code, and Registration Mark appear on the NSF-approved product label, and the Registered product name is included in the current NSF White Book Listing of Nonfood Compounds at the NSF website (www.nsfwhitebook.org). The NSF Registration Mark can be downloaded by clicking the "Download Registration Mark" link on the NSF website (www.nsfwhitebook.org).

NSF Listing of all Registered Nonfood compounds by NSF International is not an endorsement of those compounds, or of any performance or efficacy claims made by the manufacturer.

Registration status may be verified at any time via the NSF website, at www.nsfwhitebook.org. Changes in formulation or label, without the prior written consent of NSF, will void Registration, and will supersede the on-line listing.

Sincerely,

Jennifer De France
NSF Nonfood Compounds Registration Program

Company No: N04391

**Doc No: 104105-1**

August 26, 2005

Dr. Luciana Husfeld
KLUBER LUBRICATION MUNCHEN KG.
GEISENHAUSENER STR. 7
81379 MÜNCHEN
GERMANY

RE: Kluberpaste® UH1 84-201
Category Code: H1
NSF Registration No. 136305

Dear Dr. Luciana Husfeld:

NSF has processed the application for Registration of **Kluberpaste® UH1 84-201** to the NSF Registration Guidelines for Proprietary Substances and Nonfood Compounds (2004), which are available at http://www.nsf.org. The NSF Nonfood Compounds Registration Program is a continuation of the USDA product approval and listing program, which is based on meeting regulatory requirements including FDA 21 CFR for appropriate use, ingredient and labeling.

**This product is acceptable as a lubricant with incidental food contact (H1) for use in and around food processing areas. Such compounds may be used on food processing equipment as a protective anti-rust film, as a release agent on gaskets or seals of tank closures, and as a lubricant for machine parts and equipment in locations in which there is a potential exposure of the lubricated part to food. The amount used should be the minimum required to accomplish the desired technical effect on the equipment. If used as an anti-rust film, the compound must be removed from the equipment surface by washing or wiping, as required to leave the surface effectively free of any substance which could be transferred to food being processed.**

NSF Registration of this product is current when the NSF Registration Number, Category Code, and Registration Mark appear on the NSF-approved product label, and the registered product name is included in the current NSF White Book Listing of Nonfood Compounds at the NSF website (http://www.nsf.org). The NSF Registration Mark can be downloaded from the NSF website, at http://www.nsf.org/business/about_NSF/nsf_marks_download.asp.

NSF Listing of all registered Nonfood compounds by NSF International is not an endorsement of those compounds, or of any performance or efficacy claims made by the manufacturer.

Registration status may be verified at any time via the NSF web site, at http://www.nsf.org. Changes in formulation or label, without the prior written consent of NSF, will void registration, and will supersede the on-line listing.

Sincerely,

Carmen Grindatti
NSF Nonfood Compounds Registration Program

Company No: N04391

**Doc No: 104106-1**

October 3, 2008

Dr. Luciana Husfeld
KLUBER LUBRICATION MUNCHEN KG.
GEISENHAUSENER STR. 7
81379 MÜNCHEN
GERMANY

RE: Klüberoil® 4 UH1- 220 N
Category Code: H1
NSF Registration No. 121171

Dear Dr. Luciana Husfeld:

NSF has processed the application for Registration of **Klüberoil® 4 UH1- 220 N** to the NSF International Registration Guidelines for Proprietary Substances and Nonfood Compounds (2008), which are available at www.nsfwhitebook.org. The NSF Nonfood Compounds Registration Program is a continuation of the USDA product approval and listing program, which is based on meeting regulatory requirements including FDA 21 CFR for appropriate use, ingredient and labeling review.

**This product is acceptable as a lubricant with incidental food contact (H1) for use in and around food processing areas. Such compounds may be used on food processing equipment as a protective anti-rust film, as a release agent on gaskets or seals of tank closures, and as a lubricant for machine parts and equipment in locations in which there is a potential exposure of the lubricated part to food. The amount used should be the minimum required to accomplish the desired technical effect on the equipment. If used as an anti-rust film, the compound must be removed from the equipment surface by washing or wiping, as required to leave the surface effectively free of any substance which could be transferred to food being processed.**

NSF Registration of this product is current when the NSF Registration Number, Category Code, and Registration Mark appear on the NSF-approved product label, and the Registered product name is included in the current NSF White Book Listing of Nonfood Compounds at the NSF website (www.nsfwhitebook.org). The NSF Registration Mark can be downloaded by clicking the "Download Registration Mark" link on the NSF website (www.nsfwhitebook.org).

NSF Listing of all Registered Nonfood compounds by NSF International is not an endorsement of those compounds, or of any performance or efficacy claims made by the manufacturer.

Registration status may be verified at any time via the NSF website, at www.nsfwhitebook.org. Changes in formulation or label, without the prior written consent of NSF, will void Registration, and will supersede the on-line listing.

Sincerely,

Jennifer De France
NSF Nonfood Compounds Registration Program

Company No: N04391

# Material Safety Data Sheet

**According to 91/155 EEC**

Printing date 27.04.2006 Reviewed on 25.04.2006

## 1 Identification of the substance/preparation and of the company/undertaking

· **Product details**

· **Trade name: Klüberpaste UH1 84-201**

· **Article number:** 005113
· **Application of the substance / the preparation** Lubricant

· **Manufacturer/Supplier:**
KLÜBER LUBRICATION MÜNCHEN KG
Geisenhausenerstrasse 7
D-81379 München
Tel.: 0049 (0) 897876-0
Fax: 0049 (0) 897876-333

· **Further information obtainable from:** Material Compliance Management

· **Information in case of emergency:** 0011 49 89 7876 700 (24 hrs)

* 

## 2 Composition/information on ingredients

· **Chemical characterization**
· **Description:**
Synthetic hydrocarbon oil
solid lubricant
PTFE

| · **Dangerous components:** | | |
|---|---|---|
| | amine neutralized phosphoric acid ester of alkylated alcohols<br>Xi, N; R 36/38-51/53 | 0.25-1% |
| CAS: 95-38-5<br>EINECS: 204-414-9 | 2-(2-heptadec-8-enyl-2-imidazolin-1-yl)ethanol<br>C, N; R 22-34-50/53 | 0.25-1% |
| | Amine carboxylic acid compound<br>Xi, N; R 38-41-50 | 0.25-1% |

· **Additional information:** For the wording of the listed risk phrases refer to section 16.

## 3 Hazards identification

· **Hazard description:** Not applicable.
· **Information concerning particular hazards for human and environment:**
The product has to be labelled due to the calculation procedure of the "General Classification guideline for preparations of the EU" in the latest valid version.
R 52/53 Harmful to aquatic organisms, may cause long-term adverse effects in the aquatic environment.
· **Classification system:**
The classification is according to the latest editions of the EU-lists, and extended by company and literature data.

## 4 First-aid measures

· **After inhalation:** Supply fresh air; consult doctor in case of complaints.
· **After skin contact:** Wash off with soap and plenty of water.

(Contd. on page 2)

# Material Safety Data Sheet
**According to 91/155 EEC**

Printing date 27.04.2006 Reviewed on 25.04.2006

**Trade name: Klüberpaste UH1 84-201**

(Contd. of page 1)

· **After eye contact:**
Rinse opened eye for several minutes under running water. If symptoms persist, consult a doctor.
· **After swallowing:** If symptoms persist consult doctor.

## 5 Fire-fighting measures

· **Suitable extinguishing agents:**
Water haze
Foam
Fire-extinguishing powder
Carbon dioxide
· **For safety reasons unsuitable extinguishing agents:** Water with full jet
· **Special hazards caused by the substance, its products of combustion or resulting gases:**
In case of fire, the following can be released:
Carbon monoxide (CO)
Hydrocarbons
traces of fluorinated products
· **Protective equipment:**
Do not inhale explosion gases or combustion gases.
Standard procedure for chemical fires.
· **Additional information**
Cool endangered receptacles with water spray.
Dispose of fire debris and contaminated fire fighting water in accordance with official regulations.

## 6 Accidental release measures

· **Person-related safety precautions:** Not required.
· **Measures for environmental protection:** Do not allow to enter sewers/ surface or ground water.
· **Measures for cleaning/collecting:**
Pick up mechanically.
Dispose of the material collected according to regulations.

## 7 Handling and storage

· **Handling:**
· **Information for safe handling:** No special measures required.
· **Information about fire - and explosion protection:** No special measures required.

· **Storage:**
· **Requirements to be met by storerooms and receptacles:**
Store in cool, dry conditions in well sealed receptacles.
· **Information about storage in one common storage facility:**
Store away from foodstuffs.
Store away from oxidizing agents.
· **Further information about storage conditions:** None.

## 8 Exposure controls/personal protection

· **Additional information about design of technical facilities:** No further data; see item 7.

· **Ingredients with limit values that require monitoring at the workplace:**
The product does not contain any relevant quantities of materials with critical values that have to be monitored at the workplace.
· **Additional information:** The lists valid during the making were used as basis.

(Contd. on page 3)

# Material Safety Data Sheet
**According to 91/155 EEC**

Printing date 27.04.2006 Reviewed on 25.04.2006

**Trade name: Klüberpaste UH1 84-201**

(Contd. of page 2)

· **Personal protective equipment:**
· **General protective and hygienic measures:**
Immediately remove all soiled and contaminated clothing
Avoid close or long term contact with the skin.
Be sure to clean skin thoroughly after work and before breaks.
Keep away from tobacco products.
· **Respiratory protection:** Not required.
· **Protection of hands:** Preventive skin protection by use of skin-protecting agents is recommended.
· **Eye protection:** Not required.

## 9 Physical and chemical properties

· **General Information**

| | |
|---|---|
| **Form:** | Pasty |
| **Colour:** | White |
| **Odour:** | Product specific |

· **Change in condition**
**Drip point:** > 240°C (DIN ISO 2176)

· **Flash point:** not applicable

· **Danger of explosion:** Product does not present an explosion hazard.

· **Density at 20°C:** 1.13 g/cm³

· **Solubility in / Miscibility with water:** Insoluble.

## 10 Stability and reactivity

· **Thermal decomposition / conditions to be avoided:**
No decomposition if used and stored according to specifications.
· **Materials to be avoided:** oxidizing agents
· **Dangerous reactions** No dangerous reactions known.
· **Dangerous decomposition products:** > 280°C danger of forming toxic pyrolysis products.

## 11 Toxicological information

· **Additional toxicological information:**
Prolonged skin contact may cause skin irritation and/or dermatitis.

## 12 Ecological information

· **Ecotoxical effects:**
· **Behaviour in sewage processing plants:** The product can be mechanically separated.
· **General notes:**
Harmful to aquatic organisms
Do not allow product to reach ground water, water course or sewage system.

## 13 Disposal considerations

· **Product:**
· **Recommendation** Can be incinerated in accordance with local and national regulations.

(Contd. on page 4)

# Material Safety Data Sheet
**According to 91/155 EEC**

Printing date 27.04.2006 Reviewed on 25.04.2006

**Trade name: Klüberpaste UH1 84-201**

(Contd. of page 3)

· **Waste disposal key:**
For this product no waste disposal key according the European Waste Catalogue (EWC) can be determined, as only the purpose of application defined by the user enables an allocation. The waste code number has to be determined in accordance with the local waste disposer.

· **Uncleaned packaging:**
· **Recommendation:**
Empty contaminated packagings thoroughly. They may be recycled after thorough and proper cleaning.

## 14 Transport information

· **Land transport ADR/RID (cross-border)**
· **ADR/RID class:** -

· **Maritime transport IMDG:**
· **IMDG Class:** -

· **Air transport ICAO-TI and IATA-DGR:**
· **ICAO/IATA Class:** -

· **Transport/Additional information:**
Not classified as dangerous according to the above specifications.

## 15 Regulatory information

· **Labelling according to EU guidelines:**
The product has been classified and marked in accordance with EU Directives / Ordinance on Hazardous Materials.

· **Risk phrases:**
52/53 Harmful to aquatic organisms, may cause long-term adverse effects in the aquatic environment.

· **Safety phrases:**
61 Avoid release to the environment. Refer to special instructions/safety data sheets.

## 16 Other information

This information is based on our present knowledge. However, this shall not constitute a guarantee for any specific product features and shall not establish a legally valid contractual relationship.

· **Relevant R-phrases**
22 Harmful if swallowed.
34 Causes burns.
36/38 Irritating to eyes and skin.
38 Irritating to skin.
41 Risk of serious damage to eyes.
50 Very toxic to aquatic organisms.
50/53 Very toxic to aquatic organisms, may cause long-term adverse effects in the aquatic environment.
51/53 Toxic to aquatic organisms, may cause long-term adverse effects in the aquatic environment.

· **Department issuing MSDS:** Material Compliance Management
· **Contact:** +49(0)897876-1564
· *** Data compared to the previous version altered.**

# Safety Data Sheet

**according to 1907/2006/EC, Article 31**

Printing date 17.03.2009 Revision: 17.03.2009

* 

## 1 Identification of the substance/preparation and of the company/undertaking

· **Product details**

· **Trade name: Klüberoil 4 UH1- 32N**

· **Article number:** 029037
· **Application of the substance / the preparation** Lubricating oil

· **Manufacturer/Supplier:**
KLÜBER LUBRICATION MÜNCHEN KG
Geisenhausenerstrasse 7
D-81379 München
Tel.: 0049 (0) 897876-0
Fax: 0049 (0) 897876-333

· **Further information obtainable from:**
Material Compliance Management
E-Mail: mcm@klueber.com

· **Information in case of emergency:** 0049 (0) 89 7876 700 (24 hrs)

* 

## 2 Hazards identification

· **Hazard description:** Not applicable.
· **Information concerning particular hazards for human and environment:**
The product does not have to be labelled due to the calculation procedure of the "General Classification guideline for preparations of the EU" in the latest valid version.
· **Classification system:**
The classification is according to the latest editions of the EU-lists, and extended by company and literature data.

## 3 Composition/information on ingredients

· **Chemical characterization**
· **Description:**
Synthetic hydrocarbon oil
ester oil

· **Dangerous components:** Void
· **Additional information:** For the wording of the listed risk phrases refer to section 16.

## 4 First-aid measures

· **After inhalation:** Supply fresh air; consult doctor in case of complaints.
· **After skin contact:** Wash off with soap and plenty of water.
· **After eye contact:**
Rinse opened eye for several minutes under running water. If symptoms persist, consult a doctor.
· **After swallowing:** If symptoms persist consult doctor.

## 5 Fire-fighting measures

· **Suitable extinguishing agents:**
Water haze

(Contd. on page 2)

# Safety Data Sheet
## according to 1907/2006/EC, Article 31

Printing date 17.03.2009 Revision: 17.03.2009

**Trade name: Klüberoil 4 UH1- 32N**

(Contd. of page 1)

Foam
Fire-extinguishing powder
Carbon dioxide
· **For safety reasons unsuitable extinguishing agents:** Water with full jet
· **Special hazards caused by the substance, its products of combustion or resulting gases:**
In case of fire, the following can be released:
Carbon monoxide (CO)
Hydrocarbons
· **Protective equipment:**
Do not inhale explosion gases or combustion gases.
Standard procedure for chemical fires.
· **Additional information**
Cool endangered receptacles with water spray.
Dispose of fire debris and contaminated fire fighting water in accordance with official regulations.

## 6 Accidental release measures

· **Person-related safety precautions:** Particular danger of slipping on leaked/spilled product.
· **Measures for environmental protection:** Do not allow to enter sewers/ surface or ground water.
· **Measures for cleaning/collecting:**
Absorb with liquid-binding material (sand, diatomite, acid binders, universal binders, sawdust).
Dispose of the material collected according to regulations.

## 7 Handling and storage

· **Handling:**
· **Information for safe handling:** Prevent formation of aerosols.
· **Information about fire - and explosion protection:** No special measures required.

· **Storage:**
· **Requirements to be met by storerooms and receptacles:**
Store in cool, dry conditions in well sealed receptacles.
· **Information about storage in one common storage facility:**
Store away from foodstuffs.
Store away from oxidizing agents.
· **Further information about storage conditions:** None.

## 8 Exposure controls/personal protection

· **Additional information about design of technical facilities:** No further data; see item 7.

· **Ingredients with limit values that require monitoring at the workplace:**
The product does not contain any relevant quantities of materials with critical values that have to be monitored at the workplace.
· **Additional information:** The lists valid during the making were used as basis.

· **Personal protective equipment:**
· **General protective and hygienic measures:**
Do not inhale gases / fumes / aerosols.
Immediately remove all soiled and contaminated clothing
Avoid contact with the skin.
Be sure to clean skin thoroughly after work and before breaks.
· **Protection of hands:** Preventive skin protection by use of skin-protecting agents is recommended.
· **Eye protection:** Goggles recommended during refilling



(Contd. on page 3)

# Safety Data Sheet
**according to 1907/2006/EC, Article 31**

Printing date 17.03.2009 Revision: 17.03.2009

**Trade name: Klüberoil 4 UH1- 32N**

(Contd. of page 2)

## 9 Physical and chemical properties

· **General Information**

| | |
|---|---|
| **Form:** | Fluid |
| **Colour:** | Colourless |
| **Odour:** | Product specific |

· **Change in condition**

| | |
|---|---|
| **Pour point** | ~ -35°C (DIN ISO 3016) |

· **Flash point:** > 200°C (DIN ISO 2592)

· **Danger of explosion:** Product does not present an explosion hazard.

· **Density at 20°C:** ~ 0.84 g/cm³ (DIN 51757)

· **Solubility in / Miscibility with water:** Insoluble.

· **Viscosity:**

| | |
|---|---|
| **Kinematic at 40°C:** | ~ 32 mm²/s (DIN 51562) |

## 10 Stability and reactivity

· **Thermal decomposition / conditions to be avoided:**
No decomposition if used and stored according to specifications.
· **Materials to be avoided:** oxidizing agents
· **Dangerous reactions** No dangerous reactions known.
· **Dangerous decomposition products:** none under normal use

## 11 Toxicological information

· **Additional toxicological information:**
Prolonged skin contact may cause skin irritation and/or dermatitis.

## 12 Ecological information

· **Ecotoxical effects:**
· **Behaviour in sewage processing plants:** The product can be mechanically separated.
· **General notes:** Do not allow product to reach ground water, water course or sewage system.

* 
## 13 Disposal considerations

· **Product:**
· **Recommendation**
Disposal must be made according to official regulations.
Can be reused after reprocessing.
· **Waste disposal key:**
For this product no waste disposal key according the European Waste Catalogue (EWC) can be determined, as only the purpose of application defined by the user enables an allocation. The waste code number has to be determined in accordance with the local waste disposer.

(Contd. on page 4)

# Safety Data Sheet
## according to 1907/2006/EC, Article 31

Printing date 17.03.2009 Revision: 17.03.2009

**Trade name: Klüberoil 4 UH1- 32N**

(Contd. of page 3)

· **Uncleaned packaging:**
· **Recommendation:**
Empty contaminated packagings thoroughly. They may be recycled after thorough and proper cleaning.

## 14 Transport information

· **Land transport ADR/RID (cross-border)**
· **ADR/RID class:** -

· **Maritime transport IMDG:**
· **IMDG Class:** -

· **Air transport ICAO-TI and IATA-DGR:**
· **ICAO/IATA Class:** -

· **Transport/Additional information:**
Not classified as dangerous according to the above specifications.

* 
## 15 Regulatory information

· **Labelling according to EU guidelines:**
The product is not subject to classification according to the calculation methods of the "General Classification Guideline for Preparations of the EU" as issued in the latest valid version.

* 
## 16 Other information

This information is based on our present knowledge. However, this shall not constitute a guarantee for any specific product features and shall not establish a legally valid contractual relationship.

· **Department issuing MSDS:** Material Compliance Management
· **Contact:** +49(0)897876-1564
· *** Data compared to the previous version altered.**

**Doc No: 104117-1**

# Safety Data Sheet

**according to 1907/2006/EC, Article 31**

Printing date 17.03.2009 Revision: 17.03.2009

* 

## 1 Identification of the substance/preparation and of the company/undertaking

· **Product details**

· **Trade name: Klüberoil 4 UH1- 220N**

· **Article number:** 029042
· **Application of the substance / the preparation** Lubricating oil

· **Manufacturer/Supplier:**
KLÜBER LUBRICATION MÜNCHEN KG
Geisenhausenerstrasse 7
D-81379 München
Tel.: 0049 (0) 897876-0
Fax: 0049 (0) 897876-333

· **Further information obtainable from:**
Material Compliance Management
E-Mail: mcm@klueber.com

· **Information in case of emergency:** 0049 (0) 89 7876 700 (24 hrs)

* 

## 2 Hazards identification

· **Hazard description:** Not applicable.
· **Information concerning particular hazards for human and environment:**
The product does not have to be labelled due to the calculation procedure of the "General Classification guideline for preparations of the EU" in the latest valid version.
· **Classification system:**
The classification is according to the latest editions of the EU-lists, and extended by company and literature data.

* 

## 3 Composition/information on ingredients

· **Chemical characterization**
· **Description:**
Synthetic hydrocarbon oil
ester oil

· **Dangerous components:** Void
· **Additional information:** For the wording of the listed risk phrases refer to section 16.

## 4 First-aid measures

· **After inhalation:** Supply fresh air; consult doctor in case of complaints.
· **After skin contact:** Wash off with soap and plenty of water.
· **After eye contact:**
Rinse opened eye for several minutes under running water. If symptoms persist, consult a doctor.
· **After swallowing:** If symptoms persist consult doctor.

## 5 Fire-fighting measures

· **Suitable extinguishing agents:**
Water haze

(Contd. on page 2)

# Safety Data Sheet
## according to 1907/2006/EC, Article 31

Printing date 17.03.2009 Revision: 17.03.2009

**Trade name: Klüberoil 4 UH1- 220N**

(Contd. of page 1)

Foam
Fire-extinguishing powder
Carbon dioxide
· **For safety reasons unsuitable extinguishing agents:** Water with full jet
· **Special hazards caused by the substance, its products of combustion or resulting gases:**
In case of fire, the following can be released:
Carbon monoxide (CO)
Hydrocarbons
· **Protective equipment:**
Do not inhale explosion gases or combustion gases.
Standard procedure for chemical fires.
· **Additional information**
Cool endangered receptacles with water spray.
Dispose of fire debris and contaminated fire fighting water in accordance with official regulations.

## 6 Accidental release measures

· **Person-related safety precautions:** Particular danger of slipping on leaked/spilled product.
· **Measures for environmental protection:** Do not allow to enter sewers/ surface or ground water.
· **Measures for cleaning/collecting:**
Absorb with liquid-binding material (sand, diatomite, acid binders, universal binders, sawdust).
Dispose of the material collected according to regulations.

## 7 Handling and storage

· **Handling:**
· **Information for safe handling:** Prevent formation of aerosols.
· **Information about fire - and explosion protection:** No special measures required.

· **Storage:**
· **Requirements to be met by storerooms and receptacles:**
Store in cool, dry conditions in well sealed receptacles.
· **Information about storage in one common storage facility:**
Store away from foodstuffs.
Store away from oxidizing agents.
· **Further information about storage conditions:** None.

## 8 Exposure controls/personal protection

· **Additional information about design of technical facilities:** No further data; see item 7.

· **Ingredients with limit values that require monitoring at the workplace:**
The product does not contain any relevant quantities of materials with critical values that have to be monitored at the workplace.
· **Additional information:** The lists valid during the making were used as basis.

· **Personal protective equipment:**
· **General protective and hygienic measures:**
Do not inhale gases / fumes / aerosols.
Immediately remove all soiled and contaminated clothing
Avoid contact with the skin.
Be sure to clean skin thoroughly after work and before breaks.
· **Protection of hands:** Preventive skin protection by use of skin-protecting agents is recommended.
· **Eye protection:** Goggles recommended during refilling



(Contd. on page 3)

# Safety Data Sheet
**according to 1907/2006/EC, Article 31**

Printing date 17.03.2009 Revision: 17.03.2009

**Trade name: Klüberoil 4 UH1- 220N**

(Contd. of page 2)

## 9 Physical and chemical properties

· **General Information**

| | |
|---|---|
| **Form:** | Fluid |
| **Colour:** | Colourless |
| **Odour:** | Product specific |

· **Change in condition**

| | |
|---|---|
| **Pour point** | ~ -30°C (DIN ISO 3016) |

· **Flash point:** > 200°C (DIN ISO 2592)

· **Danger of explosion:** Product does not present an explosion hazard.

· **Density at 20°C:** ~ 0.85 g/cm³ (DIN 51757)

· **Solubility in / Miscibility with water:** Insoluble.

· **Viscosity:**

| | |
|---|---|
| **Kinematic at 40°C:** | ~ 220 mm²/s (DIN 51562) |

## 10 Stability and reactivity

· **Thermal decomposition / conditions to be avoided:**
No decomposition if used and stored according to specifications.
· **Materials to be avoided:** oxidizing agents
· **Dangerous reactions** No dangerous reactions known.
· **Dangerous decomposition products:** none under normal use

## 11 Toxicological information

· **Additional toxicological information:**
Prolonged skin contact may cause skin irritation and/or dermatitis.

## 12 Ecological information

· **Ecotoxical effects:**
· **Behaviour in sewage processing plants:** The product can be mechanically separated.
· **General notes:** Do not allow product to reach ground water, water course or sewage system.

## 13 Disposal considerations

· **Product:**
· **Recommendation** Can be reused after reprocessing.
· **Waste disposal key:**
For this product no waste disposal key according the European Waste Catalogue (EWC) can be determined, as only the purpose of application defined by the user enables an allocation. The waste code number has to be determined in accordance with the local waste disposer.

· **Uncleaned packaging:**
· **Recommendation:**
Empty contaminated packagings thoroughly. They may be recycled after thorough and proper cleaning.



(Contd. on page 4)

# Safety Data Sheet
## according to 1907/2006/EC, Article 31

Printing date 17.03.2009 Revision: 17.03.2009

**Trade name: Klüberoil 4 UH1- 220N**

(Contd. of page 3)

## 14 Transport information

· **Land transport ADR/RID (cross-border)**
· **ADR/RID class:** -

· **Maritime transport IMDG:**
· **IMDG Class:** -

· **Air transport ICAO-TI and IATA-DGR:**
· **ICAO/IATA Class:** -

· **Transport/Additional information:**
Not classified as dangerous according to the above specifications.

* 
## 15 Regulatory information

· **Labelling according to EU guidelines:**
The product is not subject to classification according to the calculation methods of the "General Classification Guideline for Preparations of the EU" as issued in the latest valid version.

* 
## 16 Other information

This information is based on our present knowledge. However, this shall not constitute a guarantee for any specific product features and shall not establish a legally valid contractual relationship.

· **Department issuing MSDS:** Material Compliance Management
· **Contact:** +49(0)897876-1564
· *** Data compared to the previous version altered.**

# Certificate

## FOOD-GRADE LUBRICANT

Klüber Lubrication München KG herewith confirms that our product

**KLÜBEROIL 4 UH1-32 N**
**Art.No. 029037**

fulfills the USA requirements „Guidelines of section 21 CFR 178.3570 of FDA regulations“ as well as the former USDA H1 registration criteria.
Our product complies with LMBG and the European standard EN 1672, part 2.

Note:
CFR = Code of Federal Regulations.

FDA = Food and Drug Administration.

USDA = United States Department of Agriculture.

H1 = Lubricants suitable for an incidential and technically unavoidable contact with the food product.

LMBG = German law governing food products and associated ancillaries.

EN 1672 part 2 = Hygiene requirement of food-processing machines.

Munich, date 01.10.2001

Hans-Jürgen Blanke
General Management

Quality is our strong point

Dr. Günther Bodesheim
Head Quality/Environmental Protection and Occupational Safety

Electronic copy corresponding to the handwritten original.

United States Department of Agriculture

Food Safety and Inspection Service

Regulatory Programs
Building 306, BARC-East
Beltsville, MD 20705

December 21, 1994

Dr. D. Sohn
Kluber Lubrication
Geisenhausener Str. 7
D-81379 Munchen
Germany

Dear Dr. Sohn:

This is in reply to your request for compound authorization received on November 15, 1994 for your product Kluberpaste UH1 84-201.

This product is acceptable as a lubricant with incidental food contact for use in official establishments operating under the Federal meat and poultry products inspection program. Such compounds may be used on food processing equipment as a protective anti-rust film, as a release agent on gaskets or seals of tank closures, and as a lubricant for machine parts and equipment in locations in which there is potential exposure of the lubricated part to food. The amount used should be the minimum required to accomplish the desired technical effect on the equipment. If used as an anti-rust film, the compound must be removed from the equipment surface by washing or wiping, as required to leave the surface effectively free of any substance which could be transferred to food being processed.

The final granting of authorization for the proposed use of such compounds is the responsibility of the inspector in charge of the official plant. Technical assistance will be provided by the Compounds and Packaging Branch upon request.

Acceptance of compounds by this Department is in no way to be construed as an endorsement of the compounds or of any claims made for them.

If any change is made in the labeling information or formulation, the authorization for use in official plants becomes void immediately.

Sincerely,

John M. Damaré, Chief
Compounds and Packaging Branch
Product Assessment Division

United States Department of Agriculture

Food Safety and Inspection Service

Regulatory Programs
Building 306, BARC-East
Beltsville, MD 20705

August 13, 1991

Dr. D. Sohn
Kluber Lubrication
Geisenhausenerstrasse. 7
D-8000 Munchen 70, Germany

Dear Dr. Sohn:

This is in reply to your request for compound authorization received on July 02, 1991 for your product Kluberoil 4 UH1 220.

This product is acceptable as a lubricant with incidental food contact for use in official establishments operating under the Federal meat and poultry products inspection program. Such compounds may be used as lubricants or anti-rust films on equipment and machine parts in locations in which there is exposure of the lubricated parts to edible products. They may also be used as a release agent on gaskets or seals of tank closures. The amount used should be the minimum required to accomplish the desired technical effect on the equipment. If used as anti-rust films, the compounds must be removed from the equipment surface by washing or wiping as required to leave the surface effectively free of any substance which could be transferred to food being processed.

The final granting of authorization for the proposed use of such compounds is the responsibility of the inspector in charge of the official plant. Technical assistance will be provided by the Product Safety Branch upon request.

Acceptance of compounds by this Department is in no way to be construed as an endorsement of the compounds or of any claims made for them.

If any change is made in the labeling information or formulation, the authorization for use in official plants becomes void immediately.

Sincerely,

John M. Damaré

John M. Damaré, Chief
Product Safety Branch
Food Ingredient Assessment Division

RECEIVED

KLUBER LUBRICATION

United States Department of Agriculture

Food Safety and Inspection Service

Regulatory Programs
Building 306, BARC-East
Beltsville, MD 20705

August 26, 1992

RECEIVED

SEP 03 1992

KLUBER Lubrication

Dr. P. Wimmer
Kluber Lubrication
Geisenhausenerstrasse 7
D-8000 Munchen 70, Germany

Dear Dr. Wimmer:

This is in reply to your request for compound authorization received on July 24, 1992 for your product Klubersynth UH1 14-31.

This product is acceptable as a lubricant with incidental food contact for use in official establishments operating under the Federal meat and poultry products inspection program. Such compounds may be used as lubricants or anti-rust films on equipment and machine parts in locations in which there is exposure of the lubricated parts to edible products. They may also be used as a release agent on gaskets or seals of tank closures. The amount used should be the minimum required to accomplish the desired technical effect on the equipment. If used as anti-rust films, the compounds must be removed from the equipment surface by washing or wiping as required to leave the surface effectively free of any substance which could be transferred to food being processed.

The final granting of authorization for the proposed use of such compounds is the responsibility of the inspector in charge of the official plant. Technical assistance will be provided by the Compounds and Packaging Branch upon request.

Acceptance of compounds by this Department is in no way to be construed as an endorsement of the compounds or of any claims made for them.

If any change is made in the labeling information or formulation, the authorization for use in official plants becomes void immediately.

Sincerely,

John M. Damaré

John M. Damaré, Chief
Compounds and Packaging Branch
Product Assessment Division

# Material Safety Data Sheet
**According to 91/155 EEC**

Printing date 27.10.2006 Reviewed on 25.10.2006

* 
## 1 Identification of the substance/preparation and of the company/undertaking

· **Product details**

· **Trade name: Klübersynth UH1 14-31**

· **Article number:** 096029
· **Application of the substance / the preparation** Grease

· **Manufacturer/Supplier:**
KLÜBER LUBRICATION MÜNCHEN KG
Geisenhausenerstrasse 7
D-81379 München
Tel.: 0049 (0) 897876-0
Fax: 0049 (0) 897876-333

· **Further information obtainable from:** Material Compliance Management

· **Information in case of emergency:** 0049 (0) 89 7876 700 (24 hrs)

* 
## 2 Composition/information on ingredients

· **Chemical characterization**
· **Description:**
Synthetic hydrocarbon oil
ester oil
aluminium complex soap

| · **Dangerous components:** | | |
|---|---|---|
| | amine neutralized phosphoric acid ester of alkylated alcohols<br>Xi, N; R 36/38-51/53 | 0.25-1% |
| | Amine carboxylic acid compound<br>Xi, N; R 38-41-50 | 0.25-1% |
| CAS: 95-38-5<br>EINECS: 202-414-9 | 2-(2-heptadec-8-enyl-2-imidazolin-1-yl)ethanol<br>C, Xn, N; R 22-34-50/53 | 0.25-1% |

· **Additional information:** For the wording of the listed risk phrases refer to section 16.

## 3 Hazards identification

· **Hazard description:** Not applicable.
· **Information concerning particular hazards for human and environment:**
The product has to be labelled due to the calculation procedure of the "General Classification guideline for preparations of the EU" in the latest valid version.
R 52/53 Harmful to aquatic organisms, may cause long-term adverse effects in the aquatic environment.
· **Classification system:**
The classification is according to the latest editions of the EU-lists, and extended by company and literature data.

## 4 First-aid measures

· **After inhalation:** Supply fresh air; consult doctor in case of complaints.
· **After skin contact:** Wash off with soap and plenty of water.

(Contd. on page 2)

# Material Safety Data Sheet
**According to 91/155 EEC**

Printing date 27.10.2006 Reviewed on 25.10.2006

**Trade name: Klübersynth UH1 14-31**

(Contd. of page 1)

· **After eye contact:**
Rinse opened eye for several minutes under running water. If symptoms persist, consult a doctor.
· **After swallowing:** If symptoms persist consult doctor.

## 5 Fire-fighting measures

· **Suitable extinguishing agents:**
Water haze
Foam
Fire-extinguishing powder
Carbon dioxide
· **For safety reasons unsuitable extinguishing agents:** Water with full jet
· **Special hazards caused by the substance, its products of combustion or resulting gases:**
In case of fire, the following can be released:
Carbon monoxide (CO)
Hydrocarbons
· **Protective equipment:**
Do not inhale explosion gases or combustion gases.
Standard procedure for chemical fires.
· **Additional information**
Cool endangered receptacles with water spray.
Dispose of fire debris and contaminated fire fighting water in accordance with official regulations.

## 6 Accidental release measures

· **Person-related safety precautions:** Not required.
· **Measures for environmental protection:** Do not allow to enter sewers/ surface or ground water.
· **Measures for cleaning/collecting:**
Pick up mechanically.
Dispose of the material collected according to regulations.

## 7 Handling and storage

· **Handling:**
· **Information for safe handling:** No special measures required.
· **Information about fire - and explosion protection:** No special measures required.

· **Storage:**
· **Requirements to be met by storerooms and receptacles:**
Store in cool, dry conditions in well sealed receptacles.
· **Information about storage in one common storage facility:**
Store away from foodstuffs.
Store away from oxidizing agents.
· **Further information about storage conditions:** None.

## 8 Exposure controls/personal protection

· **Additional information about design of technical facilities:** No further data; see item 7.

· **Ingredients with limit values that require monitoring at the workplace:**
The product does not contain any relevant quantities of materials with critical values that have to be monitored at the workplace.
· **Additional information:** The lists valid during the making were used as basis.

· **Personal protective equipment:**
· **General protective and hygienic measures:**
Avoid close or long term contact with the skin.

(Contd. on page 3)

# Material Safety Data Sheet
**According to 91/155 EEC**

Printing date 27.10.2006 Reviewed on 25.10.2006

**Trade name: Klübersynth UH1 14-31**

(Contd. of page 2)

Immediately remove all soiled and contaminated clothing
Be sure to clean skin thoroughly after work and before breaks.
· **Respiratory protection:** Not required.
· **Protection of hands:** Preventive skin protection by use of skin-protecting agents is recommended.
· **Eye protection:** Not required.

* 
## 9 Physical and chemical properties

· **General Information**

| | |
|---|---|
| **Form:** | Pasty |
| **Colour:** | Whitish Yellow |
| **Odour:** | Product specific |

· **Change in condition**
**Drip point:** > 220°C (DIN ISO 2176)

· **Flash point:** not applicable

· **Danger of explosion:** Product does not present an explosion hazard.

· **Density at 20°C:** ~ 0.90 g/cm³

· **Solubility in / Miscibility with water:** Insoluble.

## 10 Stability and reactivity

· **Thermal decomposition / conditions to be avoided:**
No decomposition if used and stored according to specifications.
· **Materials to be avoided:** oxidizing agents
· **Dangerous reactions** No dangerous reactions known.
· **Dangerous decomposition products:** none under normal use

## 11 Toxicological information

· **Additional toxicological information:**
Prolonged skin contact may cause skin irritation and/or dermatitis.

* 
## 12 Ecological information

· **Ecotoxical effects:**
· **Behaviour in sewage processing plants:** The product can be mechanically separated.
· **General notes:** Do not allow product to reach ground water, water course or sewage system.

## 13 Disposal considerations

· **Product:**
· **Recommendation** Can be incinerated in accordance with local and national regulations.
· **Waste disposal key:**
For this product no waste disposal key according the European Waste Catalogue (EWC) can be determined, as only the purpose of application defined by the user enables an allocation. The waste code number has to be determined in accordance with the local waste disposer.

(Contd. on page 4)

# Material Safety Data Sheet
**According to 91/155 EEC**

Printing date 27.10.2006 Reviewed on 25.10.2006

**Trade name: Klübersynth UH1 14-31**

(Contd. of page 3)

· **Uncleaned packaging:**
· **Recommendation:**
Empty contaminated packagings thoroughly. They may be recycled after thorough and proper cleaning.

## 14 Transport information

· **Land transport ADR/RID (cross-border)**
· **ADR/RID class:** -

· **Maritime transport IMDG:**
· **IMDG Class:** -

· **Air transport ICAO-TI and IATA-DGR:**
· **ICAO/IATA Class:** -

· **Transport/Additional information:**
Not classified as dangerous according to the above specifications.

## 15 Regulatory information

· **Labelling according to EU guidelines:**
The product has been classified and marked in accordance with EU Directives / Ordinance on Hazardous Materials.

· **Risk phrases:**
52/53 Harmful to aquatic organisms, may cause long-term adverse effects in the aquatic environment.

· **Safety phrases:**
61 Avoid release to the environment. Refer to special instructions/safety data sheets.

## 16 Other information

This information is based on our present knowledge. However, this shall not constitute a guarantee for any specific product features and shall not establish a legally valid contractual relationship.

· **Relevant R-phrases**
22 Harmful if swallowed.
34 Causes burns.
36/38 Irritating to eyes and skin.
38 Irritating to skin.
41 Risk of serious damage to eyes.
50 Very toxic to aquatic organisms.
50/53 Very toxic to aquatic organisms, may cause long-term adverse effects in the aquatic environment.
51/53 Toxic to aquatic organisms, may cause long-term adverse effects in the aquatic environment.

· **Department issuing MSDS:** Material Compliance Management
· **Contact:** +49(0)897876-1564
· *** Data compared to the previous version altered.**

**Doc No: 100241-1**

February 25, 2004

Luciana Husfeld
KLUBER LUBRICATION MUNCHEN KG.
GEISENHAUSENER STR. 7
81379 MÜNCHEN
GERMANY

RE: Klübersynth® UH1 14-31
Category Code: H1
NSF Registration No. 056356

Dear Luciana Husfeld:

NSF has processed the application for Registration of **Klübersynth® UH1 14-31** to *the NSF Registration Guidelines for Proprietary Substances and Nonfood Compounds (*2004*)*, which are available at www.nsf.org/usda. The NSF Nonfood Compounds Registration Program is a continuation of the USDA product approval and listing program, which is based on meeting regulatory requirements including FDA 21 CFR for appropriate use, ingredient and labeling.

**This product is acceptable as a lubricant with incidental food contact (H1) for use in and around food processing areas. Such compounds may be used on food processing equipment as a protective anti-rust film, as a release agent on gaskets or seals of tank closures, and as a lubricant for machine parts and equipment in locations in which there is a potential exposure of the lubricated part to food. The amount used should be the minimum required to accomplish the desired technical effect on the equipment. If used as an anti-rust film, the compound must be removed from the equipment surface by washing or wiping, as required to leave the surface effectively free of any substance which could be transferred to food being processed.**

NSF Registration of this product is current when the NSF Registration Number, Category Code, and Registration Mark appear on the NSF-approved product label, and the registered product name is included in the current NSF White Book Listing of Nonfood Compounds at the NSF website (http://www.nsf.org/usda). The NSF Registration Mark can be downloaded from the NSF website, at http://www.nsf.org/mark/download_marks.html.

NSF Listing of all registered Nonfood compounds by NSF International is not an endorsement of those compounds, or of any performance or efficacy claims made by the manufacturer.

Registration status may be verified at any time via the NSF web site, at http://www.nsf.org/usda. Changes in formulation or label, without the prior written consent of NSF, will void registration, and will supersede the on-line listing.

Sincerely,

Carmen Grindatti
NSF Nonfood Compounds Registration Program

Company No: N04391

Voir documents suivants. Siehe folgende Dokumente. See following documents

Professional Milling and Handling of Powders

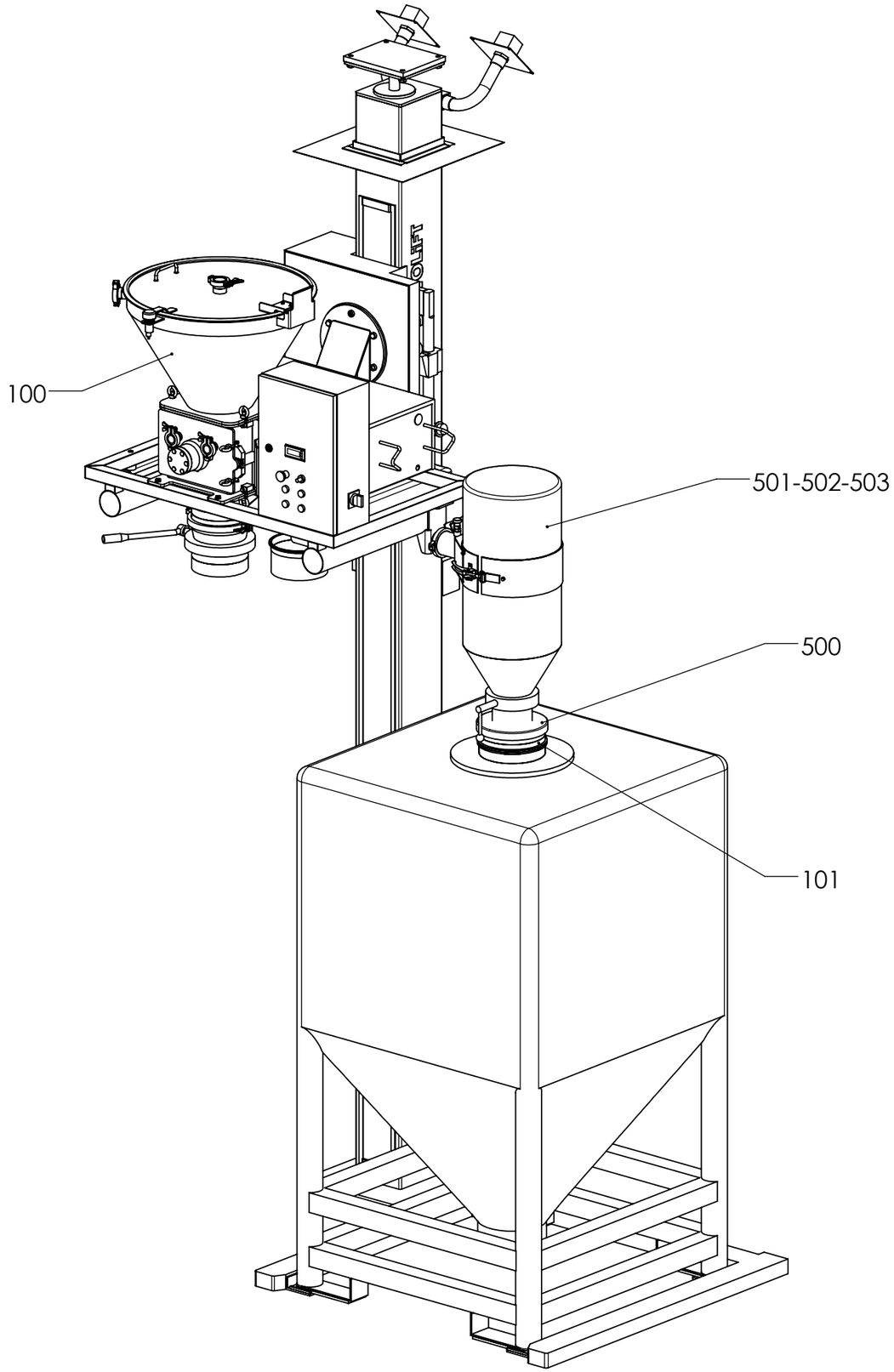


| Position | N° article<br>Artikel Nr<br>Item number | Certificat Matière<br>Materialzertifikate<br>Materials certificates<br>EN-10204-3.1B / FDA | Certificats d'états de surface<br>Zertifikate für Oberflächenqualität<br>Surface quality certificates |
|---|---|---|---|
| 100 | 465107-CMA | X | X |
| 101 | 465220-CMA | X | X |
| 500 | 443386 | X | 0 |
| 501 | 438420 | X | 0 |
| 502 | 461236 | X | 0 |
| 503 | 461512 | X | 0 |

X = livré / geliefert / delivered
0 = non livré / ungeliefert / undelivered

| Dimensions without tolerance [mm] | above | | 6 | 30 | 120 | 400 | 1000 |
|---|---|---|---|---|---|---|---|
| | up to | 6 | 30 | 120 | 400 | 1000 | 2000 |
| Machining: ISO 2768-m | | ±0.10 | ±0.20 | ±0.30 | ±0.50 | ±0.80 | ±1.20 |
| Welding Assembly: ISO 2768-c | | ±0.30 | ±0.50 | ±0.80 | ±1.20 | ±2.00 | ±3.00 |

PRO-11-0078 / MF-3

MATERIAL : N/A

| Scale | Similar | Designed | 10/06/2011 | thle |
|---|---|---|---|---|
| % | | Controlled | 02/09/2011 | thle |
| | Weight [kg] | Revised | 02/09/2011 | thle |
| A3 | N/A | Atex | | |

Any and all information received by you from us shall be held and kept confidential and shall not be disclosed by you to any third party except with prior written consent of FREWITT SA.

Frewitt SA: Milling and Handling of Powders
P.O.B. 615, CH-1701 Fribourg, SWITZERLAND
tel: +41 26 460 74 00 / fax: +41 26 460 74 01
info@frewitt.com / www.frewitt.com

465036-CMA

| Page | Ver. |
|---|---|
| 1/1 | A |

**Client** **Kunde:** **Customer:**
**NOVARTIS SINGAPORE PHARMACEUTICAL**
**SG-Singapore**

**N° Série:** **Serien-Nr.** **Serial Nr.**
11007821034

**Values are automatically taken from the measuring instrument and can not be changed**

| | |
|---|---|
| Appareil de mesure / Messapparat / Measurin unit : | Niton XLt 898 W Y Alloy Analizer |
| N° série / Serien-Nr. / Serial Nr. : | 8251 |
| N° Certificat / Zertifikat-Nr. / Certificate Nr. : | 35EN-04292005-IARM-P |

**FDA certificates, Drawing: 465036-CMA**

| | | | | | |
|---|---|---|---|---|---|
| 500 | EPDM | Art. | 443386 | Document N° / Dokument Nr. / Document No : | 48620-1 |
| 501 | Silicone | Art. | 438420 | Document N° / Dokument Nr. / Document No : | 136546-1 |
| 502 | Silicone | Art. | 461236 | Document N° / Dokument Nr. / Document No : | 136549-1 |
| 503 | Silicone | Art. | 461512 | Document N° / Dokument Nr. / Document No : | 136546-1 |

## Pos.100 Dessin / Zeichnung / Drawing: 465107-CMA

| Mesure N° / Mass Nr. / Measure Nr. | Matière / Material / Material | % Sb | Sn | Pd | Ag | Al | Mo | Nb | Zr | Bi | Pb | Se | W | Zn | Cu | Ni | Co | Fe | Mn | Cr | V | Ti |
|---|---|---|---|---|---|---|---|---|---|---|---|---|---|---|---|---|---|---|---|---|---|---|

**Certificats FDA / FDA Zertificate / FDA certificates (Drawing: 465107-CMA)**

| | | | | | |
|---|---|---|---|---|---|
| 500 | EPDM | Art. | 423856 | Document N° / Dokument Nr. / Document No : | 28247-5 |

## Pos.100 Dessin / Zeichnung / Drawing: 465211-CMA

| Mesure N° / Mass Nr. / Measure Nr. | Matière / Material / Material | % Sb | Sn | Pd | Ag | Al | Mo | Nb | Zr | Bi | Pb | Se | W | Zn | Cu | Ni | Co | Fe | Mn | Cr | V | Ti |
|---|---|---|---|---|---|---|---|---|---|---|---|---|---|---|---|---|---|---|---|---|---|---|
| 1 | 1.4404 / SS316L | 0.06 | 0.01 | 0.01 | 0.13 | 0.00 | 2.55 | 0.02 | 0.00 | 0.00 | 0.00 | 0.00 | 0.02 | 0.04 | 0.35 | 11.61 | 0.11 | 64.65 | 1.60 | 18.73 | 0.08 | 0.01 |

### Pos.100 Dessin / Zeichnung / Drawing: 465204-CMA

| N° / Mass Nr. / Measure | Matière / Material / Material | % Sb | Sn | Pd | Ag | Al | Mo | Nb | Zr | Bi | Pb | Se | W | Zn | Cu | Ni | Co | Fe | Mn | Cr | V | Ti |
|---|---|---|---|---|---|---|---|---|---|---|---|---|---|---|---|---|---|---|---|---|---|---|
| 1 | 1.4404 / SS316L | 0.08 | 0.01 | 0.01 | 0.11 | 0.00 | 2.17 | 0.00 | 0.00 | 0.00 | 0.00 | 0.00 | 0.04 | 0.04 | 0.25 | 9.71 | 0.41 | 69.17 | 1.02 | 16.86 | 0.09 | 0.00 |
| 2 | 1.4404 / SS316L | 0.00 | 0.01 | 0.00 | 0.11 | 0.00 | 2.19 | 0.00 | 0.00 | 0.00 | 0.00 | 0.00 | 0.00 | 0.08 | 0.43 | 10.28 | 0.00 | 68.97 | 1.22 | 16.64 | 0.05 | 0.00 |
| 3 | 1.4404 / SS316L | 0.00 | 0.04 | 0.00 | 0.07 | 0.00 | 2.14 | 0.00 | 0.00 | 0.00 | 0.01 | 0.00 | 0.02 | 0.01 | 0.35 | 10.38 | 0.45 | 68.38 | 1.28 | 16.81 | 0.05 | 0.00 |
| 4 | 1.4404 / SS316L | 0.03 | 0.01 | 0.00 | 0.12 | 0.00 | 2.16 | 0.01 | 0.00 | 0.00 | 0.00 | 0.00 | 0.00 | 0.07 | 0.49 | 10.37 | 0.00 | 69.11 | 1.04 | 16.52 | 0.07 | 0.00 |
| 5 | 1.4404 / SS316L | 0.00 | 0.01 | 0.00 | 0.08 | 0.00 | 2.71 | 0.01 | 0.01 | 0.00 | 0.00 | 0.00 | 0.01 | 0.09 | 0.26 | 12.91 | 0.01 | 65.48 | 1.80 | 16.58 | 0.03 | 0.00 |
| 6 | 1.4404 / SS316L | 0.04 | 0.03 | 0.00 | 0.13 | 0.00 | 2.71 | 0.02 | 0.00 | 0.00 | 0.00 | 0.00 | 0.02 | 0.06 | 0.37 | 12.54 | 0.11 | 65.33 | 1.67 | 16.91 | 0.05 | 0.00 |

### Pos.101 Dessin / Zeichnung / Drawing: 465208-CMA

| N° / Mass Nr. / Measure | Matière / Material / Material | % Sb | Sn | Pd | Ag | Al | Mo | Nb | Zr | Bi | Pb | Se | W | Zn | Cu | Ni | Co | Fe | Mn | Cr | V | Ti |
|---|---|---|---|---|---|---|---|---|---|---|---|---|---|---|---|---|---|---|---|---|---|---|
| 1 | 1.4404 / SS316L | 0.00 | 0.00 | 0.00 | 0.10 | 0.00 | 2.20 | 0.01 | 0.00 | 0.00 | 0.01 | 0.00 | 0.07 | 0.06 | 0.46 | 9.84 | 0.25 | 67.87 | 1.84 | 17.23 | 0.06 | 0.00 |
| 2 | 1.4404 / SS316L | 0.08 | 0.03 | 0.00 | 0.12 | 0.00 | 2.59 | 0.01 | 0.00 | 0.00 | 0.00 | 0.00 | 0.04 | 0.01 | 0.21 | 12.87 | 0.36 | 65.49 | 1.24 | 16.86 | 0.09 | 0.00 |
| 3 | 1.4404 / SS316L | 0.00 | 0.02 | 0.00 | 0.13 | 0.00 | 2.21 | 0.01 | 0.00 | 0.00 | 0.01 | 0.00 | 0.00 | 0.02 | 0.28 | 11.89 | 0.07 | 67.09 | 1.35 | 16.87 | 0.04 | 0.00 |

**Certificats FDA / FDA Zertificate / FDA certificates - Drawing 465211-CMA**

| | | | | | |
|---|---|---|---|---|---|
| 500 | Silicone | Art. | 410990 | Document N° / Dokument Nr. / Document No : | 17180-1 |
| 501 | Silicone | Art. | 409290 | Document N° / Dokument Nr. / Document No : | 26019-4 |

## Pos.101 — Dessin / Zeichnung / Drawing: 465117-CMA

| Mesure N° / Mass Nr. / Measure Nr. | Matière / Material / Material | % Sb | Sn | Pd | Ag | Al | Mo | Nb | Zr | Bi | Pb | Se | W | Zn | Cu | Ni | Co | Fe | Mn | Cr | V | Ti |
|---|---|---|---|---|---|---|---|---|---|---|---|---|---|---|---|---|---|---|---|---|---|---|
| 1 | 1.4404 / SS316L | 0.1 | 0.23 | 0 | 0.13 | 0.00 | 2.16 | 0.01 | 0.00 | 0.00 | 0.00 | 0.00 | 0.06 | 0.02 | 0.45 | 10.22 | 0.09 | 68.80 | 0.99 | 16.68 | 0.04 | 0.02 |
| 2 | 1.4404 / SS316L | 0 | 0.2 | 0 | 0.12 | 0.00 | 2.19 | 0.00 | 0.00 | 0.00 | 0.00 | 0.00 | 0.05 | 0.04 | 0.57 | 10.09 | 0.33 | 68.16 | 1.12 | 17.06 | 0.07 | 0.01 |

## Pos.100 — Dessin / Zeichnung / Drawing: 465116-CMA

| N° / Mass Nr. / Measure | Matière / Material / Material | % Sb | Sn | Pd | Ag | Al | Mo | Nb | Zr | Bi | Pb | Se | W | Zn | Cu | Ni | Co | Fe | Mn | Cr | V | Ti |
|---|---|---|---|---|---|---|---|---|---|---|---|---|---|---|---|---|---|---|---|---|---|---|
| 1 | 1.4404 / SS316L | 0 | 0 | 0 | 0.13 | 0.00 | 2.76 | 0.00 | 0.00 | 0.00 | 0.00 | 0.00 | 0.00 | 0.08 | 0.11 | 12.94 | 0.82 | 64.91 | 1.24 | 16.95 | 0.06 | 0.00 |
| 2 | 1.4404 / SS316L | 0.1 | 0 | 0 | 0.09 | 0.00 | 2.61 | 0.01 | 0.00 | 0.00 | 0.00 | 0.00 | 0.04 | 0.01 | 0.14 | 12.65 | 0.40 | 65.38 | 1.18 | 17.31 | 0.05 | 0.01 |
| 3 | 1.4404 / SS316L | 0.05 | 0.01 | 0.01 | 0.12 | 0.00 | 2.18 | 0.02 | 0.00 | 0.00 | 0.00 | 0.00 | 0.07 | 0.05 | 0.42 | 9.96 | 0.01 | 68.58 | 1.42 | 17.01 | 0.08 | 0.00 |
| 4 | 1.4404 / SS316L | 0 | 0.06 | 0.01 | 0.12 | 0.00 | 2.17 | 0.01 | 0.00 | 0.00 | 0.00 | 0.00 | 0.04 | 0.04 | 0.36 | 10.36 | 0.00 | 68.46 | 1.30 | 17.00 | 0.07 | 0.00 |

## Pos.101 — Dessin / Zeichnung / Drawing: 465121-CMA

| N° / Mass Nr. / Measure | Matière / Material / Material | % Sb | Sn | Pd | Ag | Al | Mo | Nb | Zr | Bi | Pb | Se | W | Zn | Cu | Ni | Co | Fe | Mn | Cr | V | Ti |
|---|---|---|---|---|---|---|---|---|---|---|---|---|---|---|---|---|---|---|---|---|---|---|
| 1 | 1.4404 / SS316L | 0.06 | 0.03 | 0 | 0.15 | 0.00 | 2.07 | 0.00 | 0.00 | 0.00 | 0.00 | 0.00 | 0.01 | 0.05 | 0.11 | 10.15 | 0.00 | 68.69 | 1.08 | 17.54 | 0.04 | 0.00 |
| 2 | 1.4404 / SS316L | 0.09 | 0 | 0 | 0.15 | 0.00 | 2.39 | 0.00 | 0.00 | 0.00 | 0.00 | 0.01 | 0.13 | 0.09 | 0.27 | 12.13 | 0.52 | 65.69 | 1.69 | 16.74 | 0.09 | 0.00 |
| 3 | 1.4404 / SS316L | 0.17 | 0.03 | 0 | 0.12 | 0.00 | 2.50 | 0.00 | 0.00 | 0.01 | 0.00 | 0.01 | 0.16 | 0.12 | 0.22 | 13.14 | 0.01 | 65.16 | 1.83 | 16.38 | 0.13 | 0.00 |
| 4 | 1.4438/SS317L | 0.02 | 0.05 | 0 | 0.09 | 0.00 | 2.70 | 0.00 | 0.00 | 0.00 | 0.00 | 0.00 | 0.34 | 0.05 | 0.31 | 13.35 | 0.00 | 64.38 | 1.62 | 16.95 | 0.12 | 0.00 |
| 5 | 1.4404 / SS316L | 0.07 | 0.04 | 0.01 | 0.13 | 0.00 | 2.72 | 0.00 | 0.00 | 0.00 | 0.00 | 0.00 | 0.38 | 0.03 | 0.43 | 13.16 | 0.00 | 63.75 | 1.99 | 17.17 | 0.10 | 0.00 |

### Certificats FDA / FDA Zertificate / FDA certificates - Drawing 465117-CMA

| | | | | | |
|---|---|---|---|---|---|
| 500 | Silicone | Art. | 433239 | Document N° / Dokument Nr. / Document No : | 21871-0 |
| 501 | Gylon | Art. | 405367 | Document N° / Dokument Nr. / Document No : | 13876-15 |
| 502 | Silicone | Art. | 450611 | Document N° / Dokument Nr. / Document No : | 52596-0 |

## Pos.102 — Dessin / Zeichnung / Drawing: 465214-CMA

| Mesure N° / Mass Nr. / Measure Nr. | Matière / Material / Material | % Sb | Sn | Pd | Ag | Al | Mo | Nb | Zr | Bi | Pb | Se | W | Zn | Cu | Ni | Co | Fe | Mn | Cr | V | Ti |
|---|---|---|---|---|---|---|---|---|---|---|---|---|---|---|---|---|---|---|---|---|---|---|
| 1 | 1.4404 / SS316L | 0 | 0.05 | 0 | 0.12 | 0.00 | 2.15 | 0.00 | 0.00 | 0.00 | 0.00 | 0.00 | 0.03 | 0.05 | 0.47 | 10.21 | 0.25 | 67.71 | 1.76 | 17.15 | 0.05 | 0.01 |

### Certificats FDA / FDA Zertificate / FDA certificates - Drawing 465214-CMA

| | | | | | |
|---|---|---|---|---|---|
| 500 | EPDM | Art. | 427424 | Document N° / Dokument Nr. / Document No : | 14257-0 |

## Pos.103 — Dessin / Zeichnung / Drawing: 465173-CMA

| Mesure N° / Mass Nr. / Measure Nr. | Matière / Material / Material | % Sb | Sn | Pd | Ag | Al | Mo | Nb | Zr | Bi | Pb | Se | W | Zn | Cu | Ni | Co | Fe | Mn | Cr | V | Ti |
|---|---|---|---|---|---|---|---|---|---|---|---|---|---|---|---|---|---|---|---|---|---|---|
| 1 | 1.4404 / SS316L | 0.09 | 0.04 | 0.00 | 0.15 | 0.00 | 2.17 | 0.01 | 0.00 | 0.00 | 0.00 | 0.00 | 0.11 | 0.03 | 0.80 | 10.29 | 0.20 | 69.31 | 0.77 | 16.01 | 0.02 | 0.00 |
| 2 | 1.4404 / SS316L | 0.03 | 0.04 | 0.00 | 0.15 | 0.00 | 2.15 | 0.00 | 0.00 | 0.00 | 0.01 | 0.00 | 0.03 | 0.03 | 0.28 | 10.59 | 0.03 | 67.70 | 2.00 | 16.95 | 0.01 | 0.00 |
| 3 | 1.4404 / SS316L | 0.00 | 0.01 | 0.00 | 0.13 | 0.00 | 2.11 | 0.00 | 0.00 | 0.00 | 0.00 | 0.00 | 0.09 | 0.02 | 0.31 | 9.93 | 0.59 | 67.61 | 1.99 | 17.18 | 0.05 | 0.00 |
| 4 | 1.4404 / SS316L | 0.01 | 0.10 | 0.00 | 0.13 | 0.00 | 2.20 | 0.01 | 0.00 | 0.00 | 0.00 | 0.00 | 0.05 | 0.03 | 0.28 | 10.36 | 0.00 | 67.77 | 1.92 | 17.07 | 0.06 | 0.00 |
| 5 | 1.4404 / SS316L | 0.00 | 0.00 | 0.00 | 0.12 | 0.00 | 2.23 | 0.00 | 0.00 | 0.00 | 0.00 | 0.00 | 0.00 | 0.04 | 0.37 | 10.75 | 0.07 | 69.80 | 1.16 | 15.38 | 0.07 | 0.00 |
| 6 | 1.4404 / SS316L | 0.07 | 0.07 | 0.02 | 0.08 | 0.00 | 2.19 | 0.00 | 0.00 | 0.00 | 0.01 | 0.01 | 0.06 | 0.11 | 0.43 | 10.47 | 0.10 | 69.11 | 0.92 | 16.28 | 0.08 | 0.00 |

## Pos.104 — Dessin / Zeichnung / Drawing: 465174-CMA

| Mesure N° / Mass Nr. / Measure Nr. | Matière / Material / Material | % Sb | Sn | Pd | Ag | Al | Mo | Nb | Zr | Bi | Pb | Se | W | Zn | Cu | Ni | Co | Fe | Mn | Cr | V | Ti |
|---|---|---|---|---|---|---|---|---|---|---|---|---|---|---|---|---|---|---|---|---|---|---|
| 1 | 1.4404 / SS316L | 0 | 0.01 | 0 | 0.09 | 0.00 | 2.15 | 0.03 | 0.00 | 0.00 | 0.00 | 0.00 | 0.04 | 0.06 | 0.34 | 10.09 | 0.00 | 68.49 | 1.25 | 17.39 | 0.04 | 0.00 |
| 2 | 1.4404 / SS316L | 0 | 0 | 0 | 0.11 | 0.00 | 2.12 | 0.02 | 0.00 | 0.00 | 0.00 | 0.00 | 0.06 | 0.02 | 0.3 | 10.55 | 0.03 | 68.64 | 1.26 | 16.83 | 0.06 | 0.01 |
| 3 | 1.4404 / SS316L | 0.06 | 0.05 | 0 | 0.14 | 0.00 | 2.76 | 0.02 | 0.00 | 0.00 | 0.00 | 0.00 | 0.02 | 0.05 | 0.36 | 11.32 | 0.03 | 66.01 | 1.77 | 17.34 | 0.04 | 0.01 |
| 4 | 1.4404 / SS316L | 0.07 | 0.07 | 0 | 0.15 | 0.00 | 2.21 | 0.03 | 0.00 | 0.00 | 0.00 | 0.00 | 0.04 | 0.03 | 0.33 | 10.63 | 0.35 | 67.96 | 0.98 | 17.07 | 0.07 | 0.01 |
| 5 | 1.4404 / SS316L | 0.06 | 0 | 0.01 | 0.1 | 0.00 | 2.79 | 0.01 | 0.00 | 0.00 | 0.00 | 0.00 | 0.03 | 0.03 | 0.4 | 11 | 0.21 | 66.57 | 1.58 | 17.14 | 0.07 | 0.00 |
| 6 | 1.4404 / SS316L | 0 | 0.04 | 0.01 | 0.13 | 0.00 | 2.24 | 0.02 | 0.00 | 0.00 | 0.02 | 0.00 | 0.09 | 0.04 | 0.3 | 10.31 | 0.48 | 67.83 | 1.34 | 17.12 | 0.02 | 0.00 |
| 7 | 1.4404 / SS316L | 0.08 | 0.02 | 0.01 | 0.13 | 0.00 | 2.18 | 0.01 | 0.00 | 0.00 | 0.00 | 0.00 | 0.03 | 0.05 | 0.9 | 10.28 | 0.00 | 69.09 | 0.98 | 16.22 | 0.01 | 0.00 |

**Certificats FDA / FDA Zertificate / FDA certificates - Drawing 465174-CMA**

| | | | | | |
|---|---|---|---|---|---|
| 500 | PTFE/Silicone | Art. | 455314 | Document N° / Dokument Nr. / Document No : | 114604-1 |

## Pos.105 — Dessin / Zeichnung / Drawing: 465165-CMA

| Mesure N° / Mass Nr. / Measure Nr. | Matière / Material / Material | % Sb | Sn | Pd | Ag | Al | Mo | Nb | Zr | Bi | Pb | Se | W | Zn | Cu | Ni | Co | Fe | Mn | Cr | V | Ti |
|---|---|---|---|---|---|---|---|---|---|---|---|---|---|---|---|---|---|---|---|---|---|---|
| 1 | 1.4404 / SS316L | 0.00 | 0.03 | 0.00 | 0.07 | 0.00 | 2.19 | 0.01 | 0.00 | 0.00 | 0.00 | 0.00 | 0.02 | 0.01 | 0.80 | 10.22 | 0.07 | 69.41 | 0.77 | 16.35 | 0.04 | 0.00 |
| 2 | 1.4404 / SS316L | 0.05 | 0.07 | 0.00 | 0.12 | 0.00 | 2.18 | 0.02 | 0.00 | 0.00 | 0.00 | 0.00 | 0.07 | 0.05 | 0.22 | 10.17 | 0.09 | 68.23 | 1.24 | 17.44 | 0.05 | 0.00 |

## Pos.106 — Dessin / Zeichnung / Drawing: 417089-CMA

| Mesure N° / Mass Nr. / Measure Nr. | Matière / Material / Material | % Sb | Sn | Pd | Ag | Al | Mo | Nb | Zr | Bi | Pb | Se | W | Zn | Cu | Ni | Co | Fe | Mn | Cr | V | Ti |
|---|---|---|---|---|---|---|---|---|---|---|---|---|---|---|---|---|---|---|---|---|---|---|
| 1 | 1.4571/SS316Ti | 0.00 | 0.01 | 0.00 | 0.15 | 0.00 | 2.15 | 0.00 | 0.00 | 0.00 | 0.00 | 0.00 | 0.00 | 0.04 | 0.28 | 11.46 | 0.00 | 66.55 | 1.79 | 17.08 | 0.10 | 0.39 |
| 2 | IRON/CS | 0.05 | 0.03 | 0.00 | 0.11 | 0.00 | 0.03 | 0.00 | 0.00 | 0.00 | 0.00 | 0.00 | 0.00 | 0.45 | 0.19 | 0.50 | 0.00 | 97.69 | 0.73 | 0.16 | 0.01 | 0.05 |

## Pos.107 — Dessin / Zeichnung / Drawing: 465126-CMA

| Mesure N° / Mass Nr. / Measure Nr. | Matière / Material / Material | % Sb | Sn | Pd | Ag | Al | Mo | Nb | Zr | Bi | Pb | Se | W | Zn | Cu | Ni | Co | Fe | Mn | Cr | V | Ti |
|---|---|---|---|---|---|---|---|---|---|---|---|---|---|---|---|---|---|---|---|---|---|---|
| 1 | 1.4404 / SS316L | 0.02 | 0.05 | 0 | 0.13 | 0.00 | 2.08 | 0.01 | 0.00 | 0.00 | 0.01 | 0.00 | 0.00 | 0.08 | 0.68 | 9.66 | 0.33 | 67.11 | 2.13 | 17.65 | 0.05 | 0.00 |
| 2 | 1.4404 / SS316L | 0.1 | 0.01 | 0.01 | 0.12 | 0.00 | 2.09 | 0.01 | 0.00 | 0.00 | 0.00 | 0.00 | 0.05 | 0.06 | 0.28 | 10.23 | 0.10 | 67.09 | 1.76 | 17.99 | 0.08 | 0.00 |

**Certificats FDA / FDA Zertificate / FDA certificates - Drawing 465126-CMA**

| | | | | | |
|---|---|---|---|---|---|
| 500 | Silicone | Art. | 414955 | Document N° / Dokument Nr. / Document No : | 13882-0 |
| 501 | Gylon | Art. | 402141 | Document N° / Dokument Nr. / Document No : | 13879-14 |

## Pos.108 — Dessin / Zeichnung / Drawing: 465076-CMA

| Mesure N° / Mass Nr. / Measure Nr. | Matière / Material / Material | % Sb | Sn | Pd | Ag | Al | Mo | Nb | Zr | Bi | Pb | Se | W | Zn | Cu | Ni | Co | Fe | Mn | Cr | V | Ti |
|---|---|---|---|---|---|---|---|---|---|---|---|---|---|---|---|---|---|---|---|---|---|---|
| 1 | 1.4404 / SS316L | 0.05 | 0.01 | 0 | 0.11 | 0.00 | 2.03 | 0.01 | 0.00 | 0.00 | 0.00 | 0.00 | 0.00 | 0.04 | 0.49 | 10.51 | 0.00 | 67.86 | 1.99 | 16.84 | 0.05 | 0.00 |
| 2 | 1.4404 / SS316L | 0.06 | 0.02 | 0.01 | 0.08 | 0.00 | 2.15 | 0.00 | 0.00 | 0.00 | 0.00 | 0.00 | 0.06 | 0.02 | 0.37 | 9.99 | 0.18 | 68.67 | 1.59 | 16.72 | 0.07 | 0.00 |

**Certificats FDA / FDA Zertificate / FDA certificates - Drawing 465076-CMA**

| | | | | | |
|---|---|---|---|---|---|
| 500 | Silicone | Art. | 414955 | Document N° / Dokument Nr. / Document No : | 13882-0 |
| 501 | Gylon | Art. | 402141 | Document N° / Dokument Nr. / Document No : | 13879-14 |

## Pos.109 — Dessin / Zeichnung / Drawing: 401402-CMA

| Mesure N° / Mass Nr. / Measure Nr. | Matière / Material / Material | % Sb | Sn | Pd | Ag | Al | Mo | Nb | Zr | Bi | Pb | Se | W | Zn | Cu | Ni | Co | Fe | Mn | Cr | V | Ti |
|---|---|---|---|---|---|---|---|---|---|---|---|---|---|---|---|---|---|---|---|---|---|---|
| 1 | 1.4404 / SS316L | 0.00 | 0.00 | 0.00 | 0.12 | 0.00 | 2.30 | 0.02 | 0.00 | 0.00 | 0.00 | 0.00 | 0.00 | 0.01 | 0.39 | 11.22 | 0.00 | 68.65 | 1.41 | 15.81 | 0.04 | 0.02 |
| 2 | 1.4404 / SS316L | 0.00 | 0.00 | 0.00 | 0.16 | 0.00 | 2.25 | 0.01 | 0.00 | 0.00 | 0.00 | 0.00 | 0.02 | 0.08 | 0.42 | 10.85 | 0.23 | 68.44 | 1.86 | 15.58 | 0.08 | 0.00 |
| 3 | 1.4404 / SS316L | 0.00 | 0.05 | 0.01 | 0.12 | 0.00 | 2.75 | 0.00 | 0.00 | 0.02 | 0.00 | 0.00 | 0.00 | 0.08 | 0.38 | 12.95 | 0.00 | 64.49 | 1.74 | 17.30 | 0.10 | 0.00 |

| Pos.110 | | | Dessin / Zeichnung / Drawing: 20220 | | | | | | | | | | | | | | | | | | | | |
|---|---|---|---|---|---|---|---|---|---|---|---|---|---|---|---|---|---|---|---|---|---|---|---|
| Mesure N° Mass Nr. Measure Nr. | | Matière Material Material | % | | | | | | | | | | | | | | | | | | | | |
| | | | Sb | Sn | Pd | Ag | Al | Mo | Nb | Zr | Bi | Pb | Se | W | Zn | Cu | Ni | Co | Fe | Mn | Cr | V | Ti |
| | 1 | 1.4404 / SS316L | 0.15 | 0.10 | 0.01 | 0.14 | 0.00 | 2.30 | 0.02 | 0.00 | 0.00 | 0.01 | 0.00 | 0.01 | 0.05 | 0.45 | 11.05 | 0.20 | 68.39 | 0.66 | 16.34 | 0.08 | 0.01 |

| Certificats FDA / FDA Zertificate / FDA certificates - Drawing 465076-CMA | | | | | |
|---|---|---|---|---|---|
| 500 | Elastollan | Art. | 408448 | Document N° / Dokument Nr. / Document No : | 21026-1 |

| Pos.101 | | | Dessin / Zeichnung / Drawing: 465220-CMA | | | | | | | | | | | | | | | | | | | | |
|---|---|---|---|---|---|---|---|---|---|---|---|---|---|---|---|---|---|---|---|---|---|---|---|
| Mesure N° Mass Nr. Measure Nr. | | | Matière Material Material | % | | | | | | | | | | | | | | | | | | | |
| | | | | Sb | Sn | Pd | Ag | Al | Mo | Nb | Zr | Bi | Pb | Se | W | Zn | Cu | Ni | Co | Fe | Mn | Cr | V | Ti |
| | | 1 | 1.4404 / SS316L | 0 | 0.07 | 0.01 | 0.12 | 0 | 2.28 | 0.02 | 0 | 0 | 0 | 0 | 0.09 | 0.02 | 0.19 | 10.64 | 0.03 | 69.13 | 1.07 | 16.3 | 0.03 | 0 |
| | | 2 | 1.4404 / SS316L | 0 | 0.02 | 0 | 0.12 | 0 | 2.26 | 0.02 | 0 | 0 | 0 | 0 | 0.03 | 0.08 | 0.45 | 10.45 | 0.01 | 67.96 | 1.25 | 17.3 | 0.04 | 0.01 |
| | | 3 | 1.4438/SS317L | 0 | 0.05 | 0 | 0.11 | 0 | 2.85 | 0.02 | 0 | 0 | 0 | 0 | 0.03 | 0.05 | 0.36 | 12.83 | 0.10 | 63.81 | 2.01 | 17.67 | 0.02 | 0.09 |

**Protocole établi par (visa)** **le**
**Protokoll erstellt von (Visa)** U.Schaller **am** 27.08.11
**Report established by (Visa)** **on**

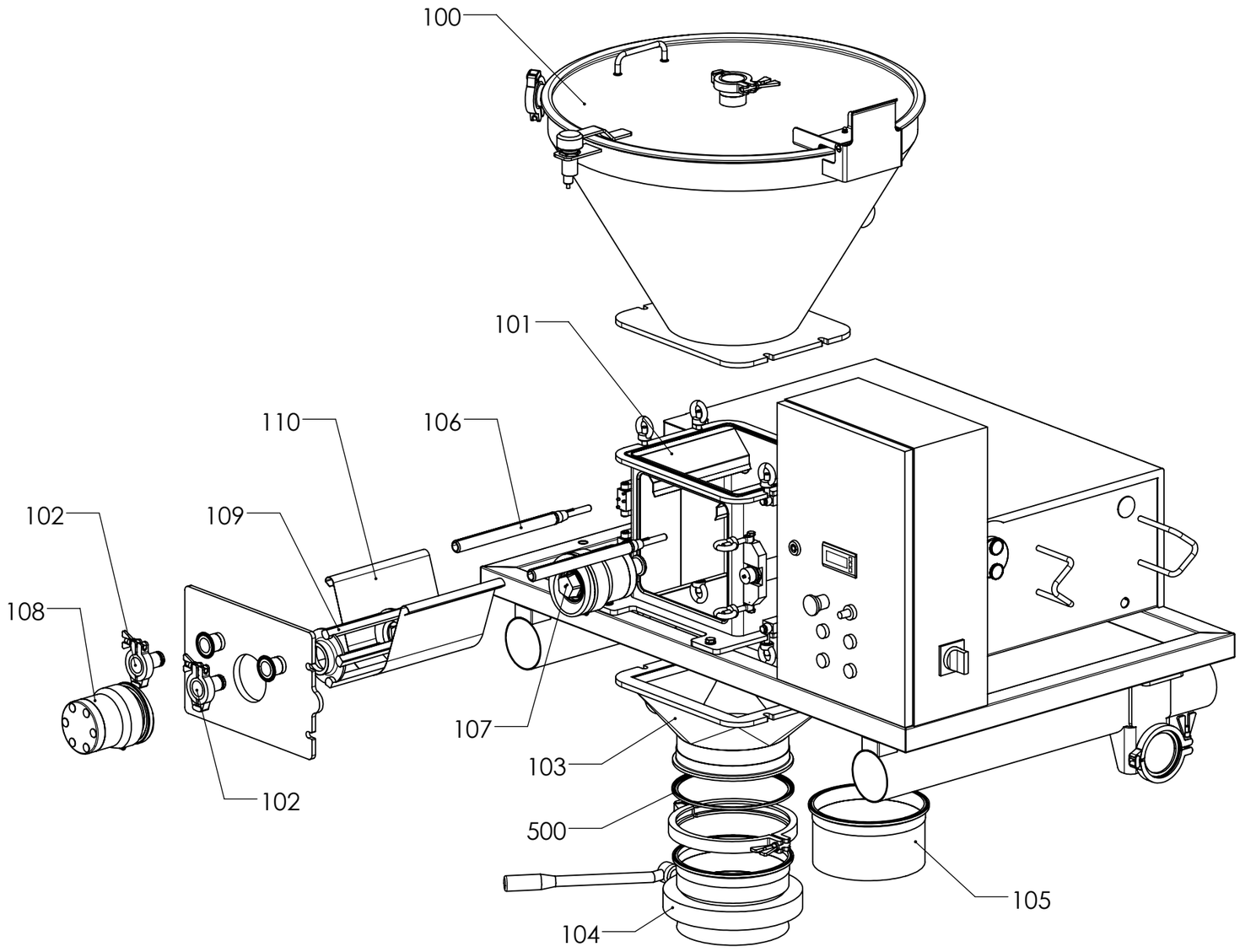


| Position | N° article<br>Artikel Nr<br>Item number | Certificat Matière<br>Materialzertifikate<br>Materials certificates<br>EN-10204-3.1B / FDA | Certificats d'états de surface<br>Zertifikate für Oberflächenqualität<br>Surface quality certificates |
|---|---|---|---|
| 100 | 465211-CMA | X | X |
| 101 | 465117-CMA | X | X |
| 102 | 465214-CMA | X | X |
| 103 | 465173-CMA | X | X |
| 104 | 465174-CMA | X | X |
| 105 | 465165-CMA | X | X |
| 106 | 417089-CMA | X | X |
| 107 | 465126-CMA | X | X |
| 108 | 465076-CMA | X | X |
| 109 | 401402-CMA | X | X |
| 110 | 20220 | X | 0 |
| 500 | 423856 | X | 0 |

X = livré / geliefert / delivered
0 = non livré / ungeliefert / undelivered

| Dimensions without tolerance [mm] | above | | 6 | 30 | 120 | 400 | 1000 |
|---|---|---|---|---|---|---|---|
| | up to | 6 | 30 | 120 | 400 | 1000 | 2000 |
| Machining: ISO 2768-m | | ±0.10 | ±0.20 | ±0.30 | ±0.50 | ±0.80 | ±1.20 |
| Welding Assembly: ISO 2768-c | | ±0.30 | ±0.50 | ±0.80 | ±1.20 | ±2.00 | ±3.00 |

PRO-11-0078 / MF-3

MATERIAL : N/A

| Scale | Similar | Designed | 10/06/2011 | thle |
|---|---|---|---|---|
| % | | Controlled | 22/07/2011 | thle |
| | Weight [kg] | Revised | 22/07/2011 | thle |
| A3 | N/A | Atex | | |

Any and all information received by you from us shall be held and kept confidential and shall not be disclosed by you to any third party except with prior written consent of FREWITT SA.

Frewitt SA: Milling and Handling of Powders
P.O.B. 615, CH-1701 Fribourg, SWITZERLAND
tel: +41 26 460 74 00 / fax: +41 26 460 74 01
info@frewitt.com / www.frewitt.com

# 465107-CMA

| Page | Ver. |
|---|---|
| 1/1 | A |

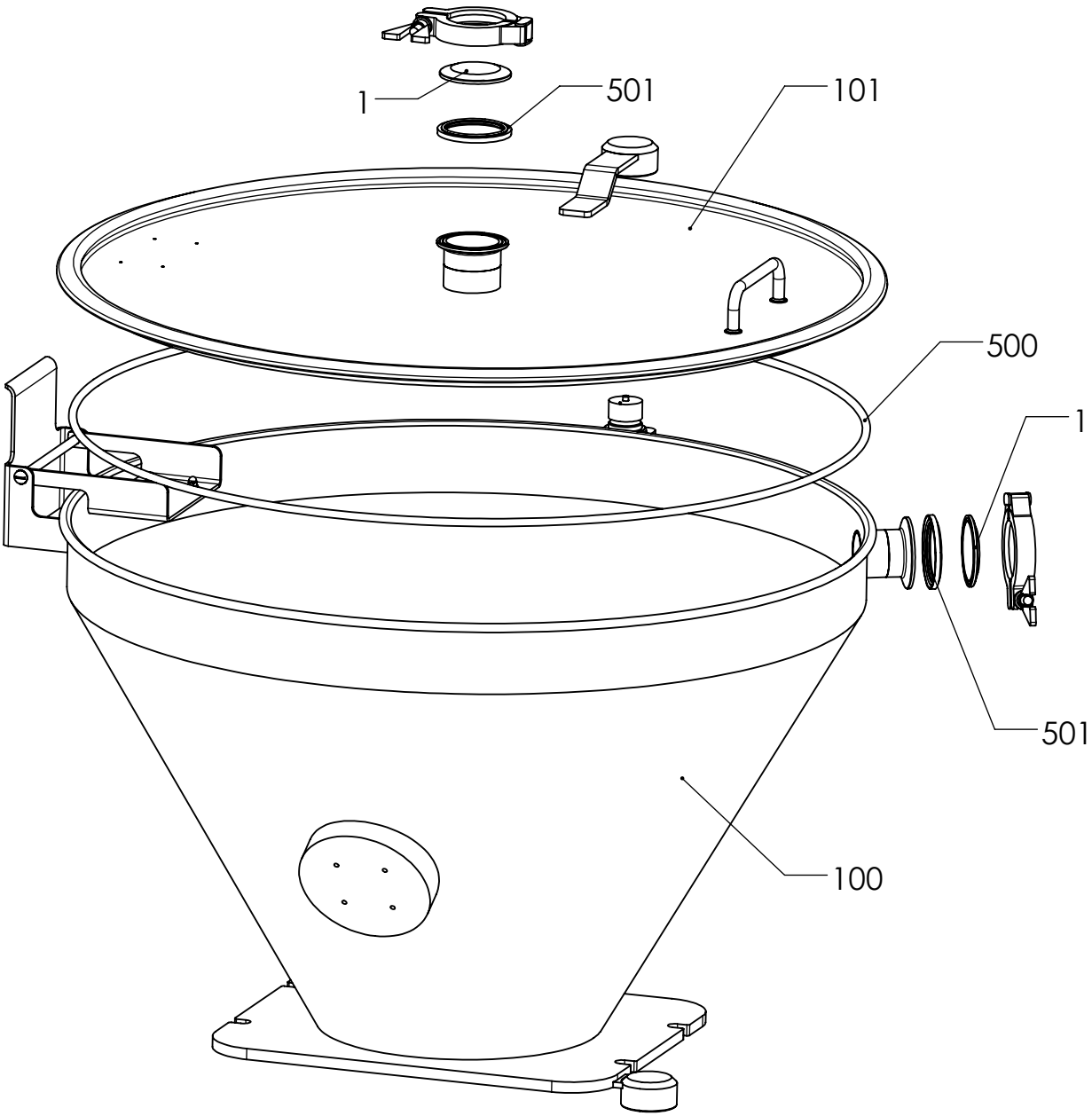


| Position | Item number |
|---|---|
| 1 | --- |
| 100 | 465204-CMA |
| 101 | 465208-CMA |
| 500 | 410990 |
| 501 | 409290 |

| Dimensions without tolerance [mm] | above | | 6 | 30 | 120 | 400 | 1000 |
|---|---|---|---|---|---|---|---|
| | up to | 6 | 30 | 120 | 400 | 1000 | 2000 |
| Machining: ISO 2768-m | | ±0.10 | ±0.20 | ±0.30 | ±0.50 | ±0.80 | ±1.20 |
| Welding Assembly: ISO 2768-c | | ±0.30 | ±0.50 | ±0.80 | ±1.20 | ±2.00 | ±3.00 |

MATERIAL :

| Scale | Similar | Designed | 09/06/2011 | thle |
|---|---|---|---|---|
| % | | Controlled | 06/07/2011 | thle |
| | Weight [kg] | Revised | 06/07/2011 | thle |
| A4 | 34.068 | Atex | | |

Entonnoir entrée

Any and all information received by you from us shall be held and kept confidential and shall not be disclosed by you to any third party except with prior written consent of FREWITT SA.

Frewitt SA: Milling and Handling of Powders
P.O.B. 615, CH-1701 Fribourg, SWITZERLAND
tel: +41 26 460 74 00 / fax: +41 26 460 74 01
info@frewitt.com / www.frewitt.com

465211-CMA

| Page | Ver. |
|---|---|
| 1/1 | A |

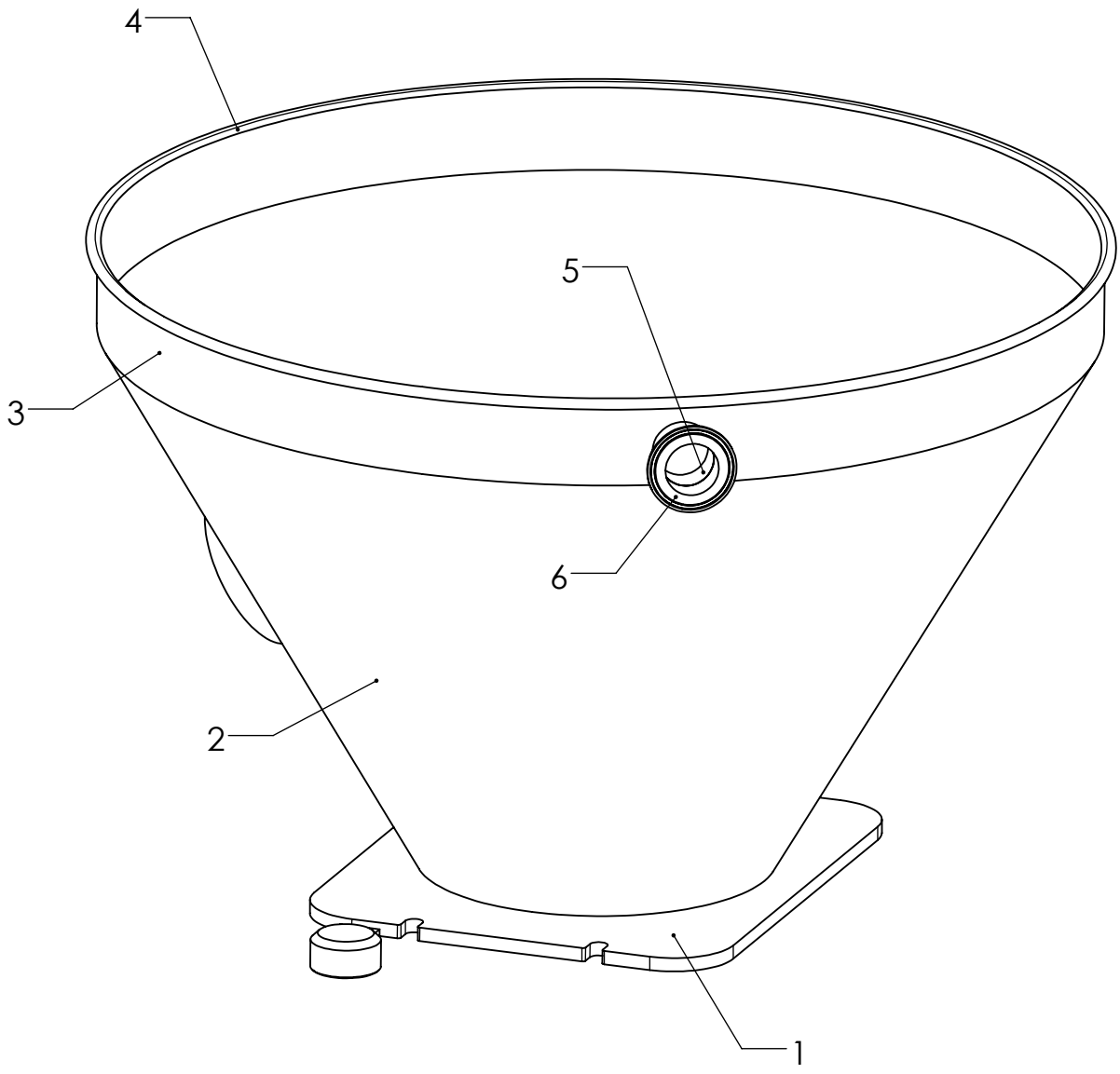


| Dimensions without tolerance [mm] | above | | 6 | 30 | 120 | 400 | 1000 |
|---|---|---|---|---|---|---|---|
| | up to | 6 | 30 | 120 | 400 | 1000 | 2000 |
| Machining: ISO 2768-m | | ±0.10 | ±0.20 | ±0.30 | ±0.50 | ±0.80 | ±1.20 |
| Welding Assembly: ISO 2768-c | | ±0.30 | ±0.50 | ±0.80 | ±1.20 | ±2.00 | ±3.00 |

MATERIAL : 316L

Entonnoir soudé

| Scale | Similar | Designed | 08/06/2011 | thle |
|---|---|---|---|---|
| % | | Controlled | 06/07/2011 | thle |
| | Weight [kg] | Revised | 06/07/2011 | thle |
| A4 | N/A | Atex | | |

Any and all information received by you from us shall be held and kept confidential and shall not be disclosed by you to any third party except with prior written consent of FREWITT SA.

Frewitt SA: Milling and Handling of Powders
P.O.B. 615, CH-1701 Fribourg, SWITZERLAND
tel: +41 26 460 74 00 / fax: +41 26 460 74 01
info@frewitt.com / www.frewitt.com

465204-CMA

| Page | Ver. |
|---|---|
| 1/1 | A |

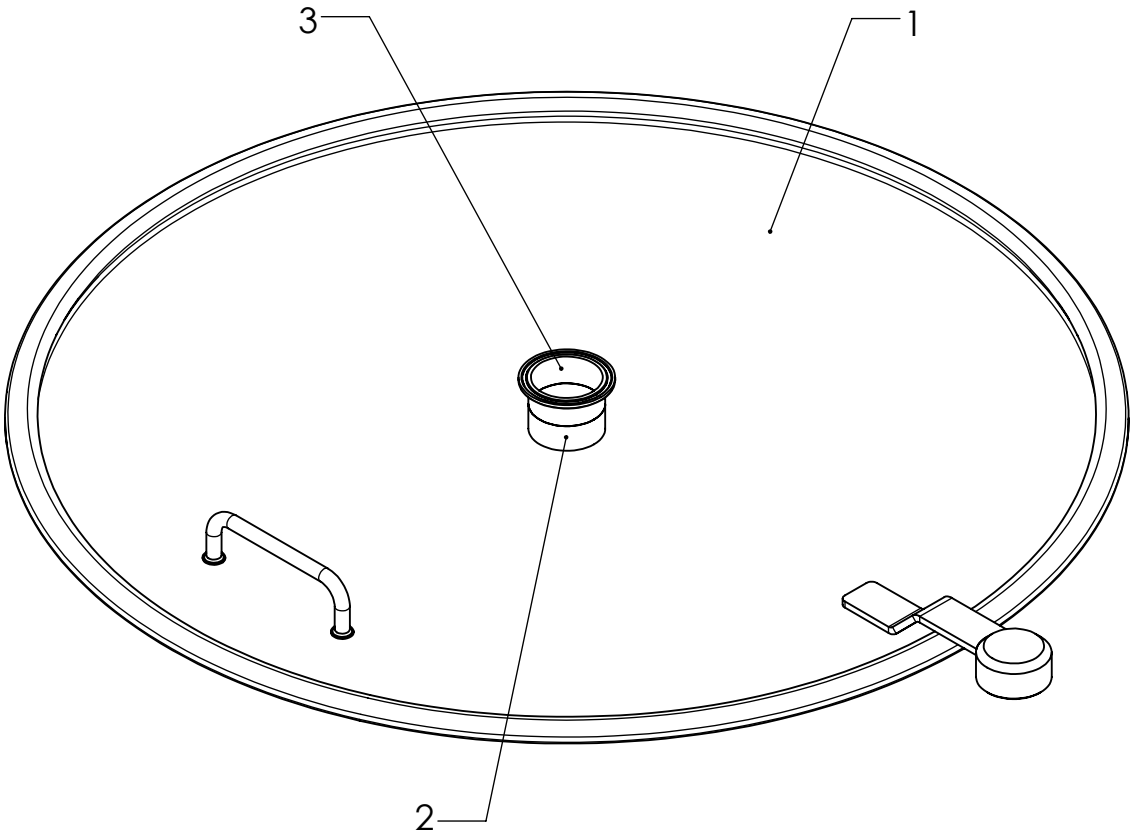


| Dimensions without tolerance [mm] | above | | 6 | 30 | 120 | 400 | 1000 |
|---|---|---|---|---|---|---|---|
| | up to | 6 | 30 | 120 | 400 | 1000 | 2000 |
| Machining: ISO 2768-m | | ±0.10 | ±0.20 | ±0.30 | ±0.50 | ±0.80 | ±1.20 |
| Welding Assembly: ISO 2768-c | | ±0.30 | ±0.50 | ±0.80 | ±1.20 | ±2.00 | ±3.00 |

MATERIAL : 316/316L

Couvercle modifié

| Scale | Similar | Designed | 09/06/2011 | thle |
|---|---|---|---|---|
| % | | Controlled | 09/06/2011 | thle |
| | Weight [kg] | Revised | 09/06/2011 | thle |
| A4 | N/A | Atex | | |

Any and all information received by you from us shall be held and kept confidential and shall not be disclosed by you to any third party except with prior written consent of FREWITT SA.

FREWITT
Frewitt SA: Milling and Handling of Powders
P.O.B. 615, CH-1701 Fribourg, SWITZERLAND
tel: +41 26 460 74 00 / fax: +41 26 460 74 01
info@frewitt.com / www.frewitt.com

465208-CMA

| Page | Ver. |
|---|---|
| 1/1 | A |

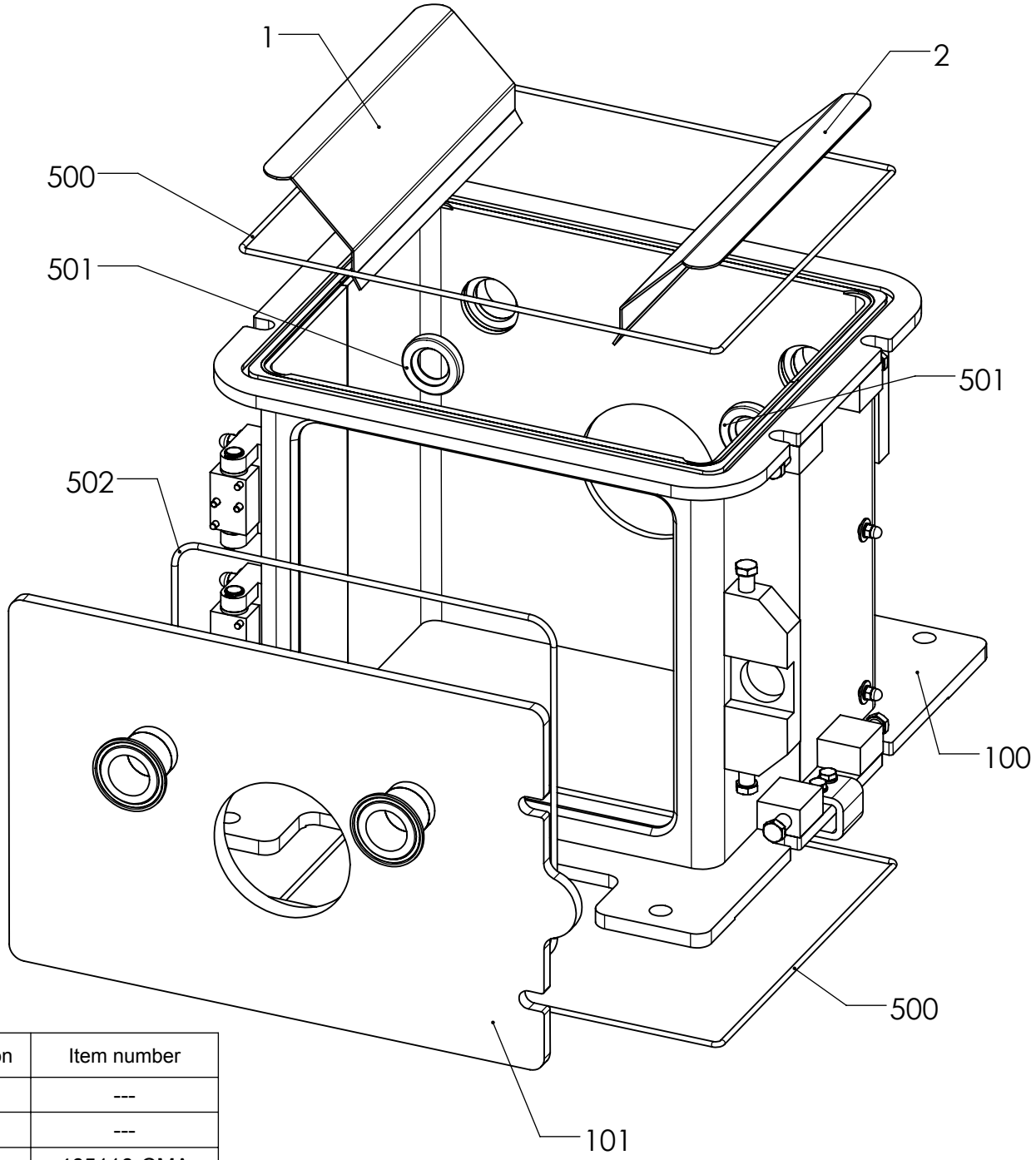


| Position | Item number |
|---|---|
| 1 | --- |
| 2 | --- |
| 100 | 465116-CMA |
| 101 | 465121-CMA |
| 500 | 433239 |
| 501 | 405367 |
| 502 | 450611 |

| Dimensions without tolerance [mm] | above | | 6 | 30 | 120 | 400 | 1000 |
|---|---|---|---|---|---|---|---|
| | up to | 6 | 30 | 120 | 400 | 1000 | 2000 |
| Machining: ISO 2768-m | | ±0.10 | ±0.20 | ±0.30 | ±0.50 | ±0.80 | ±1.20 |
| Welding Assembly: ISO 2768-c | | ±0.30 | ±0.50 | ±0.80 | ±1.20 | ±2.00 | ±3.00 |

MATERIAL : N/A

| Scale | Similar | Designed | 08/06/2011 | thle |
|---|---|---|---|---|
| % | | Controlled | 30/08/2011 | thle |
| | Weight [kg] | Revised | 30/08/2011 | thle |
| A4 | 35.503 | Atex | | |

Bâti complet

Any and all information received by you from us shall be held and kept confidential and shall not be disclosed by you to any third party except with prior written consent of FREWITT SA.

Frewitt SA: Milling and Handling of Powders
P.O.B. 615, CH-1701 Fribourg, SWITZERLAND
tel: +41 26 460 74 00 / fax: +41 26 460 74 01
info@frewitt.com / www.frewitt.com

465117-CMA

| Page | Ver. |
|---|---|
| 1/1 | A |

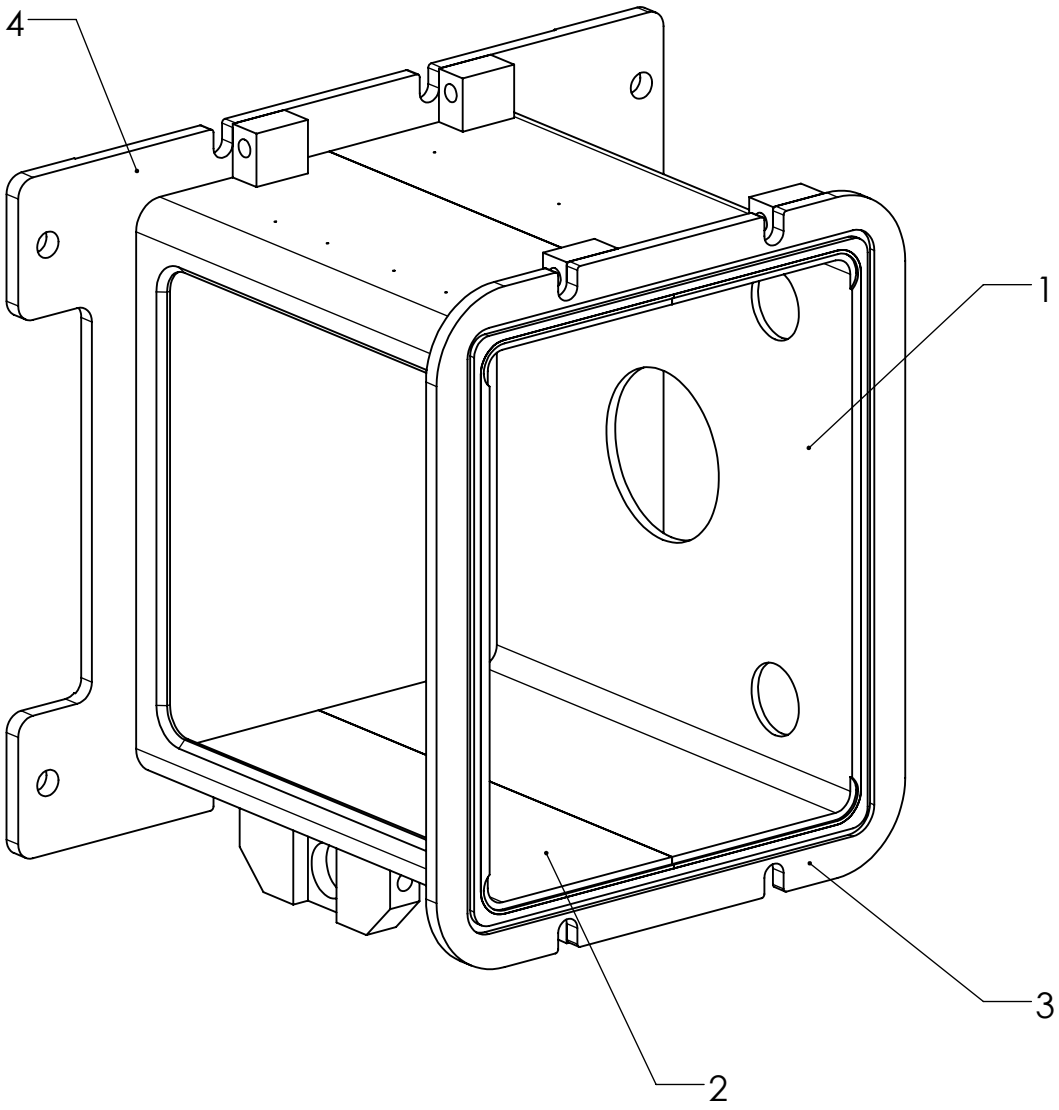


| Dimensions without tolerance [mm] | above | | 6 | 30 | 120 | 400 | 1000 |
|---|---|---|---|---|---|---|---|
| | up to | 6 | 30 | 120 | 400 | 1000 | 2000 |
| Machining: ISO 2768-m | | ±0.10 | ±0.20 | ±0.30 | ±0.50 | ±0.80 | ±1.20 |
| Welding Assembly: ISO 2768-c | | ±0.30 | ±0.50 | ±0.80 | ±1.20 | ±2.00 | ±3.00 |

MATERIAL : 316L

Bâti MF-3 ARNSF

| Scale | Similar | Designed | 08/06/2011 | thle |
|---|---|---|---|---|
| % | | Controlled | 08/06/2011 | thle |
| | Weight [kg] | Revised | 08/06/2011 | thle |
| A4 | N/A | Atex | | |

Any and all information received by you from us shall be held and kept confidential and shall not be disclosed by you to any third party except with prior written consent of FREWITT SA.

Frewitt SA: Milling and Handling of Powders
P.O.B. 615, CH-1701 Fribourg, SWITZERLAND
tel: +41 26 460 74 00 / fax: +41 26 460 74 01
info@frewitt.com / www.frewitt.com

465116-CMA

| Page | Ver. |
|---|---|
| 1/1 | A |

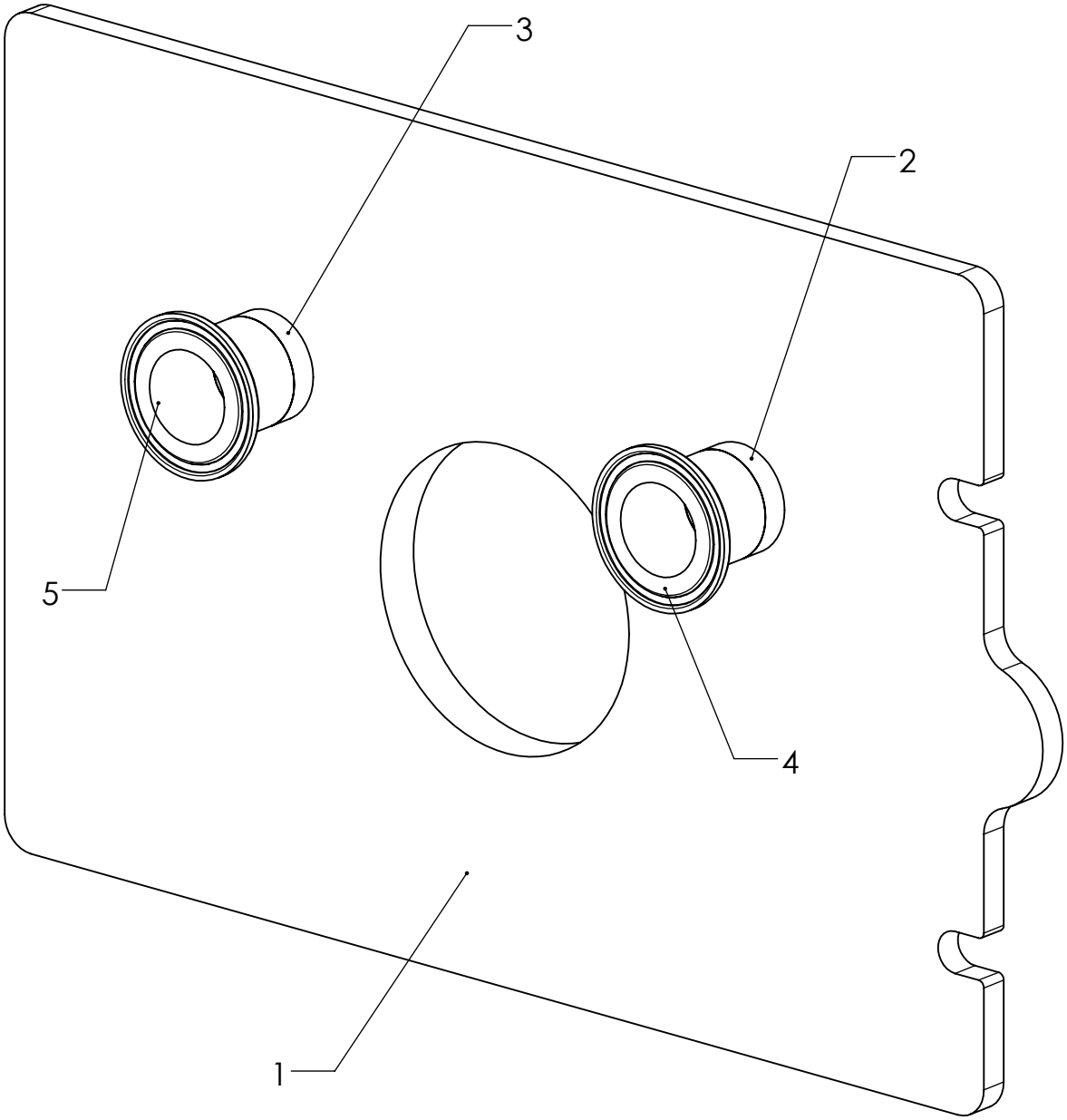


| Dimensions without tolerance [mm] | above | | 6 | 30 | 120 | 400 | 1000 |
|---|---|---|---|---|---|---|---|
| | up to | 6 | 30 | 120 | 400 | 1000 | 2000 |
| Machining: ISO 2768-m | | ±0.10 | ±0.20 | ±0.30 | ±0.50 | ±0.80 | ±1.20 |
| Welding Assembly: ISO 2768-c | | ±0.30 | ±0.50 | ±0.80 | ±1.20 | ±2.00 | ±3.00 |

MATERIAL : 316L

Porte avec regard

| Scale | Similar | Designed | 08/06/2011 | thle |
|---|---|---|---|---|
| % | | Controlled | 08/06/2011 | thle |
| | Weight [kg] | Revised | 08/06/2011 | thle |
| A4 | N/A | Atex | | |

Any and all information received by you from us shall be held and kept confidential and shall not be disclosed by you to any third party except with prior written consent of FREWITT SA.

Frewitt SA: Milling and Handling of Powders
P.O.B. 615, CH-1701 Fribourg, SWITZERLAND
tel: +41 26 460 74 00 / fax: +41 26 460 74 01
info@frewitt.com / www.frewitt.com

465121-CMA

| Page | Ver. |
|---|---|
| 1/1 | A |

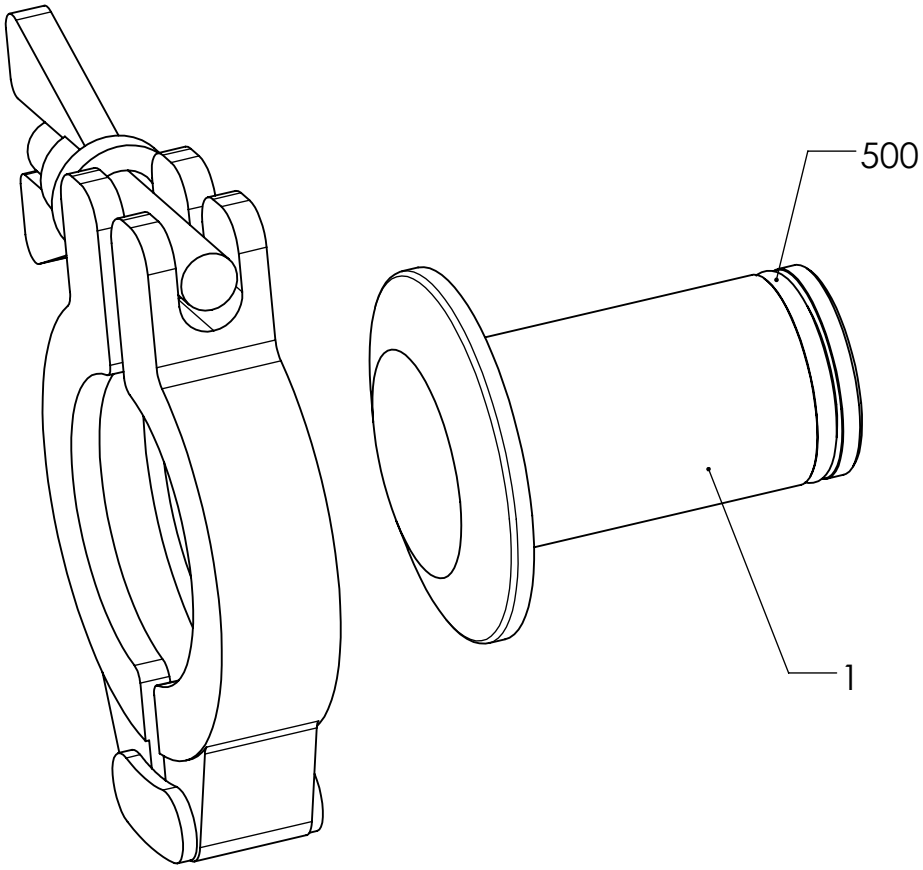


| Position | Item number |
|---|---|
| 1 | --- |
| 500 | 427424 |

| Dimensions without tolerance [mm] | above | | 6 | 30 | 120 | 400 | 1000 |
|---|---|---|---|---|---|---|---|
| | up to | 6 | 30 | 120 | 400 | 1000 | 2000 |
| Machining: ISO 2768-m | | ±0.10 | ±0.20 | ±0.30 | ±0.50 | ±0.80 | ±1.20 |
| Welding Assembly: ISO 2768-c | | ±0.30 | ±0.50 | ±0.80 | ±1.20 | ±2.00 | ±3.00 |

MATERIAL : N/A

Ensemble bouchon de fermeture

| Scale | Similar | | | |
|---|---|---|---|---|
| % | | Designed | 08/06/2011 | thle |
| | | Controlled | 31/08/2011 | thle |
| | Weight [kg] | Revised | 31/08/2011 | thle |
| A4 | N/A | Atex | | |

Any and all information received by you from us shall be held and kept confidential and shall not be disclosed by you to any third party except with prior written consent of FREWITT SA.

Frewitt SA: Milling and Handling of Powders
P.O.B. 615, CH-1701 Fribourg, SWITZERLAND
tel: +41 26 460 74 00 / fax: +41 26 460 74 01
info@frewitt.com / www.frewitt.com

465214-CMA

| Page | Ver. |
|---|---|
| 1/1 | A |

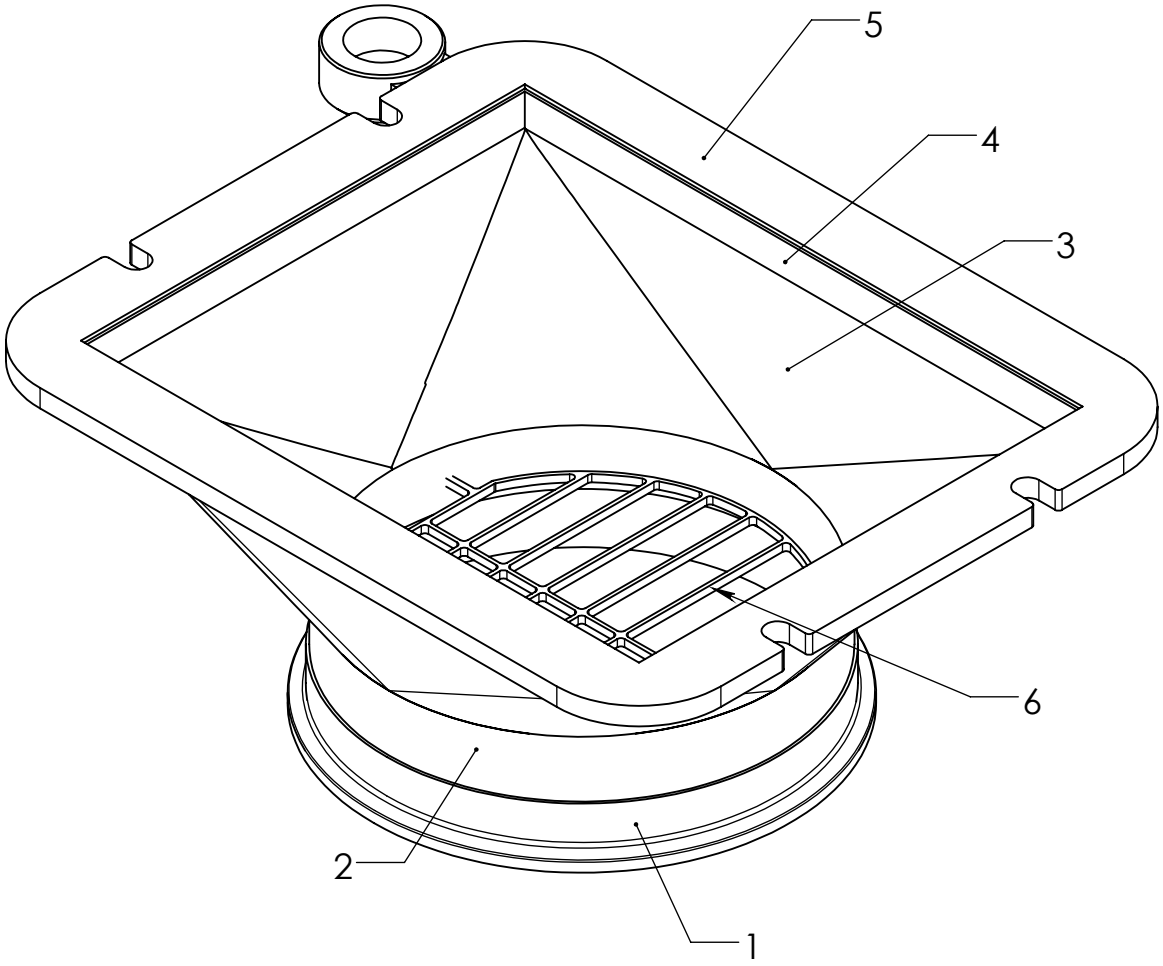


| Dimensions without tolerance [mm] | above | | 6 | 30 | 120 | 400 | 1000 |
|---|---|---|---|---|---|---|---|
| | up to | 6 | 30 | 120 | 400 | 1000 | 2000 |
| Machining: ISO 2768-m | | ±0.10 | ±0.20 | ±0.30 | ±0.50 | ±0.80 | ±1.20 |
| Welding Assembly: ISO 2768-c | | ±0.30 | ±0.50 | ±0.80 | ±1.20 | ±2.00 | ±3.00 |

MATERIAL : 316/316L

Entonnoir sortie

| Scale | Similar | | | |
|---|---|---|---|---|
| % | 461234 | Designed | 06/06/2011 | thle |
| | | Controlled | 21/07/2011 | thle |
| | Weight [kg] | Revised | 21/07/2011 | thle |
| A4 | 6.157 | Atex | | |

Any and all information received by you from us shall be held and kept confidential and shall not be disclosed by you to any third party except with prior written consent of FREWITT SA.

Frewitt SA: Milling and Handling of Powders
P.O.B. 615, CH-1701 Fribourg, SWITZERLAND
tel: +41 26 460 74 00 / fax: +41 26 460 74 01
info@frewitt.com / www.frewitt.com

465173-CMA

| Page | Ver. |
|---|---|
| 1/1 | A |

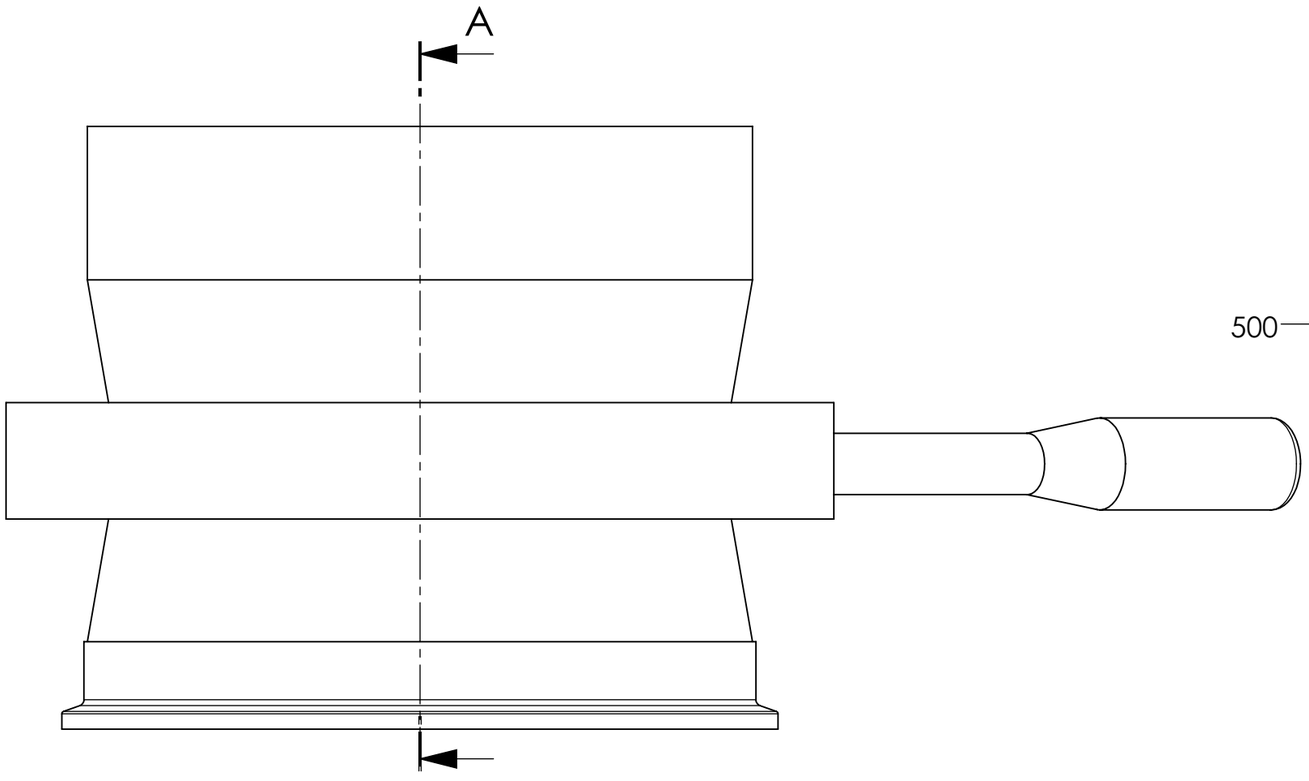


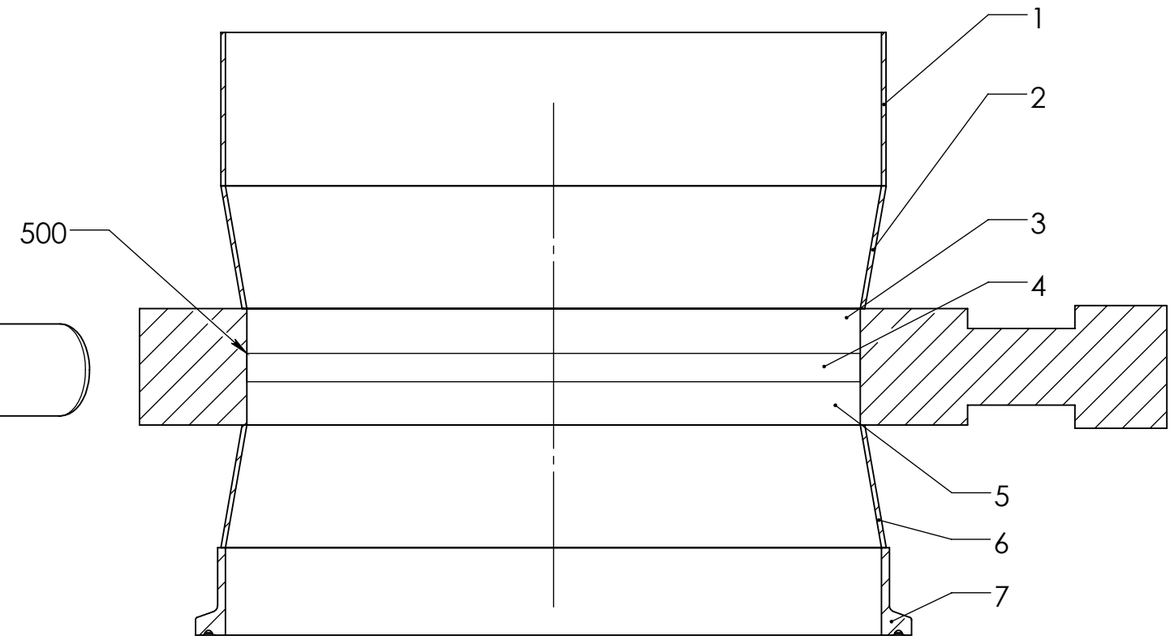


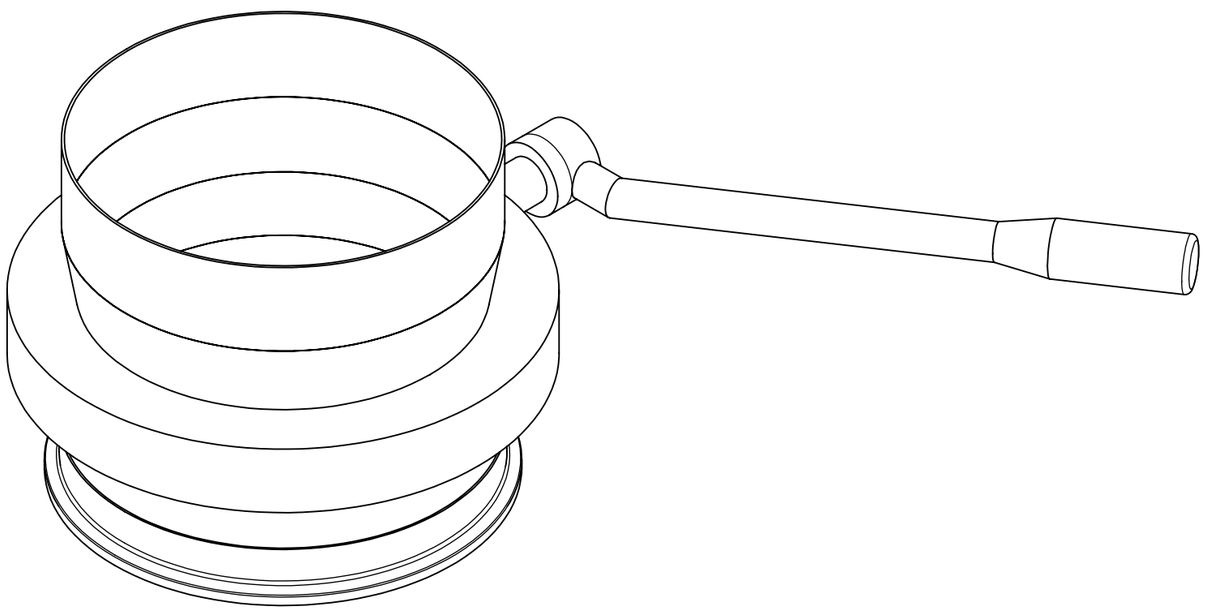

| Dimensions without tolerance [mm] | above | | 6 | 30 | 120 | 400 | 1000 |
|---|---|---|---|---|---|---|---|
| | up to | 6 | 30 | 120 | 400 | 1000 | 2000 |
| Machining: ISO 2768-m | | ±0.10 | ±0.20 | ±0.30 | ±0.50 | ±0.80 | ±1.20 |
| Welding Assembly: ISO 2768-c | | ±0.30 | ±0.50 | ±0.80 | ±1.20 | ±2.00 | ±3.00 |

Vanne papillon DN200

MATERIAL : 316L

| Scale | Similar | | | |
|---|---|---|---|---|
| % | 456641 | Designed | 06/06/2011 | thle |
| | | Controlled | 18/07/2011 | thle |
| | Weight [kg] | Revised | 18/07/2011 | thle |
| A3 | 11.043 | Atex | | |

Any and all information received by you from us shall be held and kept confidential and shall not be disclosed by you to any third party except with prior written consent of FREWITT SA.

Frewitt SA; Milling and Handling of Powders
P.O.B. 615, CH-1701 Fribourg, SWITZERLAND
tel: +41 26 460 74 00 / fax: +41 26 460 74 01
info@frewitt.com / www.frewitt.com

465174-CMA

| Page | Ver. |
|---|---|
| 1/1 | A |

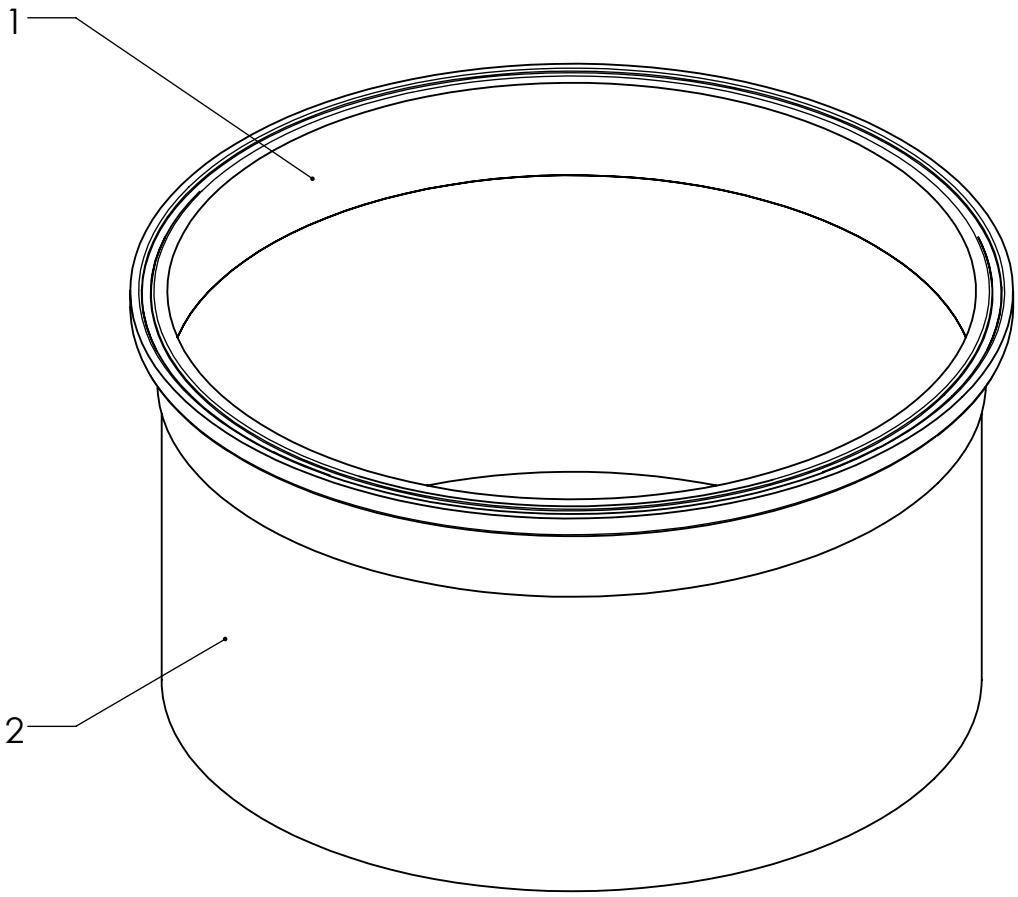


| Dimensions without tolerance [mm] | above | | 6 | 30 | 120 | 400 | 1000 |
|---|---|---|---|---|---|---|---|
| | up to | 6 | 30 | 120 | 400 | 1000 | 2000 |
| Machining: ISO 2768-m | | ±0.10 | ±0.20 | ±0.30 | ±0.50 | ±0.80 | ±1.20 |
| Welding Assembly: ISO 2768-c | | ±0.30 | ±0.50 | ±0.80 | ±1.20 | ±2.00 | ±3.00 |

MATERIAL : 316/316L

Entonnoir de sortie

| Scale | Similar | | | |
|---|---|---|---|---|
| % | 458600 | Designed | 08/06/2011 | thle |
| | | Controlled | 08/06/2011 | thle |
| | Weight [kg] | Revised | 08/06/2011 | thle |
| A4 | 1.41 | Atex | | |

Any and all information received by you from us shall be held and kept confidential and shall not be disclosed by you to any third party except with prior written consent of FREWITT SA.

Frewitt SA: Milling and Handling of Powders
P.O.B. 615, CH-1701 Fribourg, SWITZERLAND
tel: +41 26 460 74 00 / fax: +41 26 460 74 01
info@frewitt.com / www.frewitt.com

465165-CMA

| Page | Ver. |
|---|---|
| 1/1 | A |

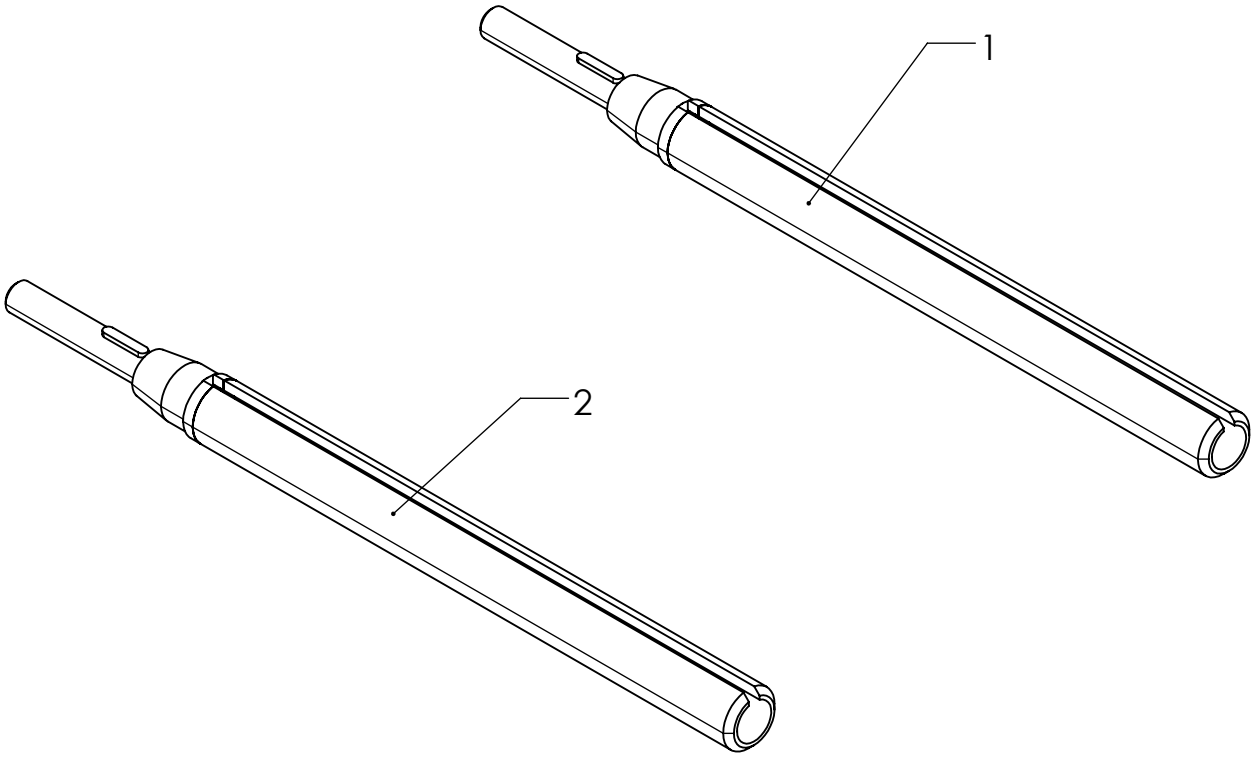


| Dimensions without tolerance [mm] | above | | 6 | 30 | 120 | 400 | 1000 |
|---|---|---|---|---|---|---|---|
| | up to | 6 | 30 | 120 | 400 | 1000 | 2000 |
| Machining: ISO 2768-m | | ±0.10 | ±0.20 | ±0.30 | ±0.50 | ±0.80 | ±1.20 |
| Welding Assembly: ISO 2768-c | | ±0.30 | ±0.50 | ±0.80 | ±1.20 | ±2.00 | ±3.00 |

MATERIAL : Matériau <non spécifié>

| Scale | Similar | Designed | 14/09/2010 | wwi |
|---|---|---|---|---|
| % | | Controlled | 07/09/2011 | jbe |
| | Weight [kg] | Revised | 07/09/2011 | jbe |
| A4 | 0.00 | Atex | | |

03 TENDEUR TREILLIS

Any and all information received by you from us shall be held and kept confidential and shall not be disclosed by you to any third party except with prior written consent of FREWITT SA.

Frewitt SA: Milling and Handling of Powders
P.O.B. 615, CH-1701 Fribourg, SWITZERLAND
tel: +41 26 460 74 00 / fax: +41 26 460 74 01
info@frewitt.com / www.frewitt.com

417089-CMA

| Page | Ver. |
|---|---|
| 1/1 | B |

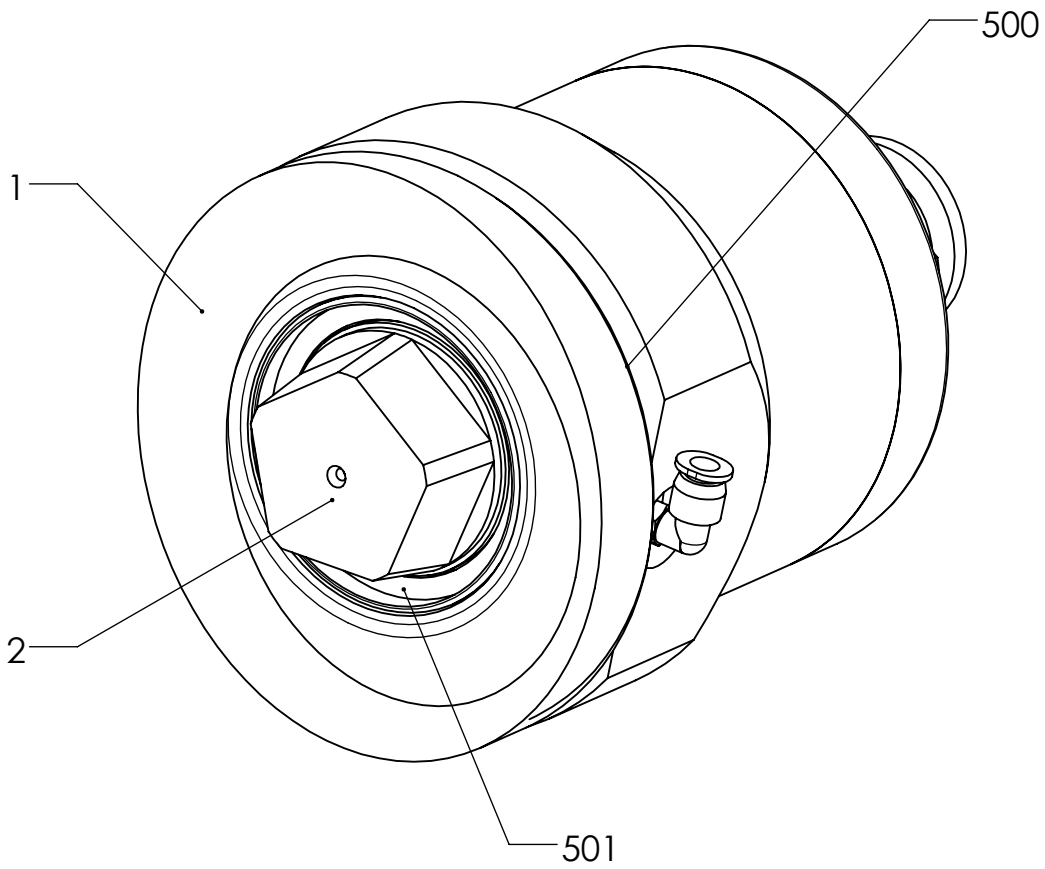


| Position | Item number |
|---|---|
| 1 | --- |
| 2 | --- |
| 500 | 414955 |
| 501 | 402141 |

| Dimensions without tolerance [mm] | above | | 6 | 30 | 120 | 400 | 1000 |
|---|---|---|---|---|---|---|---|
| | up to | 6 | 30 | 120 | 400 | 1000 | 2000 |
| Machining: ISO 2768-m | | ±0.10 | ±0.20 | ±0.30 | ±0.50 | ±0.80 | ±1.20 |
| Welding Assembly: ISO 2768-c | | ±0.30 | ±0.50 | ±0.80 | ±1.20 | ±2.00 | ±3.00 |

MATERIAL :

PALIER FIXE AI

| Scale | Similar | Designed | 08/06/2011 | thle |
|---|---|---|---|---|
| % | 443222 | Controlled | 08/06/2011 | thle |
| | Weight [kg] | Revised | 08/06/2011 | thle |
| A4 | 8.59 | Atex | | |

Any and all information received by you from us shall be held and kept confidential and shall not be disclosed by you to any third party except with prior written consent of FREWITT SA.

Frewitt SA: Milling and Handling of Powders
P.O.B. 615, CH-1701 Fribourg, SWITZERLAND
tel: +41 26 460 74 00 / fax: +41 26 460 74 01
info@frewitt.com / www.frewitt.com

465126-CMA

| Page | Ver. |
|---|---|
| 1/1 | A |

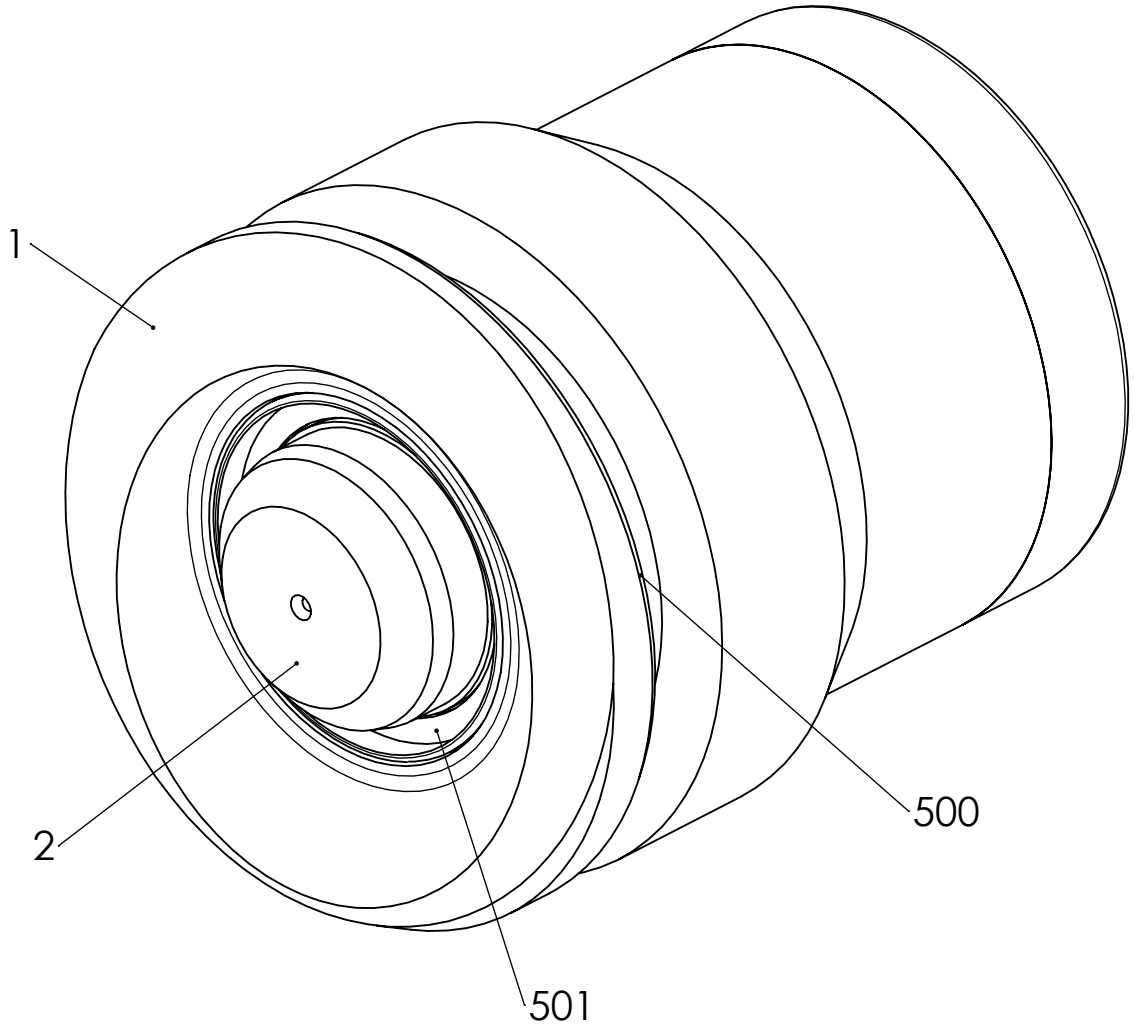


| Position | Item number |
|---|---|
| 1 | --- |
| 2 | --- |
| 500 | 414955 |
| 501 | 402141 |

| Dimensions without tolerance [mm] | above | | 6 | 30 | 120 | 400 | 1000 |
|---|---|---|---|---|---|---|---|
| | up to | 6 | 30 | 120 | 400 | 1000 | 2000 |
| Machining: ISO 2768-m | | ±0.10 | ±0.20 | ±0.30 | ±0.50 | ±0.80 | ±1.20 |
| Welding Assembly: ISO 2768-c | | ±0.30 | ±0.50 | ±0.80 | ±1.20 | ±2.00 | ±3.00 |

MATERIAL :

Palier mobile ai

| Scale | Similar | Designed | 27/05/2011 | cde |
|---|---|---|---|---|
| % | | Controlled | 08/06/2011 | thle |
| | Weight [kg] | Revised | 08/06/2011 | thle |
| A4 | 8.60 | Atex | | |

Any and all information received by you from us shall be held and kept confidential and shall not be disclosed by you to any third party except with prior written consent of FREWITT SA.

Frewitt SA: Milling and Handling of Powders
P.O.B. 615, CH-1701 Fribourg, SWITZERLAND
tel: +41 26 460 74 00 / fax: +41 26 460 74 01
info@frewitt.com / www.frewitt.com

465076-CMA

| Page | Ver. |
|---|---|
| 1/1 | A |

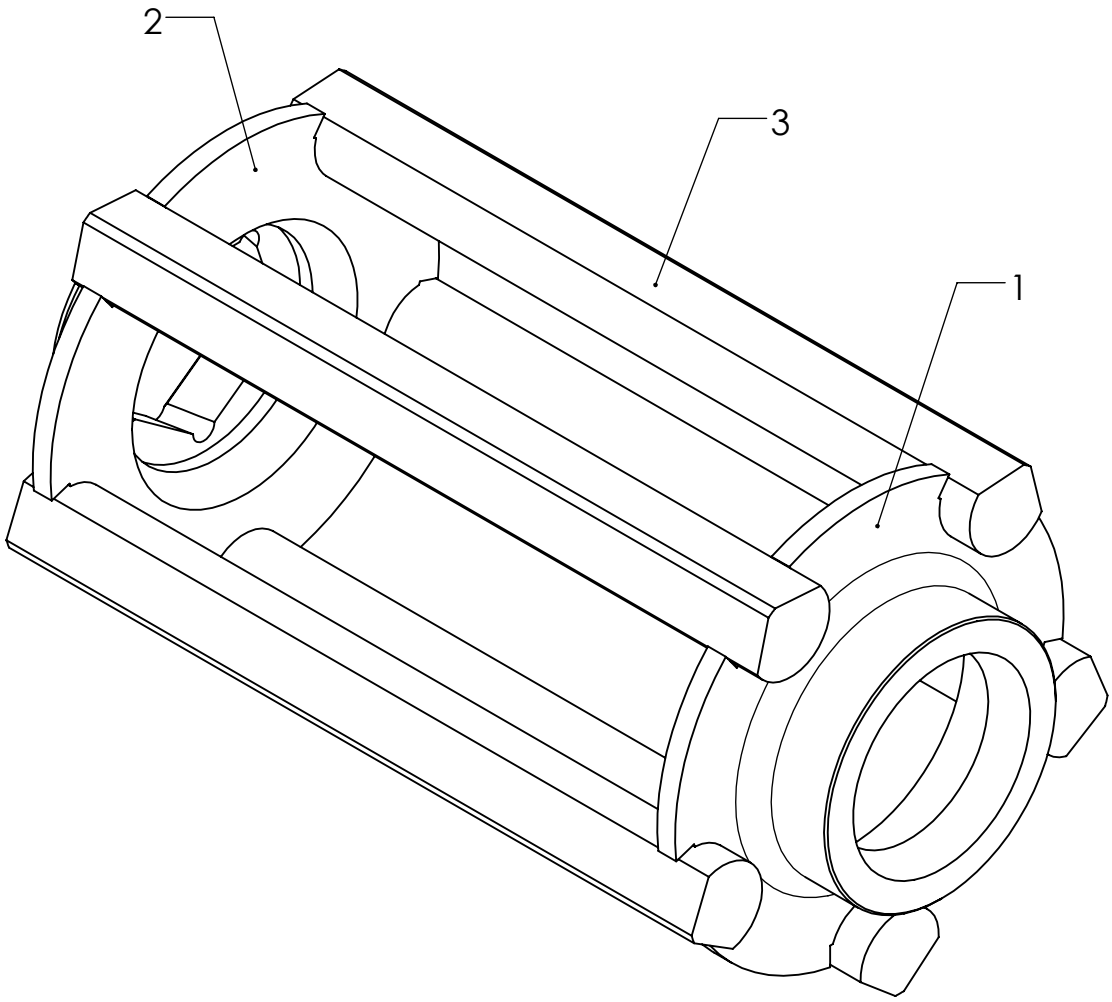


| Dimensions without tolerance [mm] | above | | 6 | 30 | 120 | 400 | 1000 |
|---|---|---|---|---|---|---|---|
| | up to | 6 | 30 | 120 | 400 | 1000 | 2000 |
| Machining: ISO 2768-m | | ±0.10 | ±0.20 | ±0.30 | ±0.50 | ±0.80 | ±1.20 |
| Welding Assembly: ISO 2768-c | | ±0.30 | ±0.50 | ±0.80 | ±1.20 | ±2.00 | ±3.00 |

MATERIAL : Matériau <non spécifié>

ROTOR

| Scale | Similar | Designed | 14/09/2010 | wwi |
|---|---|---|---|---|
| % | | Controlled | 14/09/2010 | wwi |
| | Weight [kg] | Revised | 14/09/2010 | wwi |
| A4 | 3.252 | Atex | | |

Any and all information received by you from us shall be held and kept confidential and shall not be disclosed by you to any third party except with prior written consent of FREWITT SA.

Frewitt SA: Milling and Handling of Powders
P.O.B. 615, CH-1701 Fribourg, SWITZERLAND
tel: +41 26 460 74 00 / fax: +41 26 460 74 01
info@frewitt.com / www.frewitt.com

401402-CMA

| Page | Ver. |
|---|---|
| 1/1 | A |

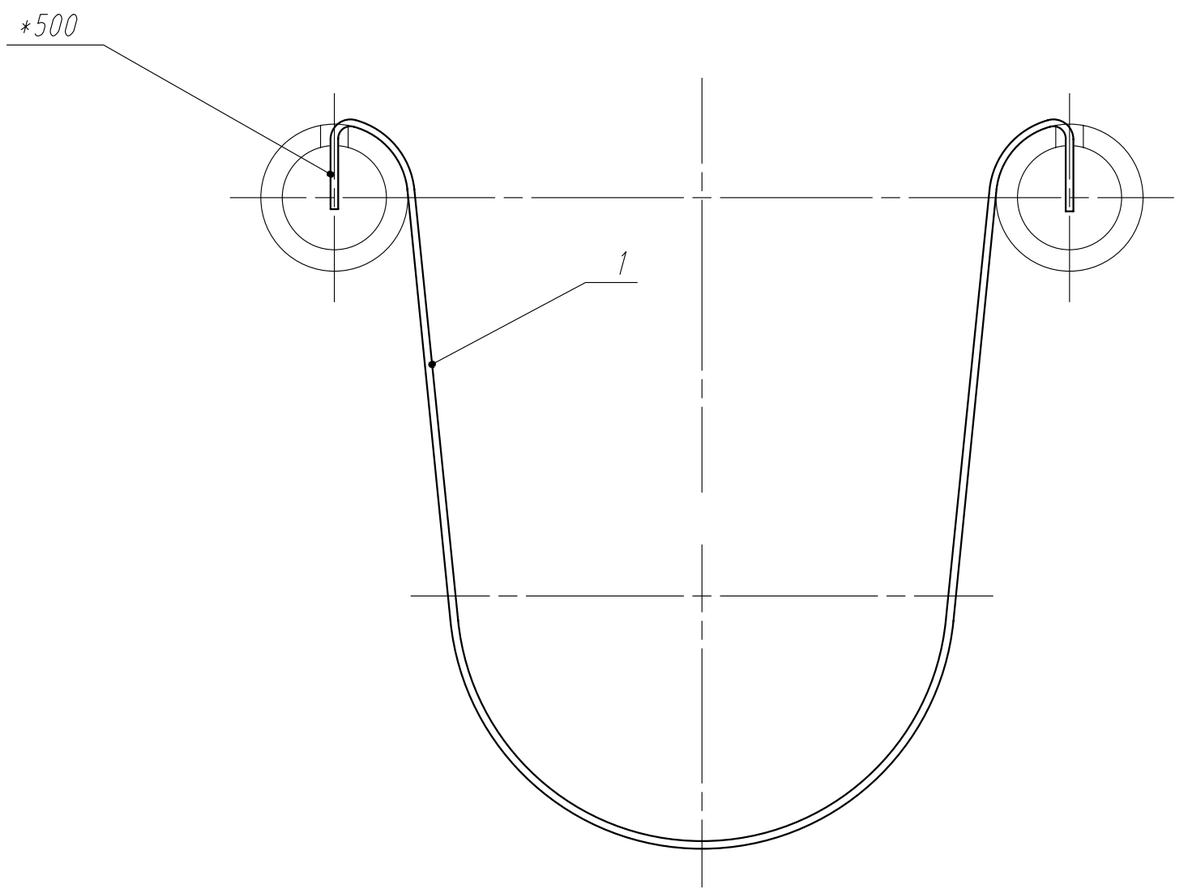


Uniquement Treillis avec bord gommés
* Nur Siebe mit Gummirand
Only sieves with rubber edges

| | | | | | | | | | | | |
|---|---|---|---|---|---|---|---|---|---|---|---|
| D | Modif.: | | | E | Modif.: | | | F | Modif.: | | |
| A | Modif.: | Date | Nom | B | Modif.: | | | C | Modif.: | | |

| | | | |
|---|---|---|---|
| Client | . | Dim. usinees | ISO 2768-m |
| Exécution | . | Dim. soudees | ISO 2768-c |

| | | | | | |
|---|---|---|---|---|---|
| Tôle perf./Treillis avec/sans bords gommés Ligne MF | Echelle % | Dessine | 01.09.05 | dma | |
| | | Controle | 01.09.05 | dma | |
| | A3 | | Page | Rev. | |

This document may neither be reproduced nor be communicated to a third party without our written permission.

FREWITT
Frewitt SA: Milling and Handling of Powders
P.O.B. 615, CH-1701 Fribourg, SWITZERLAND
tel: +41 26 460 74 00 / fax: +41 26 460 74 01
info@frewitt.com / www.frewitt.com

20220 | 1/1 | 0

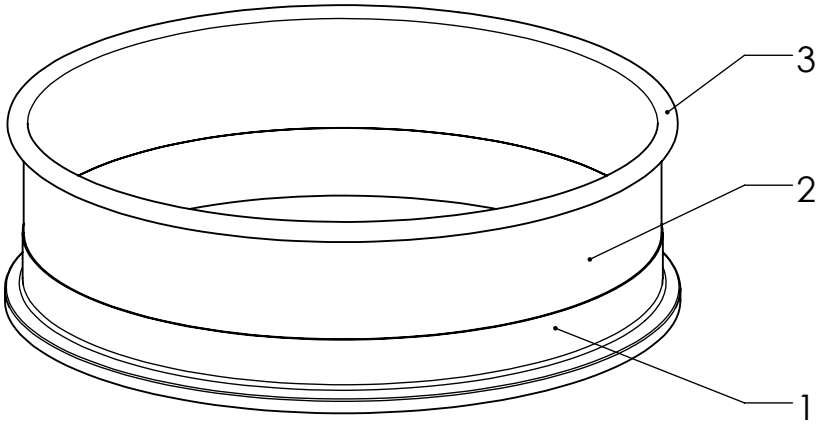


| Dimensions without tolerance [mm] | above | | 6 | 30 | 120 | 400 | 1000 |
|---|---|---|---|---|---|---|---|
| | up to | 6 | 30 | 120 | 400 | 1000 | 2000 |
| Machining: ISO 2768-m | | ±0.10 | ±0.20 | ±0.30 | ±0.50 | ±0.80 | ±1.20 |
| Welding Assembly: ISO 2768-c | | ±0.30 | ±0.50 | ±0.80 | ±1.20 | ±2.00 | ±3.00 |

MATERIAL : 316/316L

Entonnoir entrée pour container

| Scale | Similar | | | |
|---|---|---|---|---|
| % | | Designed | 10/06/2011 | thle |
| | | Controlled | 10/06/2011 | thle |
| | Weight [kg] | Revised | 10/06/2011 | thle |
| A4 | N/A | Atex | | |

Any and all information received by you from us shall be held and kept confidential and shall not be disclosed by you to any third party except with prior written consent of FREWITT SA.

Frewitt SA: Milling and Handling of Powders
P.O.B. 615, CH-1701 Fribourg, SWITZERLAND
tel: +41 26 460 74 00 / fax: +41 26 460 74 01
info@frewitt.com / www.frewitt.com

465220-CMA

| Page | Ver. |
|---|---|
| 1/1 | A |

**Voir documents suivants**

(Certificats FDA sont dans l'ordre croissant)

**Siehe folgende Dokumente**

(FDA-Zertifikate werden in aufsteigender Reihenfolge)

**See following documents**

(FDA certificates are in ascending order)



Professional Milling and Handling of Powders

DICHTUNGEN FEDERN

KUBO

**Doc No: 13876-15**

Frewitt
Fabrique de machines SA
Route du Coteau 7
1763 Granges-Paccot

8307 Effretikon, 18.01.2011 Page 1 de 1

| | |
|---|---|
| No. client | 1705 |
| V/référence | Lucas Perrin |
| Date commande | 17.01.2011 |
| Service interne | Ufuk Uzdemir |
| Service extérieur | José Cabrera |
| No. justificatif | KE 101618 |

## Déclaration conformité VK1-308404

selon SN EN ISO/IEC 17050-1
Fonction : Directeur Technique
Nom : Ivano Boldo
Signature: Iva Boldo
Commande n° CDF-11-0165 fax du 17.01.2011

| Pos. | Description | Quantité commandée | Quantité ouverte | Quantité livrée | |
|---|---|---|---|---|---|
| | Par la présente, nous confirmons que le matériau utilisé par Kubo Tech SA est conforme aux prescriptions de la Food and Drug Administration (FDA) américaine, telles qu'elles sont documentées dans le Code of Federal Regulations (Food and Drugs) titre 21, §177.1550, 177.1520 et 177.2600. | | | | |
| | **PS-Seals jusqu'à 5 bar**<br>exécution usinée | | | | |
| 1 | **2050-00215 v/no. d'art. 405367**<br>Dimension : Ø 22 x 40 x 8 mm<br>Boîtier : 1.4571<br>Lèvre : Gylon blanc<br>Lèvre suppl: FPM (Viton)<br>Pression jusqu'à 5 bar | 40 | 40 | 40 | pcs |

Item No. : 405367
Order No. : 11-0165
Checked : 18 Jan. 2011

Kubo Tech AG
Im Langhag 5
CH-8307 Effretikon

T + 41 52 354 18 18
F + 41 52 354 18 88
info@kubo.ch
www.kubo.ch

Doc No: 13879-14

# FDA Konformität

## GYLON-Weiß, Style 3510
## PS-Seal Elastomer- und Lippenmaterial

GYLON Weiß (Style 3510) erfüllt die FDA-Vorschriften 21 CFR 177.1550 . Diesen Ansprüchen genügen alle Bestandteile und Inhaltstoffe.

Die Füllstoffe sind außerdem akzeptiert unter 21 CFR 177.2600 .

Die Markierungsfarbe erfüllt die Vorschrift 21 CFR 175.300 .

# FDA Conformance

## GYLON Off-White, Style 3510
## PS-Seal Elastomer- and Lip Material

GYLON Off-White (Style 3510) complies with FDA regulation 21 CFR 177.1550 . It meets ingredient and extract requirements.

The fillers are also acceptable under 21 CFR 177.2600 .

The branding ink complies with 21 CFR 175.300 .

FDA - Food and Drug Administration
CFR - Code of Federal Regulations



Kubo Tech AG
Im Langhag 5
CH-8307 Effretikon



GARLOCK
An EnPro Industries Company
SEALING TECHNOLOGIES

Hme Perpignan

Angst+Pfister

**Item No: 414955**
**Order No: 76621**
**Doc No: 13882-0**

## Fiche de spécification technique

Matière: Silicone
Couleur: Translucide
Désignation: MVQ 50

| Propriétés | Norme de test | Valeur | Unité |
|---|---|---|---|
| Dureté | | 50 ±5 | Shore A |
| Résistance à la traction | | ≥ 6 | Mpa |
| Allongement à la rupture | | ≥ 350 | % |
| Densité | | 1,15 ±0,03 | g/cm³ |
| Résistance au déchirement | | 32 | KN/m |
| Déformation rémanente: à 175°C/ 24 h. | ASTM D 395 B | 35 | % |
| Température de service | | -60 à +200 | °C |

Les pièces obtenues avec ce type de silicone sont utilisables dans les applications industrielles, alimentaires, médicales pharmaceutiques.

Homologations : FDA 177.2600
Remarques :

Angst+Pfister AG
Thurgauerstrasse 66
CH-8052 Zürich
Telefon 01/306 61 11
Telefax 01/302 18 71

Angst+Pfister GmbH
Siemensstrasse 2
D-64546 Mörfelden/Ffm
Telefon 0049/610 59 25 40
Telefax 0049/610 52 54 69

Angst+Pfister SA
52, rte du Bois-des-Frères
CH-1219 Genève-Le-Lignon
Telefon 022/796 42 11
Telefax 022/796 07 78

Angst+Pfister Ges.m.b.H.
Leopoldauerstrasse 143
A-1210 Wien
Telefon 0043/125 84 60 10
Telefax 0043/125 84 60 198

Logistikcenter
Hardtstrasse 31
CH-8424 Embrach
Telefon 01/866 61 11
Telefax 01/866 65 22

Angst+Pfister SA
Ch. de Gaulle Cédex
F-95950 Roissy
Telefon 0033/148 63 20 60
Telefax 0033/148 63 26 90

Angst+Pfister SpA
Viale Teodorico 25
I-20149 Milano
Telefon 0039/23 10 61
Telefax 0039/233 10 31 46

Angst+Pfister Ltd
20 Rufford Court
UK-WA14RF Warrington
Telefon 0044/1925 85 24 88
Telefax 0044/1925 85 26 87

Angst+Pfister

**Item No: 427424**
**Order No: 81294**
**Doc No: 14257-0**

# CERTIFICATE FOR

# EPDM 75.5/KW75F

A PRODUCT OF

## ANGST & PFISTER AG

ZÜRICH / SWITZERLAND

ISSUED BY

RCC PRODUCT CERTIFICATION SERVICES
LANDSTRASSE 33
CH-4452 ITINGEN
SWITZERLAND

PHONE +41 61 975 11 11
FAX +41 61 971 50 72

RCC

Angst+Pfister

RCC

Linking science to progress

# Product Certification Services

The detailed composition of below mentioned formulation has been disclosed to **RCC Product Certification Services** by **Angst & Pfister AG, Zürich / Switzerland** with letter of July 07, 2001.

Based on this information we herewith can confirm that

# EPDM 75.5/KW75F

is in compliance with the appropriate food packaging material regulations (see page 2 of this certificate) and therefore may be used in contact with food in

## UNITED STATES OF AMERICA

**Please note:** The material may not be used in contact with milk or edible oils. No other restrictions are applicable for this product.
This certificate is limited to the formulation disclosed to RCC as mentioned above. Any change of the formulation will void the certificate automatically. Any changes in this formulation must be addressed to RCC immediately.

It is the responsibility of the manufacturer of the final article, that it complies with the specifications and limitations (end tests) in all applicable regulations.

ppa. U. Wietschorke

SWISS CERTIFICATION NO

Dr. T. Wallenhorst

Itingen, July 20, 2001
Expiration date: July 20, 2004
RCC Project 827008 / WAT



RCC PRODUCT CERTIFICATION SERVICES – accredited by the Competent Authorities according to EN 45011 as CERTIFICATION BODY operating product certification – an individual department of RCC Ltd.
Accredited services are defined in the official directory of

Angst+Pfister

RCC

Linking science to progress

## USA

Code of Federal Regulations, Title 21 – Food and Drugs. Revised as of April 1, 2001, section 177.2600 – Rubber articles intended for repeated use – and section 177.1520 – Olefin polymers.

**Müller GmbH**
Industrieweg 5
D-79618 Rheinfelden

Systemtechnik in Edelstahl
Behälter / Gehäuse
Handlinggeräte

Qualitätsmanagement
ISO 9001:2000

Telefon: +49 (0)7623 / 969-0
Telefax: +49 (0)7623 / 969-69

E-Mail: info@mueller-gmbh.com
Internet: www.mueller-gmbh.com

MÜLLER®

## FDA- Bestätigung für Silikone

## FDA- Confirmation for silicones

## FDA- Confirmation pour des matières en silicone

Wir bestätigen hiermit, dass die Rohstoffe unserer Silikon-Qualitäten den Richtlinien der Food and Drug Administration FDA 21 CFR §177.2600 entsprechen.

Die Verarbeitung erfolgt nach den Richtlinien der Rohstoffhersteller.
Sie können als physiologisch unbedenklich gem. FDA eingestuft werden.

We confirm, that the silicone qualities are manufactured from materials which correspond with the directives from the Food and Drug Administration FDA 21 CFR §177.2600.

The processing is effected according to the directives of the raw material suppliers.
These articles can physiologically be recognized as safe according FDA.

Nous certifions que les matières premières de nos qualités en silicone correspondent aux directives de Food and Drug Administration FDA 21 CFR §177.2600.

Le traitement est effectué selon les directives des fabricants de matières premières.
On peut les classifier physiologiquement comme neutre selon FDA.

Stand/state/état:
01/ 2006

Your order no.: 89330 Part no.: 0102428 + 0102424
Our order no.: VK065697 Drawing no.: .....
Pos. no. of order: 2 + 4 Pos. no. of drawing: .....

**Doc No: 17180-1**

Item No.: 411313 – 414548
Order No.: 89330
Checked: 13. 10. 2006

SINCE 1887

**HAVER & BOECKER**
WIRE WEAVING AND ENGINEERING WORKS

HAVER & BOECKER · D-59299 OELDE Germany

**Item No: 408448**
**Doc No: 21026-1**

☎ DIRECT-DIALING ++49-2522-30 759
E-MAIL f.general@haverboecker.com
YOUR CONTACT Frank General

| YOUR REF | YOURS OF | OUR REF | DATE |
|---|---|---|---|
| | | PN/Gen | 2004-08-11 |

**FDA Konformität**
**Granuliersiebeinfassung aus Elastollan 1185, transparent, 85 Shore A**

Die zur Herstellung der Produkte des Elastollan Types 1185 transparent 85 Shore A eingesetzten Roh- und Zusatzstoffe (ausgenommen Stabilisatoren) sind im

**Code of Federal Regulations (CFR), Title 21 § 177.2600**

"rubber articles intended for repeated use" der FDA vom 01.04.2004 gelistet.

Die verwendeten Antioxidantien/Stabilisatoren sind im

**§ 178.2010 "Antioxidants and/or Stabilizers for polymers"**

aufgeführt

Die Rezeptur des Produktes Elastollan 1185 transparent kann nach § 177.2600 der FDA bei der Herstellung von Produkten für Anwendungen in Kontakt mit trockenen (jedoch nicht als Verpackungsmittel) und feuchten Lebensmitteln (Kurzzeitkontakt – höchstens 10 Minuten) grundsätzlich eingesetzt werden.

Anforderungen an das Fertigprodukt bzw. Analyseverfahren sind bei § 177.2600 in Absätzen (e) und (f) angesprochen.

HAVER & BOECKER

i.A. F.General

i. A. Dipl. Ing. B. Vogelpohl

Angst+Pfister

# Fiche de spécification technique

| | |
|---|---|
| Matière: | Silicone |
| Couleur: | Translucide (peut être teinté) |
| Désignation: | MVQ 60 (Tuyau) |

| Propriétés | Norme de test | Valeur | Unité |
|---|---|---|---|
| Dureté | DIN 53505 | 60 ±5 | Shore A |
| Résistance à la traction | DIN 53504-S1 | 10,50 | $N/mm^2$ |
| Allongement à la rupture | DIN 53504-S1 | 500 | % |
| Poids spécifique | DIN 53479 A | 1,17 | $g/cm^3$ |
| Déformation rémanente: | | | |
| à 175°C/ 22 h. | DIN 53517 | 30 | % |
| Température de service | | -60 à +200 | °C |

Résistant à l'eau, l'air chaud, le vieillissement et les intempéries, utilisable pour des applications alimentaires et médicales.

Homologations: conforme FDA §177.2600; USP Class VI; BGW/BGA XV

Remarques:

Angst+Pfister AG
Thurgauerstrasse 66
CH-8052 Zurich
Telefon 01/306 61 11
Telefax 01/302 18 71

Angst+Pfister SA
52, rte du Bois-des-Frères
CH-1219 Genève-Le-Lignon
Telefon 022/796 42 11
Telefax 022/796 07 78

Logistikcenter
Hardhofstrasse 31
CH-8424 Embrach
Telefon 01/866 61 11
Telefax 01/866 65 22

Angst+Pfister SpA
Viale Teodorico 25
I-20149 Milano
Telefon 0039/33 10 61
Telefax 0039/233 10 31 48

Angst+Pfister GmbH
Siemenstrasse 2
D-64546 Mörfelden/Flm
Telefon 0049/610 59 25 40
Telefax 0049/610 52 54 69

Angst+Pfister Ges.m.b.H.
Leopoldauerstrasse 143
A-1210 Wien
Telefon 0043/125 84 60 10
Telefax 0043/125 84 60 198

Angst+Pfister SA
Ch. de Gaulle Cédex
F-95950 Roissy
Telefon 0033/148 63 20 80
Telefax 0033/148 63 26 90

Angst+Pfister Ltd
20 Rufford Court
UK-WA14RF Warrington
Telefon 0044/1925 85 26 88
Telefax 0044/1925 85 26 87

16.11.2001

***Item No: 433239***
***Order No: 85131***
***Doc No: 21871-0***

**Doc No: 26019-4**

TRE Engineering GmbH
Aussergrütstrasse 2
CH-6319 Allenwinden

Tel. 041 727 27 70
Fax 041 727 27 71
E-Mail office@tregmbh.ch
www.tregmbh.ch

# CERTIFICATE OF CONFORMITY

For the materials listed below our producer is giving the following confirmation :

**Stainless steels**.

We are only using stainless steel grades which are corresponding with the require- ments of the food industry and are strictly produced according to the existing stan- dards.

**Materials for joints in Clamping connections and screwed pipe connection with nut**

Materials for joints which are commonly being used in the food industry are :

- **NBR**
- **EPDM**
- **VMQ**
- **FKM**
- **PTFE**

We are confirming that the articles listed below comply regarding the raw material selection exactly with FDA-regulations § 177.2600 :

- **gaskets NBR,**
- **gaskets EPDM,**
- **gaskets VMQ,**
- **gaskets FKM,**
- **gaskets PTFE,**
- **gaskets enveloped PTFE-FKM**

all six in sizes from DN 6 to DN 300 and 1/2" to 12".

The selected raw materials for these articles are complying with the FDA-regulations 21, CFR 177.1550, as well as with the BGA recommandations, 160ieth communication, recommandation LI of March 1st 1983.

TRE ENGINEERING GmbH

January 2009

Item No. : 403230
Order No. : 10 - 1022
Checked : 19. 7. 2010

**Doc No: 28247-5**

CONNECTORS VERBINDUNGSTECHNIK AG

# Konformitätserklärung – Certificate of Conformity

Connectors Dok.-Ref.: CVAG_K003_0001.4.doc

Wir bestätigen hiermit, dass die Elastomere Buna-N, EPDM, MVQ (Silikon) und FPM/FKM (z. B. VITON®) aus denen unsere Teile hergestellt werden, durch die National Sanitation Foundation geprüft und zertifiziert wurden, dass sie in Übereinstimmung sind mit dem derzeit gültigen F.D.A. Code of Federal Regulations für Gummi und gummiähnliche Materialien unter Titel 21, §177.2600 und dass sie auch den Kriterien der Class-I Werkstoffklassifizierung der 3-A Gesundheitsnormen, U.S.D.A. und „Standard 51", N.S.F. erfüllen.

Wir bestätigen hiermit, dass die Fluorkunststoffe PTFE und FEP (z.B. TEFLON®), aus denen unsere Teile produziert werden, Labor geprüft sind und als in Übereinstimmung befunden wurde mit dem derzeit gültigen F.D.A. Code of Federal Regulations für TEFLON®- und Fluorkunststoffe unter Titel 21, §177.1550 für den Einsatz in Kontakt mit Lebensmitteln und dass sie auch die Kriterien der Class-I Werkstoffklassifizierung der 3-A Gesundheitsnorm erfüllen.

Wir bestätigen hiermit, dass alle Elastomere und Fluorkunststoffe Labor geprüft sind und als in Übereinstimmung befunden wurde mit der derzeit gültigen U.S. Pharmacopeia Klasse VI, Sektion <88> biologische Reaktivität, in vivo.

---

We hereby certify that the elastomer compounds, Buna-N, EPDM, MVQ (Silicone) and FPM/FKM (e.g. VITON®) from which our parts are manufactured have been tested and certified by the National Sanitation Foundation to be in compliance with the current F.D.A. Code of Federal Regulations for rubber and rubber-like materials under Title 21, §177.2600 and also meet the criteria of the current Class-I material classification of the 3-A Sanitary Standards, U.S.D.A., and „Standard 51" of the N.S.F.

We hereby certify that the fluoropolymers PTFE and FEP (e.g. TEFLON®) from which our parts are produced have been tested in the laboratory and are found to be in compliance with the current F.D.A. Code of Federal Regulations for Teflon® and fluorocarbon resins under Title 21, §177.1550 for use in contact with food, and also meet the current criteria of the Class-I material classification of the 3-A Sanitary Standard.

We hereby certify that all elastomer compounds and Teflon® resins have been tested and certified by the Toxicon laboratory to be in compliance with the current criteria of the U.S. pharmacopeia Class VI, section <88> biological reactivity, in vivo.

Tagelswangen, 01.09.2008
CONNECTORS Verbindungstechnik AG

Christian Wyniger
Quality Manager

Item No. : 405284 – 423856
Order No. : 09-0016
Checked : 9 janvier 09

Ringstrasse 24, Postfach
CH - 8317 Tagelswangen

Tel. ++41 (0) 52 354 20 70
Fax. ++41 (0) 52 354 20 80

E-Mail: info@connectors.ch
Web: http://www.connectors.ch

**Doc No: 48620-1**

STERIVALVES
Process Advantage

**SteriValves S.r.l.**
Via E. Mattei, 393
55100 LUCCA
ITALY
VAT IT01722430467

(+39) 0583 440 560
(+39) 0583 440 559
info@sterivalves.eu
www.sterivalves.eu

Modular System Valves and Accessories for the Pharmaceutical, Chemical and Food Industries

# CONFORMITY DECLARATION
## KONFORMITÄTSERKLÄRUNG
## DÉCLARATION DE CONFORMITÉ
## Dichiarazione di conformità

With the present we state that the EPDM compound we utilized for the vulcanization of the SilCap is recommended and approved for food applications. This polymer is suitable to be utilize with food, in accordance to Food and Drug Administration (FDA) Regulation 21 CFR 177.2600. Furthermore we state that the carbon black utilized in this compound assure a certain grade of conductivity.

Hiermit erklären wir, dass die für die Vulkanisation der SilCap verwendete EPDM-Mischung für Anwendung in der Lebensmittelindustrie geeignet ist. Dieses Polymer ist geeignet für die Lebensmittelindustrie nach der Food und Drug Administration (FDA) Regulation 21 CFR 177.2600. Außerdem erklären wir, dass das in der Mischung verwendete Carbon Black eine gewisse Leitfähigkeit gewährleistet.

Par la présente nous déclarons que le mélange EPDM utilisé pour la vulcanisation des SilCap est recommandé et approuvé pour applications dans l'industrie alimentaire. Ce polymère est aptes pour l'industrie alimentaire selon la Food and Drug Administration (FDA) Regulation 21 CFR 177.2600. Nous déclarons encore, que le carbon black utilisé dans ce mélange garantit une certain conductivité.

Con la presente dichiariamo che la mescola EPDM utilizzata per i SilCap è approvata per utilizzi in campo alimentare. Questo polimero è consigliato ed indicato ad uso alimentare, secondo FDA § 177.2600. Inoltre dichiariamo che il carbon black è un grado conduttivo, tale da assicurare un certo livello di conduttività della mescola.

**SteriValves S.r.l.**
Quality Manager
Dr. Gianfranco Nelli

Gianfranco Nelli

STERIVALVES
Process Advantage

**SteriValves S.r.l.**
Via E. Mattei, 393
55100 LUCCA
ITALY
VAT IT01722430467

(+39) 0583 440 560
(+39) 0583 440 559
info@sterivalves.eu
www.sterivalves.eu

Modular System Valves and Accessories for the Pharmaceutical, Chemical and Food Industries

# TESTS DECLARATION

## DICHIARAZIONE PROVE

With the present we declare that the surface resistivity test on our polymer EPDM was executed. Two electrodes, positioned at the diagonal extremities of a square plate (thickness 2mm) with sides 20cm long, that were applied with an electric potential difference of 10 Volts, were measured with a value of superficial electrical resistance minus of 1000 Ohm.

Con la presente dichiariamo che il test di resistività per il nostro polimero EPDM è stato eseguito. A due elettrodi con una differenza di potenziale di 10 Volt, posti alle estremità della diagonale di una placca (spessore 2mm) quadrata di lato 20 cm, è stato misurato un valore di resistenza elettrica superficiale inferiore a 1000 Ohm.

**SteriValves S.r.l.**
Quality Manager
Dr. Gianfranco Nelli

Gianfranco Nelli

Angst+Pfister

**Item No: 450611**
**Doc No: 52596-0**

# Fiche de spécification technique

| | |
|---|---|
| Matière: | Silicone |
| Couleur: | Translucide (peut être teinté) |
| Désignation: | MVQ 60 (Tuyau) |

| Propriétés | Norme de test | Valeur | Unité |
|---|---|---|---|
| Dureté | DIN 53505 | 60 ±5 | Shore A |
| Résistance à la traction | DIN 53504-S1 | 10,50 | $N/mm^2$ |
| Allongement à la rupture | DIN 53504-S1 | 500 | % |
| Poids spécifique | DIN 53479 A | 1,17 | $g/cm^3$ |
| Déformation rémanente: | | | |
| à 175°C/ 22 h. | DIN 53517 | 30 | % |
| Température de service | | -60 à +200 | °C |

Résistant à l'eau, l'air chaud, le vieillissement et les intempéries, utilisable pour des applications alimentaires et médicales.

Homologations: conforme FDA §177.2600; USP Class VI; BGW/BGA XV

Remarques:

Angst+Pfister AG
Thurgauerstrasse 66
CH-8052 Zurich
Telefon 01/306 61 11
Telefax 01/302 18 71

Angst+Pfister GmbH
Siemenstrasse 2
D-64546 Mörfelden/Ffm
Telefon 0049/610 59 25 40
Telefax 0049/610 52 54 69

Angst+Pfister SA
52, rte du Bois-des-Frères
CH-1219 Genève-Le-Lignon
Telefon 022/796 42 11
Telefax 022/796 07 78

Angst+Pfister Ges.m.b.H.
Leopoldauerstrasse 143
A-1210 Wien
Telefon 0043/125 84 60 10
Telefax 0043/125 84 60 198

Logistikcenter
Hardhofstrasse 31
CH-8424 Embrach
Telefon 01/866 61 11
Telefax 01/866 65 22

Angst+Pfister SA
Ch. de Gaulle Cédex
F-95950 Roissy
Telefon 0033/1 48 63 20 80
Telefax 0033/1 48 63 26 90

Angst+Pfister SpA
Viale Teodorico 25
I-20149 Milano
Telefon 0039/33 10 61
Telefax 0039/233 10 31 48

Angst+Pfister Ltd
20 Rufford Court
UK-WA14RF Warrington
Telefon 0044/1925 85 26 88
Telefax 0044/1925 85 26 87

**Doc No: 114572-2**

Donaldson Filtration Deutschland GmbH
Büssingstraße 1
D-42781 Haan
Germany

www.donaldson.com

Donaldson.

**Quality certificate**

We confirm that the Donaldson Filtration Deutschland high efficiency filter element

| | |
|---|---|
| Type: | (P)-SRF N |
| Filter media: | Borosilicate |
| Absolute retention rate: | 99,99998% at 0,2µm, 99,9999998% at 0,02µm |
| Support material: | Stainless steel |

is produced, packaged and shipped under the strictest control, and, at a minimum, conforms with exact quality and performance standards as specified in product data sheets. No changes in critical filter specifications will be made without notification in advance. All products have been inspected and released by Quality Assurance as having met the following requirements:

- The filter elements are completely assembled, tested and packaged in an accredited DIN EN ISO 9001 facility.
- All filter elements are 100% integrity tested according to EN 1822 and ASTM D 2986-91 (Aerosol Challenge Test). The retention rate complies with the product specification of 99,99998% at 0,2µm.
- All components comply to the FDA regulations for food contact use according to CFR (Code of Federal Regulations) Title 21.
- All filter elements are fabricated without the use of binders, adhesives, additives or surface-active agents.
- All filter elements are manufactured from high quality, non-toxic as well as biologically inert raw materials.
- This filter element was manufactured with a Borosilicate filter matrix which meets the criteria for a "non-fibre" releasing filter as defined in 21 CFR 210.3 (b)(6).
- The level of extractables of an 10" cartridge after 24 hours in a 70/30% IPA/Water mixture at 20°C was equal to or less than 35mg.
- The typical flow rate of a 10" filter element of this type is equal to or larger than 400 Nm3/h at a differential pressure of 50 mbar at 8 bar abs (20°C).
- All delivered filter elements (P)-SRF, (P)-SRF N and (P)-BE are not sterilized by plant.
- Do **NOT** use organic solvents to clean or disinfect the element prior to use!

*Product Line Manager*

Dr. P. Schwarz

*Quality Representative*

M. Pohlmann

Haan, September 2009

Donaldson Filtration Deutschland GmbH
Büssingstraße 1
D-42781 Haan
Germany

www.donaldson.com

Donaldson

# P-SRF N

**Product description:**
The P-SRF N is a pleated depth filter for sterile filtration of compressed air, process air, technical gases and vent applications. The retention rate is 99,99998% related to 0,2 µm. The P-SRF N combines great strength, long service life, high safety and high flow rates and can dramatically reduce costs by cartridge usage. All components meet the FDA requirements for the contact with food in accordance with the CFR requirements (Code of Federal Regulations), title 21. The filter is manufactured according to DIN EN ISO 9001.

| Materials and CFR Title 21 | | |
|---|---|---|
| Filter Media | Borosilicate glass fibers | 177.2260 |
| Coating | PDMS | 177.2260 |
| Support | Stainless steel 1.4301 | 211.56 |
| Cage / Core | Stainless steel 1.4301 | 211.56 |
| End Caps | Stainless steel 1.4301 | 211.56 |
| O-Rings | Silicone, EPDM, Buna N | 177.2600 |
| Sealing Compound | Silicone | 177.2600 |

**Application:**
The P-SRF N sterile filters are designed for the following applications

- Food & Beverage Industry
- Pharmaceutical Industry
- Biotech Industry
- Health Care
- Aseptic Packaging
- Chemical Industry
- Breweries
- Dairies

**Absolute Retention rate:**
99,99998% related to 0,2 µm

**Effective Filtration Area (nominal):**
0,84 m2 per 10" (254 mm) element
For other sizes see correction factor CF

**Bacterial / Viral Retention:**
P-SRF N filter elements have been scientifically validated from an independent institute by:

- Brevundimonas (Pseudomonas) diminuta aerosol challenge, LRV >7 /cm$^2$
- MS-2 Coliphages Aerosol Challenge, LRV >9 /cm$^2$

**Operating Conditions:**
Maximum Differential Pressure:
5 bar (75psid) (-20°C up to 150°C), independent of the system pressure or the flow direction
Typical Continuous Air Service Life: 12 months
Typical Vent Service Life: 6 months

**Temperature Range:**
-20 °C (-4 °F) to 200°C (400°F)
>150°C (300°F) only for dry compressed air

**Dimensions:**

| Element size | A [mm] | B [mm] | Ø C * [inch] | Ø D [mm] | CF |
|---|---|---|---|---|---|
| 03/10 | 76 | 11 | ¾" | 52 | 0,12 |
| 04/10 | 104 | 11 | ¾" | 52 | 0,17 |
| 04/20 | 104 | 14 | 1" | 52 | 0,17 |
| 05/20 | 128 | 14 | 1" | 52 | 0,21 |
| 05/25 | 128 | 14 | 1" | 62 | 0,29 |
| 07/25 | 180 | 14 | 1" | 62 | 0,42 |
| 07/30 | 180 | 16 | 2" | 86 | 0,70 |
| 10/30 | 254 | 16 | 2" | 86 | 1,00 |
| 15/30 | 381 | 16 | 2" | 86 | 1,28 |
| 20/30 | 510 | 16 | 2" | 86 | 2,00 |
| 30/30 | 764 | 16 | 2" | 86 | 2,56 |

* Plug-type connection with double-o-ring
CF: Correction Factor filter area

Donaldson Filtration Deutschland GmbH
Büssingstraße 1
D-42781 Haan
Germany

www.donaldson.com

Donaldson
Filtration Solutions

**Manual for Installation and Sterilization**

Applicable to: (P)-SRF, (P)-SRF N, (P)-BE

This document is just a recommendation and will help you to operate and sterilize your Donaldson filter element in an optimum way retaining integrity and extending service life. All methods mentioned below have been tested in day to day practise. Please be aware that all sterilization methods potentially have to be adapted to your system and conditions. Our recommendation will not absolve you from the responsibility to validate your filtration system. Please refer to the manufacturer or to your sales representative for a detailed sterilization guide or if you have any further questions about this manual or other aspects regarding your filtration system.

**Installation (1. – 6.) & De-installation (7.) of P-SRF N filter elements:**
Donaldson filters are available in a number of different adapter and O-ring configurations designed to fit modern filter housings. The filter should fit snugly in the housing. Improper installation can impair filtration efficiency.

1. Verify that the correct filter part number for the application has been chosen.
2. If autoclave sterilization is used, sterilize the filter in a suitable sterilization bag before installation.
3. Keep the filter in its plastic bag to avoid contaminating the filter element as long as possible. Cut open the bag at the O-ring end. While holding the bagged filter element, if necessary lubricate the O-rings by dipping the O-rings into clean water or other suitable liquid compatible with the process fluid.
4. Line up the open end of the filter element with the housing seat and install using a slight twisting motion while holding the bagged filter near the O-ring end. Verify that the O-rings are fully seated and not twisted. If the cartridge has locking tabs, rotate the tabs into place with a clockwise motion until engaged. **Attention: only rotate cartridges while firmly grasping the O-ring end of the cartridge to prevent excessive torque damage to the filter (Picture 1 – 2).**
5. Repeat with additional filters. Remove protective bags from the filter elements. If present, install filter retainer system (plate or spring). Reassemble housing.
6. If inline sterilization is used, sterilize the filter before the first use.
7. To uninstall the element (e.g. for autoclave sterilization), grasp the filter firmly at the O-ring end and rotate it anticlockwise to release locking tabs. Pull the element carefully out of the seat in vertical direction using a slight twisting motion. **Avoid to cant the cartridge to prevent damage to the filter (Picture 3 – 4).**

**Sterilization:**
The sterilization time for inline-sterilization of filter cartridges differs depending on the used sterilization temperature. The complete sterilization cycle time consists of a heating and a cooling phase plus the sterilization phase.

| ϑ in °C | Sterilization phase | Heating & cooling phase | Entire sterilization cycle |
|---|---|---|---|
| 121 - 125 | 30 min. | 15 min. & 15 min. | 60 min. |
| 131 – 135 | 15 min. | 15 min. & 15 min. | 45 min. |
| 141 | 10 min. | 15 min. & 15 min. | 40 min. |

These sterilization times are valid for both steam in place and autoclave sterilization.

Donaldson Filtration Deutschland GmbH
Büssingstraße 1
D-42781 Haan
Germany

www.donaldson.com

**Inline-Sterilization (Steam in Place):**
For Steaming in Place (SIP), the steam should be free of rust and other particulates. The housing should be cleaned before the cartridge is installed. To assure sterilization, steam pressure in the assembly must not be allowed to fall below 15 psi (1 bar) or 250°F (121°C). Condensate should be drained from the system during sterilization.

- Always vent trapped air from the housing.
- Upstream and downstream gauges must be provided to verify that the differential pressure across the filter does not exceed 5 psi (0,3 bar) during any of the sterilization steps.
- Drain condensate from the housing and pipes during sterilization.
- Fill the housing with the process liquid with air that has the same pressure as the used steam.
- Allow the system to cool and keep the system under pressure until ready for use.

Always use the lowest possible sterilizing temperature to avoid surplus stress on the element.

**Autoclave sterilization:**
It is possible to sterilize the cartridge only or cartridge and housing together in an autoclave.

- To sterilize the filter element only, use a special sterilizing bag and insert it into the autoclave. The O-ring end should face down to allow condensate to flow out. Sterilize and dry the filter, then install it again using aseptic techniques.
- To sterilize both, filter element and housing, install the cartridge into the housing. Rinse the filter thoroughly with clean water and cover the inlet and outlet of the housing with autoclave wrap or aluminium foil. Vent and valve drains should be open. Sterilize the assembly, then allow the housing to cool and dry before aseptic installation.

After sterilization, integrity test the filter if desired.

**Element drying:**
To avoid damage of the filter after sterilization, start the fluid flow slowly. Allow the element to dry for several minutes, meanwhile keeping the flow so low as to maintain a differential pressure below 7 psi (0,5 bar).

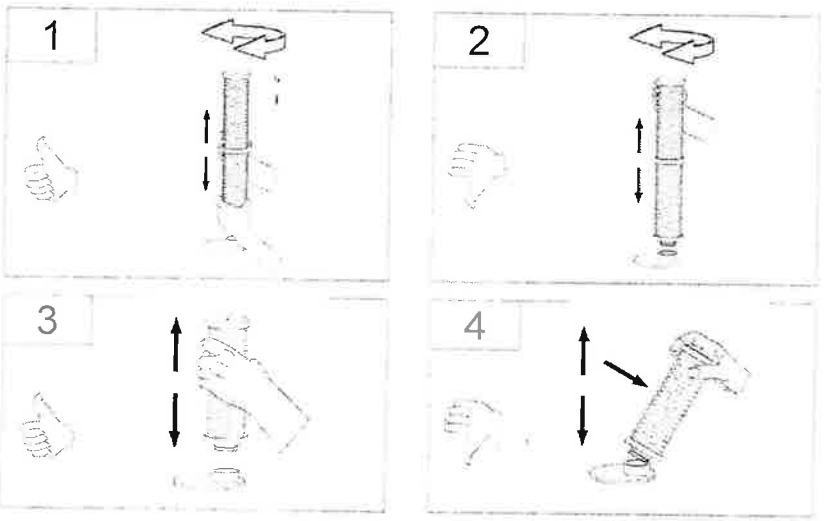

**Doc No: 114604-1**

Spianate, lì 28.09.2009

# LISTA DEI CERTIFICATI
*CERTIFICATES LIST*

# *SOLE VALVE*

| | |
|---|---|
| **Commessa CO.RA**<br>*CO.RA. Work Order* | M/ 09/ 693/ RR; |
| **Ordine Cliente**<br>*Customer order* | CDF-09-2466 of 17/ 09/ 2009; |

| Pag. | Articles | Description | Material | Heat N° |
|---|---|---|---|---|
| 1 | Resume | | | |
| 2 | Half Body | W 200 | Aisi 316L | L 3518 |
| 3 | SS Vane | F 200 | Aisi 316L | 1137 |
| 3 | Pin Disk | ∅ 20 | Aisi 316L | 1137 |
| 4 | Gasket | ND 200 | SI+PTFE | Certificate of Conformità N° 09/ 049+126; |
| | | | | |

Item No. : 4553/14
Order No. : 09 - 2466
Checked : 2 Oct. 09
Rg K.



**CO.RA. s.r.l.** - 55010 Spianate - Altopascio (Lucca) - Italy - Loc. Chiappini, 51
Tel. ++39 0583 20590 r.a. - Fax ++39 0583 20481 - info@coraitaly.net - www.coraitaly.net
Cod. Fisc. e Part. IVA IT01352090466 - R.E.A. 135182 - M. LU003682 - Cap. Soc. € 93.600,00 I.V.

CO.RA. s.r.l.
Loc. Chiappini n. 51
55010 SPIANATE - ALTOPASCIO (LU)
Tel. 0583.20590 r.a. - Fax 0583.20[illegible]
Partita IVA 01352090466

**Cert. N° 49092**

FOGLIO DI
BLATT - PAGE VON - OF
FEUILLE DE

CERTIFICATO MATERIALI - MATERIAL CERTIFICATE - WERKSTOFF PRUEFZEUGNIS - CERTIFICAT MATIERE

CLIENTE
CUSTOMER **CORA**
KUNDE
CLIENT

ORDINE N.
ORDER N. **479**
BESTELLUNG N.
COMMANDE N.

SEC./ACC.TO/NACH/SELON

| | |
|---|---|
| EN 10204/2.2 | |
| EN 10204/3.1 | X |
| EN 10204/3.2 | |

DESCRIZIONE SPEDIZIONE - DESCRIPTION OF DELIVERY - UMFANG DER LIEFERUNG - DETAILS DU LOT

| COLATA N. / HEAT NR. / SCHMELZE NR. / NO. DE COULEE | QUANTITÀ / QUANTITY / STUECKZAHL / QUANTITÉ | DENOMINAZIONE - DESCRIZIONE / DESCRIPTION - SIZE | GEGENSTAND - ABMESSUNG / DESIGNATION - DIMENSION |
|---|---|---|---|
| L 3518 | 2 | TUBES DIAM. 258 X 187 X 2670mm | |

COPIA CONFORME ALL'ORIGINALE

ANALISI CHIMICA - CHEMICAL ANALYSIS - CHEMISCHE ZUSAMMENSETZUNG - COMPOSITION CHIMIQUE

| LEGA / ALLOY | | C | Cr | Ni | Mo | Mn | Si | P | S | | | | | | |
|---|---|---|---|---|---|---|---|---|---|---|---|---|---|---|---|
| LEGIERUNG | MIN | | 16,000 | 10,000 | 2,000 | | | | | | | | | | |
| ALLIAGE | MAX | 0,030 | 18,000 | 14,000 | 3,000 | 2,000 | 1,000 | 0,045 | 0,030 | | | | | | |
| AISI 316L | | 0,027 | 17,264 | 10,932 | 2,261 | 1,578 | 0,922 | 0,028 | 0,013 | | | | | | |

PROPRIETÀ MECCANICHE - MECHANICAL PROPERTIES - MECHANISCHE EIGENSCHAFTEN - ESSAIS MECANIQUES

| Rp 1% (MPa) | Rp 0.2% (MPa) | Rmn (MPa) | A (%) | Z (%) | HB | Resilienza - Resilience Kerbschlagzaehigkeit - Impact T= | | | |
|---|---|---|---|---|---|---|---|---|---|
| | | | | | | KV JOULE | KCU JOULE | DVM JOULE | LE mmq |
| min = | min = 170 | >485 | min = 30 | min = 50 | <237 | | | | |
| | 234 | 541 | 52 | 62 | 175 | | | | |
| | | | | | | | | | |
| | | | | | | | | | |

| | |
|---|---|
| **Prove speciali**<br>Special tests<br>Spezifische Pruefungen<br>Essais Specieux | EXECUTION AS PER ASTM A451/530 |
| **Trattamento termico**<br>Thermal Treatement<br>Thermische Behandlung<br>Traitement Thermique | SOLUTION TREATMENT 1080°C/WATER |
| **Osservazioni**<br>Remarks<br>Bemerkungen<br>Observations | MELTING: ELECTRIC (INDUCTION) |

18/05/06 Resp. laboratorio F Resp. qualità F Ente collaudo

N 3 X CATTANEO

N 2 X ROCCA

CO.RA®

**Werkszeugnis**
**Test report**

**EN 10204:2005 / 2.2**

| | | | |
|---|---|---|---|
| **Rendelő**<br>Bestteler<br>Customer | CO.RA s.r.l. | **Szállítási feltételek és/ vagy előírások**<br>Lieferbedingungen und/oder amtliche Vorschriften<br>Terms of delivery and/or other specifications | **Lap**<br>Blatt-Nr.<br>Sheet-No. 1. |
| **Rendelésszám**<br>Bestellung-Nr.<br>Order-No. | 633/I | **Bizonylatszám**<br>Zeugnis-Nr.<br>Certificate-No. 07. | **Kelt**<br>Datum<br>Date 21.09.2007. |
| **Megnevezés**<br>Bezeichnung<br>Description | Butterfly disk<br>DN 200 | **Rajzszám**<br>Zeichnung-Nr.<br>Drawing No. 4973 | **Alapanyag**<br>Werkstoff<br>Material 316L |
| **Szállítási állapot**<br>Lieferzustand<br>Condition of delivery | Machined<br>Polished | **Kódszám**<br>Modell Nr.<br>Pattern No. 063-002-10-0 | **Tömeg, kg/db**<br>Gewicht, Kg/Stk.<br>Weight, kg/pc. 1,800 |

| Sorszám<br>Pos.<br>Item | Adagszám<br>Schmelze<br>Charge-No. | Darabszám<br>Stückzahl<br>Number | Kémiai összetétel / Chemische Zusammensetzung / Chemical composition (%) | | | | | | | | |
|---|---|---|---|---|---|---|---|---|---|---|---|
| | | | C | Si | Mn | P | S | Cr | Mo | Ni | |
| Specification minimum | | | | | | | | *16,00* | *2,00* | *10,00* | |
| | 1137 | 72 | 0,028 | 0,950 | 1,22 | 0,0220 | 0,0110 | 17,750 | 2,120 | 10,460 | |
| Specification maximum | | | *0,030* | *1,00* | *2,00* | *0,045* | *0,030* | *18,00* | *3,00* | *14,00* | |

| Sorszám<br>Pos.<br>Item | Adagszám<br>Schmelze<br>Charge-No. | Mechanikai értékek / Festigkeitswerte / Mechanical properties | | | | | | |
|---|---|---|---|---|---|---|---|---|
| | | $R_p$ 0,2%<br>N / mm² | Rm<br>N / mm² | A5<br>% | Z<br>% | Keménység<br>Härte<br>Hardness | Ütőmunka, J / cm²<br>Kerbschlagbiegeversuch<br>Impact test | |
| Spec. minimum | | | | | | | | |
| | | | | | | | | |
| Spec. maximum | | | | | | | | |

**Gyártómű jele**
Herstellerzeichen
Brand of the manufacturer

**Kiállította**
Aussteller
Completed by *Dukay Aladárné*

**Szakértő jele**
Stempel des Werkssachverständigen
Inspector's stamp

**Szakértő aláírása**
Unterschrift des Werkssachverständigen
Inspector's signature *Somogyi Sándor*

COPIA CONFORME ALL'ORIGINALE

**MF 7.3-01-01**

CO.RA. s.r.l. - 55010 Spianate - Altopascio (Lucca) - Italy - Loc. Chiappini, 51
Tel. ++39 0583 20580 r.a. - Fax ++39 0583 20481 - info@coraitaly.net - www.coraitaly.net
Cod. Fisc. e Part. IVA IT01352090469 - R.E.A. 135182 - M. LU003662 - Cap. Soc. € 93.600,00 I.V.

Spianate, lì 16.06.2009

# DICHIARAZIONE DI CONFORMITA'

## *CONFORMITY DECLARATION*

*N° 09/ 049+ 0126.*

**Informazione Prodotto/*Product Information***

| | |
|---|---|
| Prodotto<br>*Product* | : Rivestimento in PTFE Rigido;<br>*PTFE Rigid Coating;* |
| Codice Identificazione Prodotto<br>*Identification Code* | : CO.RA. DN 200 Coated PTFE; |
| Lotto Rivestimento PTFE N°<br>*PTFE Coating Lot N°* | : 09/0126-AA17861; |
| Lotto Silicone N°<br>*Silicone Lot N°* | : 09/ 049; |
| Diametro Nominale<br>*Nominal Diameter* | : 200 mm; |
| Materiale Rivestimento<br>*Coating Material* | : Rivestimento in PTFE Rigido Sp=0,8 mm , tipo TF1750<br>Rigid PTFE (Polytetrafluorethylene), 0,8mm, Type TF1750; |
| Codice Mescola Silicone<br>*Silicone Compound* | : Mescola Silicone Bianco SH A 30, MG7709B30;<br>*VMQ blank 30 SH A, MG7709B30;* |

**Caratteristiche Meccaniche/*Physical Test*:**

| | | | |
|---|---|---|---|
| Durazza/ Hardness: | Anima, Silicone | – (UNI 4916) | : Shore A (Sh A) 34; |
| | Rivestimento, PTFE | – (ASTM D2240) | : Shore D (Sh D) 63; |
| Densità/ Density | : Anima, Silicone | – (UNI 7092-A) | : 1,08 g/cm³ ; |
| | Rivestimento, PTFE | – (ASTM D792) | : 2,15 g/cm³ ; |
| Massima Temperatura Operativa, T max<br>*Maximum Operating Temperature, T max* | | | : 230 °C; |

The product above mentioned has been obtained from vergin PTFE powder, free of any other component, transformed following the most modern technical process and in conformity to the related technical specifications, drawings and orders. The raw materials used for the vergin PTFE powder are in according to the standard FDA, CFR 21 Parts 170 to 199 Item 177.1550. The informations in this declaration are correspondent to origin certificates.

**CO.RA. S.r.l.**
Quality Assurance Department



**CO.RA. s.r.l.** - 55010 Spianate - Altopascio (Lucca) - Italy - Loc. Chiappini, 51
Tel. ++39 0583 20590 r.a. - Fax ++39 0583 20481 - info@coraitaly.net - www.coraitaly.net
Cod. Fisc. e Part. IVA IT01352090466 - R.E.A. 135182 - M. LU003682 - Cap. Soc. € 93.600,00 I.V.

**Doc No: 136546-1**

**Müller GmbH**
Industrieweg 5
D-79618 Rheinfelden

Systemtechnik in Edelstahl
Behälter / Gehäuse
Handlinggeräte

Qualitätsmanagement
ISO 9001:2008

Telefon: +49 (0)7623 / 969-0
Telefax: +49 (0)7623 / 969-69

E-Mail: info@mueller-gmbh.com
Internet: www.mueller-gmbh.com

MÜLLER®

## FDA- Bestätigung für Silikone

## FDA- Confirmation for silicones

## FDA- Confirmation pour des matières en silicone

Wir bestätigen hiermit, dass die Rohstoffe unserer Silikon-Qualitäten den Richtlinien der BfR XV und der Food and Drug Administration FDA 21 CFR §177.2600, USP Class VI entsprechen.

Die Verarbeitung erfolgt nach den Richtlinien der Rohstoffhersteller.
Sie können als physiologisch unbedenklich gem. FDA eingestuft werden.

We confirm, that the silicone qualities are manufactured from materials which correspond with the BfR XV and the directives from the Food and Drug Administration FDA 21 CFR §177.2600, USP Class VI.

The processing is effected according to the directives of the raw material suppliers.
These articles can physiologically be recognized as safe according FDA.

Nous certifions que les matières premières de nos qualités en silicone correspondent aux directives de BfR XV et de Food and Drug Administration FDA 21 CFR §177.2600, USP Class VI.

Le traitement est effectué selon les directives des fabricants de matières premières.
On peut les classifier physiologiquement comme neutre selon FDA.

Stand/state/état:
11/ 2010

Doc No: 136546-1

**Müller GmbH**
Industrieweg 5
D-79618 Rheinfelden

Systemtechnik in Edelstahl
Behälter / Gehäuse
Handlinggeräte

Qualitätsmanagement
ISO 9001:2008

Telefon: +49 (0)7623 / 969-0
Telefax: +49 (0)7623 / 969-69

E-Mail: info@mueller-gmbh.com
Internet: www.mueller-gmbh.com

MÜLLER®

## USP Class VI - Bestätigung für elektr. leitfähige Silikon-Abdeckungen

## USP Class VI - Confirmation for electroconductive silicones

## USP Class VI - Confirmation pour des matières en silicone

Wir bestätigen hiermit, dass die Rohstoffe unserer Silikon-Abdeckungen USP Class VI entsprechen.

Sie sind geeignet für die Anwendung im medizinisch-technischen und Lebensmittelbereich.

We confirm, that the silicone qualities are manufactured from materials which correspond with USP Class VI.

They are suitable for the use in medical-technical and food processing areas.

Nous certifions que les matières premières de nos qualités en silicone correspondent USP Class VI.

Ils sont propre à l'utilisation dans les domaines medicales-techniques et pour des denrées alimentaires.

Stand/state/état:
09/2009

Your order no.: CDF-11-1729 Part no.: 0821734
Our order no.: VK114347 Drawing no.: 0821734
Pos. no. of order: 4 Pos. no. of drawing: 5

**Doc No: 136549-1**

**Müller GmbH**
Industrieweg 5
D-79618 Rheinfelden

Systemtechnik in Edelstahl
Behälter / Gehäuse
Handlinggeräte

Qualitätsmanagement
ISO 9001:2008

Telefon: +49 (0)7623 / 969-0
Telefax: +49 (0)7623 / 969-69

E-Mail: info@mueller-gmbh.com
Internet: www.mueller-gmbh.com

MÜLLER®

## FDA- Bestätigung für Silikone

## FDA- Confirmation for silicones

## FDA- Confirmation pour des matières en silicone

Wir bestätigen hiermit, dass die Rohstoffe unserer Silikon-Qualitäten den Richtlinien der BfR XV und der Food and Drug Administration FDA 21 CFR §177.2600, USP Class VI entsprechen.

Die Verarbeitung erfolgt nach den Richtlinien der Rohstoffhersteller.
Sie können als physiologisch unbedenklich gem. FDA eingestuft werden.

We confirm, that the silicone qualities are manufactured from materials which correspond with the BfR XV and the directives from the Food and Drug Administration FDA 21 CFR §177.2600, USP Class VI.

The processing is effected according to the directives of the raw material suppliers.
These articles can physiologically be recognized as safe according FDA.

Nous certifions que les matières premières de nos qualités en silicone correspondent aux directives de BfR XV et de Food and Drug Administration FDA 21 CFR §177.2600, USP Class VI.

Le traitement est effectué selon les directives des fabricants de matières premières.
On peut les classifier physiologiquement comme neutre selon FDA.

Stand/state/état:
11/ 2010

**Attestation d'état de surfaces des éléments en contact avec le produit.**

**Bescheinigung der Oberflächenqualität für die produktberührten Elemente.**

**Certificate for surface quality of the parts in contact with the product.**

Selon la méthode de mesure décrite dans la norme EN ISO 4288, nous certifions que les parties en contact avec le produit ont un état de surface conforme à la commande, soit:

Basierend auf die in der Norm EN ISO 4288 beschriebenen Messmethode, bestätigen wir, dass die Oberflächenqualität der produktberührten Teile der Bestellung entspricht, d.h.:

According to the procedure for roughness inspection EN ISO 4288, we guarantee thal all product contact parts have been manufactured with a surface quality according to the order, i.e.:

**Intérieur:** **Innen:** **Inside:**

| Ra ≤ 0.5 µm |
|---|

**Extérieur:** **Aussen:** **Outside:**

| Ra ≤ 1.4 µm |
|---|

**Frewitt Fabrique de Machines SA**

**R. Rybarikova**
Rédactrice technique
Technischer Redaktor
Technical writter

Professional Milling and Handling of Powders

**Client:** **Kunde:** **Customer:**

**NOVARTIS SINGAPORE PHARMACEUTICAL**
**SG-Singapore**

**N° Série:** **Serien-Nr.** **Serial Nr.**
11007821034

465036-CMA

| | |
|---|---|
| Appareil de mesure / Messapparat / Measurin unit | Mitutoyo Suftest SJ-301 |
| N° série / Serien-Nr. / Serial Nr. : | 400197 |
| N° Etalon / Massstab-Nr. / Standard Nr. : | 438330 |

| | | | | | | |
|---|---|---|---|---|---|---|
| Poition de mesure: | | Intérieur | | | Extérieur | |
| Massnahmenposition: | I | = innen | | E | = Aussen | |
| Measure position: | | Inside | | | Outside | |

## DATA - pos. 100 - 465107

| Ref | mesure Massnahme nposition | Mesure N° Mass Nr. Measure Nr. | Norme Norm Stand | Profil Profil Profile | Filtre Filter Filter | Eva.-L Ausw.-L Eva.-L | λC | N | Vitesse Gesch. Speed | Drive Vorschub Drive | Ra |
|---|---|---|---|---|---|---|---|---|---|---|---|
| **Pos.100** | | | | | | | | | | | |
| **465211** | **E** | **1** | ISO1997 | R | GAUSS | 4.0mm | 0.8mm | 5.00 | 0.5mm/s | STAND | **0.33um** |
| **465211** | **E** | **2** | ISO1997 | R | GAUSS | 4.0mm | 0.8mm | 5.00 | 0.5mm/s | STAND | **0.32um** |
| **465211** | **I** | **1** | ISO1997 | R | GAUSS | 4.0mm | 0.8mm | 5.00 | 0.5mm/s | STAND | **0.18um** |
| **465211** | **I** | **2** | ISO1997 | R | GAUSS | 4.0mm | 0.8mm | 5.00 | 0.5mm/s | STAND | **0.26um** |
| **Pos.101** | | | | | | | | | | | |
| **465117** | **E** | **1** | ISO1997 | R | GAUSS | 4.0mm | 0.8mm | 5.00 | 0.5mm/s | STAND | **0.25um** |
| **465117** | **E** | **2** | ISO1997 | R | GAUSS | 4.0mm | 0.8mm | 5.00 | 0.5mm/s | STAND | **0.84um** |
| **465117** | **I** | **1** | ISO1997 | R | GAUSS | 4.0mm | 0.8mm | 5.00 | 0.5mm/s | STAND | **0.35um** |
| **465117** | **I** | **2** | ISO1997 | R | GAUSS | 4.0mm | 0.8mm | 5.00 | 0.5mm/s | STAND | **0.17um** |
| **Pos.102** | | | | | | | | | | | |
| **465214** | **E** | **1** | ISO1997 | R | GAUSS | 4.0mm | 0.8mm | 5.00 | 0.5mm/s | STAND | **0.24um** |
| **465214** | **E** | **2** | ISO1997 | R | GAUSS | 4.0mm | 0.8mm | 5.00 | 0.5mm/s | STAND | **0.27um** |
| **465214** | **I** | **1** | ISO1997 | R | GAUSS | 4.0mm | 0.8mm | 5.00 | 0.5mm/s | STAND | **0.23um** |
| **465214** | **I** | **2** | ISO1997 | R | GAUSS | 4.0mm | 0.8mm | 5.00 | 0.5mm/s | STAND | **0.08um** |
| **Pos.103** | | | | | | | | | | | |
| **465173** | **E** | **1** | ISO1997 | R | GAUSS | 4.0mm | 0.8mm | 5.00 | 0.5mm/s | STAND | **0.47um** |
| **465173** | **E** | **2** | ISO1997 | R | GAUSS | 4.0mm | 0.8mm | 5.00 | 0.5mm/s | STAND | **0.42um** |
| **465173** | **I** | **1** | ISO1997 | R | GAUSS | 4.0mm | 0.8mm | 5.00 | 0.5mm/s | STAND | **0.30um** |
| **465173** | **I** | **2** | ISO1997 | R | GAUSS | 4.0mm | 0.8mm | 5.00 | 0.5mm/s | STAND | **0.08um** |
| **Pos.104** | | | | | | | | | | | |
| **465174** | **E** | **1** | ISO1997 | R | GAUSS | 4.0mm | 0.8mm | 5.00 | 0.5mm/s | STAND | **0.27um** |
| **465174** | **E** | **2** | ISO1997 | R | GAUSS | 4.0mm | 0.8mm | 5.00 | 0.5mm/s | STAND | **0.74um** |
| **465174** | **I** | **1** | ISO1997 | R | GAUSS | 4.0mm | 0.8mm | 5.00 | 0.5mm/s | STAND | **0.07um** |
| **465174** | **I** | **2** | ISO1997 | R | GAUSS | 4.0mm | 0.8mm | 5.00 | 0.5mm/s | STAND | **0.24um** |
| **Pos.105** | | | | | | | | | | | |
| **465165** | **E** | **1** | ISO1997 | R | GAUSS | 4.0mm | 0.8mm | 5.00 | 0.5mm/s | STAND | **0.33um** |
| **465165** | **E** | **2** | ISO1997 | R | GAUSS | 4.0mm | 0.8mm | 5.00 | 0.5mm/s | STAND | **0.36um** |
| **465165** | **I** | **1** | ISO1997 | R | GAUSS | 4.0mm | 0.8mm | 5.00 | 0.5mm/s | STAND | **0.10um** |
| **465165** | **I** | **2** | ISO1997 | R | GAUSS | 4.0mm | 0.8mm | 5.00 | 0.5mm/s | STAND | **0.12um** |
| **Pos.106** | | | | | | | | | | | |
| **417089** | **I** | **1** | ISO1997 | R | GAUSS | 4.0mm | 0.8mm | 5.00 | 0.5mm/s | STAND | **0.18um** |
| **417089** | **I** | **2** | ISO1997 | R | GAUSS | 4.0mm | 0.8mm | 5.00 | 0.5mm/s | STAND | **0.22um** |

| | | | | | | | | | | | |
|---|---|---|---|---|---|---|---|---|---|---|---|
| **Pos.107** | | | | | | | | | | | |
| **465126** | **E** | **1** | ISO1997 | R | GAUSS | 4.0mm | 0.8mm | 5.00 | 0.5mm/s | STAND | **0.69um** |
| **465126** | **I** | **1** | ISO1997 | R | GAUSS | 4.0mm | 0.8mm | 5.00 | 0.5mm/s | STAND | **0.26um** |
| **Pos.108** | | | | | | | | | | | |
| **465076** | **E** | **1** | ISO1997 | R | GAUSS | 4.0mm | 0.8mm | 5.00 | 0.5mm/s | STAND | **0.65um** |
| **465076** | **I** | **1** | ISO1997 | R | GAUSS | 4.0mm | 0.8mm | 5.00 | 0.5mm/s | STAND | **0.21um** |
| **Pos.109** | | | | | | | | | | | |
| **401402** | **I** | **1** | ISO1997 | R | GAUSS | 4.0mm | 0.8mm | 5.00 | 0.5mm/s | STAND | **0.16um** |
| **401402** | **I** | **2** | ISO1997 | R | GAUSS | 4.0mm | 0.8mm | 5.00 | 0.5mm/s | STAND | **0.29um** |

DATA - **pos. 101 - 465220**

| Ref | Positon mesure Massnahmenposition Measure position | Mesure N° Mass Nr. Measure Nr. | Norme Norm Stand | Profil Profil Profile | Filtre Filter Filter | Eva.-L Ausw.-L Eva.-L | λC | N | Vitesse Gesch. Speed | Drive Vorschub Drive | Ra |
|---|---|---|---|---|---|---|---|---|---|---|---|
| **465220** | **E** | **1** | ISO1997 | R | GAUSS | 4.0mm | 0.8mm | 5.00 | 0.5mm/s | STAND | **0.30um** |
| **465220** | **E** | **2** | ISO1997 | R | GAUSS | 4.0mm | 0.8mm | 5.00 | 0.5mm/s | STAND | **0.23um** |
| **465220** | **I** | **1** | ISO1997 | R | GAUSS | 4.0mm | 0.8mm | 5.00 | 0.5mm/s | STAND | **0.09um** |
| **465220** | **I** | **2** | ISO1997 | R | GAUSS | 4.0mm | 0.8mm | 5.00 | 0.5mm/s | STAND | **0.10um** |

**Protocole établi par (visa)** **le**
**Protokoll erstellt von (Visa)** U.SCHALLER **am** 01.09.11
**Report established by (Visa)** **on**

| | |
|---|---|
| Projet / Projekt / Project: | PRO-11-0078 |
| Type / Typ / Type : | MF-3 |
| N° de série / Serien Nr. / Serial Nr.: | 11007821034 / 11007835099 |
| Client / Kunde / Customer : | Novartis Pharmaceutical Manufacturing ; SG-Singapore |

**Used seals (FDA-conform)**

Gylon ( PTFE), EPDM, FEP-O-SEAL, Silikon, Ecoflon5

**Remarques / Bemerkungen / Remarks:**

We confirm that the seals that are used by Novartis are resistant to the used cleaning agents. .....



Professional Milling and Handling of Powders

ZERTIFIKAT ◆ CERTIFICATE ◆ 認証証書 ◆ СЕРТИФИКАТ ◆ CERTIFICADO ◆ CERTIFICAT

**Doc No: 127802-1**

Product Service

# ZERTIFIKAT

**Nr. Z2 06 09 13277 076**

**Zertifikatsinhaber:** **Festo AG & Co. KG**
Ruiter Str. 82
73734 Esslingen
DEUTSCHLAND

**Produktions-stätte(n):** 49331

**Prüfzeichen:**

**Produkt:** **Pneumatikschlauchleitungen**

**Modell(e):** **PUN-H-Schläuche**
**PUN-H-DUO**

**Kenndaten:**

| | |
|---|---|
| Größen mm: | 3x0,5 / 4x0,75 / 6x1 / 8x1,25<br>10x1,5 / 12x2 / 16x2,5<br>DUO 4x0,75 / 6x1 / 8x1,25 / 10x1,5 |
| Farben: | natur, blau, schwarz;<br>DUO blau/schwarz |
| Material: | Polyurethan |
| Einsatztemperatur: | bis 60°C |
| Einsatzbereich: | nicht geeignet für Nahrungsmittel<br>mit Alkoholanteil > 15 % |

**Geprüft nach:**
DIN EN 1672-2:2005
2002/72/EG
PPP 57006:2004
Code of Federal Regulations
Title 21 (FDA) § 177.2600, § 178.2010

Das Produkt wurde auf freiwilliger Basis auf die Einhaltung der grundlegenden Anforderungen geprüft und kann mit dem oben abgebildeten Prüfzeichen gekennzeichnet werden. Eine Veränderung der Darstellung des Prüfzeichens ist nicht erlaubt. Umseitige Hinweise sind zu beachten.

**Prüfbericht Nr.:** 71300186-001

**Datum,** 2006-10-13

255228



TÜV SÜD Product Service GmbH · Zertifizierstelle · Ridlerstrasse 65 · 80339 München · Germany

FREWITT

**CERTIFICAT / ZERTIFIKAT / CERTIFICATE**
**MESURE DU BRUIT**
**LÄRMMASSNAHME**
**NOISE MEASURE**

**11**

**Client:** **Kunde:** **Customer:**

**NOVARTIS SINGAPORE PHARMACEUTICAL**
**SG-Singapore**

**N° Série:** **Serien-Nr.** **Serial Nr.**
**11007821034**

| | |
|---|---|
| Appareil de mesure / Messapparat / Measurin unit : | TES 1350 |
| N° série / Serien-Nr. / Serial Nr. : | 971205674 |
| Norme / Norm / Standard : | dBA (DIN45635) |

| Conditions de mesure | Messbedingungen | Measuring conditions |
|---|---|---|
| La mesure est faite:<br>- à 1m<br>- à hauteur de la chambre de broyage<br>- à vitesse max.<br>- avec l'outillage monté<br>- avec les accessoires montés<br>- à vide (sans produit) | Die Messung wird gemacht:<br>- bei einer Distanz von 1 m<br>- auf Mahlkammerhöhe<br>- mit maximaler Geschwindigkeit<br>- mit montiertem Werkzeug<br>- mit montiertem Ein- und Auslaufzubehör | Measurement is made:<br>- at a distance of 1 m<br>- at height of milling chamber<br>- with maximum speed<br>- with installed tools<br>- with installed inlet and outlet accessories |

**Lp [dBA] : 39.80**

| | | | | |
|---|---|---|---|---|
| **Protocole établi par (visa)**<br>**Protokoll erstellt von (Visa)**<br>**Report established by (Visa)** | Urs Schaller | | **le**<br>**am**<br>**on** | 01.09.11 |

# Speed calibration

**11**

**Client :** **Kunde :** **Customer :**

**Novartis Pharma SG-Singapore**

**N° série :** **Serien Nr. :** **Serial Nr. :**

11007821034

| | **Afficheur** *1)* | | **Mesures** | | **Remarques** |
|---|---|---|---|---|---|
| | *Display 1)* | | *Messungen* | | *Bemerkunge* |
| | *Display 1)* | | *Measurements* | | *Remarks* |
| **Pos.** **Volant** *Handrad Handwheel 2)* | **Vitesse** *Geschwindigkeit Speed* **1/min** | **Fréquence** *Frequenz frequency 3)* **Hz** | **Vitesse** *Geschwindigkeit Speed 4)* **Osc./min.** **1/min** **±10%** 2) **±5%** 1) | **Courant** *Strom Current 5)* **A** | *1) Seulement machine avec afficheur* *Nur Maschinen mit Display* *Only machines with a Display* *2) Seulement machine avec volant* *Nur Maschinene mit Handrad* *Only machines with a handwheel* *3) Seul. machine avec conv. de fréq.* *Nur Maschinen mit FU* *Only machines with frequency inverter* |
| | | | | | |
| 0 | 43 | | 43.36 | 0.28 | |
| 1 | 43 | | 43.36 | | |
| 2 | 60 | | 60.33 | | |
| 3 | 74 | | 74.5 | | |
| 4 | 93 | | 93.05 | | |
| 5 | 107 | | 106.8 | | |
| 6 | 126 | | 125.9 | | |
| 7 | 143 | | 143.5 | | |
| 8 | 160 | | 160.4 | | |
| 9 | 181 | | 180.8 | | |
| 10 | 189 | | 189.3 | 0.63 | |
| | | | | | |
| | | | | | |
| | | | | | |
| | | | | | |
| | | | | | |
| | | | | | |
| | | | | | |

4) Valeurs mesurées avec tachymètre "Jaquet type DHO 907"
mit Tachymeter "Jaquet Typ DHO 907 gemessene Werte - values measured with tachmeter "Jaquet type DHO 907"

5) Valeurs mesurées avec multimètre "Fluke 87 True RMS"
mit Multimeter "Fluke 87 True RMS " gemessene Werte - values measured with multimeter "Fluke 87 True RMS"

**Protocole établi par (visa)** Urs Schaller **le** 01.09.2011
*Protokoll erstellt von (Visa)* *am*
*Report established by (Visa)* *on*

Voir documents suivants. Siehe folgende Dokumente. See following documents

Professional Milling and Handling of Powders

Schweizerische Eidgenossenschaft
Confédération suisse
Confederazione Svizzera
Confederaziun svizra

Département fédéral de justice et police DFJP
**Office fédéral de métrologie METAS**

**Doc No: 17389-3**
**ID No: 305**

# Certificat d'étalonnage No 258-11539

| | |
|---|---|
| *Objet* | **Compte-tours**<br>Jaquet, DHO 907<br>N° 0606.214692, METAS 411967 |
| *Mandat* | Étalonnage d'un compte-tours |
| *Requérant* | Frewitt Fabrique de Machines SA<br>Route du Coteau 7<br>1763 Granges-Paccot |
| *Traçabilité* | Les résultats de mesure indiqués sont rattachés aux étalons nationaux et ainsi à des réalisations reconnues au niveau international des unités SI. |
| *Date de l'étalonnage* | 29.06.2009 |
| *Marquage* | Marque d'étalonnage METAS 06/09 |

CH-3003 Bern-Wabern, le 29. juin 2009

Pour les mesurages

Ewald Brülhart

Section trafic, acoustique et vibration

Walter Fasel, Chef de section

La reproduction de ce document n'est autorisée que dans sa forme intégrale.



METAS
Lindenweg 50, CH-3003 Bern-Wabern, Tel. +41 31 32 33 111, www.metas.ch

# Certificat d'étalonnage No 258-11539

## Portée de l'étalonnage

Le compte-tours a été étalonné dans l'étendue de mesure de 10 à 100'000 t/min.

## Méthode de mesure

Le compte-tours a été contrôlé optiquement avec les impulsions lumineuses d'une source lumineuse de référence.

## Conditions de mesure

Température ambiante: (22 ± 2) °C.

## Résultats de mesure

| Nombre tours | Déviation | Incertitude |
|---|---|---|
| t/min | t/min | t/min |
| **12** | -0.005 | ± 0.007 |
| **48** | -0.005 | ± 0.007 |
| **96** | 0.000 | ± 0.008 |
| **120** | -0.05 | ± 0.07 |
| **480** | 0.02 | ± 0.09 |
| **960** | 0.03 | ± 0.08 |
| **1200** | -0.3 | ± 0.8 |
| **4800** | 0.2 | ± 0.8 |
| **9600** | 0.7 | ± 0.8 |
| **12000** | 1.3 | ± 0.8 |
| **48000** | -2.0 | ± 1.7 |
| **96000** | -4.0 | ± 3.7 |

Les valeurs indiquées représentent la moyenne de 6 mesures.
Un graphique détaillé se trouve dans l'appendice.

Le **diamètre de la roue de mesure** est: **48.46 ± 0.1 mm**

La reproduction de ce document n'est autorisée que dans sa forme intégrale.



METAS
Lindenweg 50, CH-3003 Bern-Wabern, Tel. +41 31 32 33 111, www.metas.ch

## Certificat d'étalonnage No 258-11539

### Incertitude de mesure

L'incertitude de mesure indiquée est obtenue en multipliant l'incertitude-type composée par un facteur d'élargissement $k = 2$. La valeur mesurée ($y$) et son incertitude élargie ($U$) définissent le domaine ($y \pm U$) dans lequel la valeur de la grandeur mesurée se trouve avec une probabilité d'environ 95%. L'estimation de l'incertitude est conforme aux directives de l'ISO (GUM:1995).

L'incertitude estimée contient les contributions de l'étalon utilisé, de la procédure d'étalonnage, des conditions d'environnement et de l'objet étalonné. Il n'a pas été tenu compte du comportement à long terme de l'objet étalonné.

La reproduction de ce document n'est autorisée que dans sa forme intégrale.



METAS
Lindenweg 50, CH-3003 Bern-Wabern, Tel. +41 31 32 33 111, www.metas.ch

Modèle: **Jaquet** Typ: **DHO 907** N° Metas: **411967** N° Serie: **606.214692**

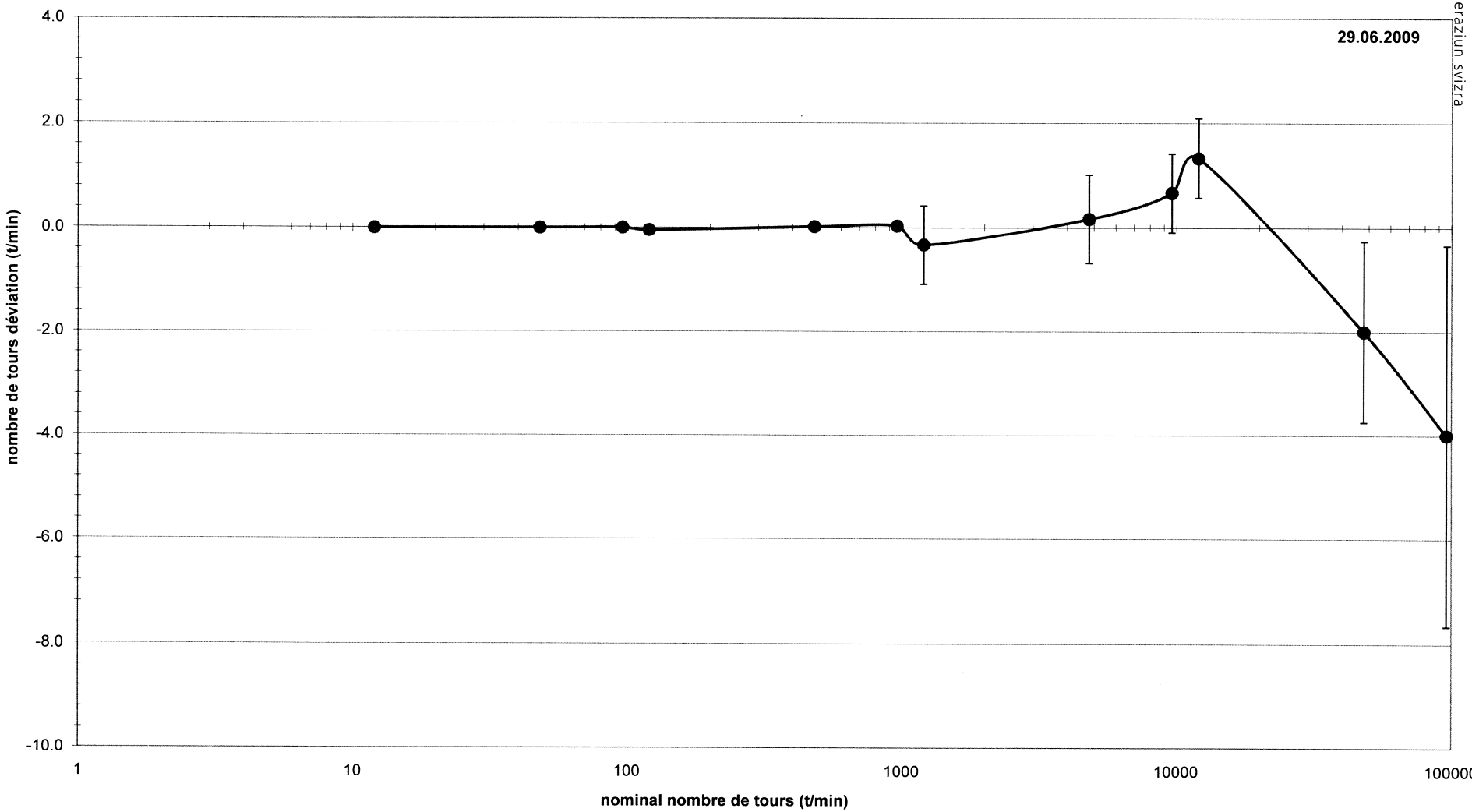


Schweizerische Eidgenossenschaft
Confédération suisse
Confederazione Svizzera
Confederaziun svizra

**Swiss Federal Office of Metrology METAS**
Lindenweg 50, CH-3003 Bern-Wabern
Section Traffic, Phone: +41 31 32 33 111, Fax: +41 31 32 33 210

Print date: 29.06.2009

French version only

| FREWITT | Formulaire : **Equipements de test et de mesure** | |
|---|---|---|
| **MANUEL DE MANAGEMENT** | Document: 23806-3-fr.doc P4 /Contrôle du: 22.04.09 | Page : 1 de 2 |

| | | | |
|---|---|---|---|
| **N° appareil N° :** | 305 | Catégorie : | Force |
| N° article Frewitt : | 426113 | Service utilisateur : | C ontrôle |
| Désignation : | Tachymètre | Constructeur : | Jaquet |
| Type : | DHO 907 Combi | Vendeur : | Jaquet AG - 4009 Bâle |
| N° de série : | 214692 | Année d'achat : | 2006 |
| Plage(s) : | 10 - 10000 T/min | Prix d'achat : | 370 CHF |
| Tolérance (s) : | + - 1 % | | |

**Etalonnage interne**

Périodicité : mois

Procédure de contrôle :

**Etalonnage externe**

Périodicité : 36 mois

Effectué chez : Office fédéral de la métrologie - 3003 Berne-Wabern.

Procédure de contrôle :

Etalonnage entre 10 et 96000 T/min standard. Au laboratoire trafic, à l'att. de Mr. Fasel Walter.

**Type de contrôle:** Ctrl externe | (si ext.) **Certificat reçu :** OUI | **Equipement conforme :** OUI

| Mesure de référence | Mesure effective | Mesure après correction | Conforme ? |
|---|---|---|---|
| mm | mm | mm | ? |
| mm | mm | mm | ? |
| mm | mm | mm | ? |

| Date du ctrl | Contrôleur N° | Vi sa |
|---|---|---|
| 29/06/09 | 41 | Hre |

**Remarque :**

**Type de contrôle:** ? | (si ext.) **Certificat reçu :** ? | **Equipement conforme :** ?

| Mesure de référence | Mesure effective | Mesure après correction | Conforme ? |
|---|---|---|---|
| mm | mm | mm | ? |
| mm | mm | mm | ? |
| mm | mm | mm | ? |

| Date du ctrl | Contrôleur N° | Visa |
|---|---|---|
| | | |

**Remarque :**

**Type de contrôle:** ? | (si ext.) **Certificat reçu :** ? | **Equipement conforme :** ?

| Mesure de référence | Mesure effective | Mesure après correction | Conforme ? |
|---|---|---|---|
| mm | mm | mm | ? |
| mm | mm | mm | ? |
| mm | mm | mm | ? |

| Date du ctrl | Contrôleur N° | Vi sa |
|---|---|---|
| | | |

**Remarque :**

| **Type de contrôle:** ? | (si ext.) **Certificat reçu :** ? | **Equipement conforme :** ? |
|---|---|---|

| **Mesure de référence** | **Mesure effective** | **Mesure après correction** | **Conforme ?** | **Date du ctrl** | **Contrôleur N°** | **Vi sa** |
|---|---|---|---|---|---|---|
| mm | mm | mm | ? | | | |
| mm | mm | mm | ? | **Remarque** : | | |
| mm | mm | mm | ? | | | |

| **Type de contrôle:** ? | (si ext.) **Certificat reçu :** ? | **Equipement conforme :** ? |
|---|---|---|

| **Mesure de référence** | **Mesure effective** | **Mesure après correction** | **Conforme ?** | **Date du ctrl** | **Contrôleur N°** | **Visa** |
|---|---|---|---|---|---|---|
| mm | mm | mm | ? | | | |
| mm | mm | mm | ? | **Remarque** : | | |
| mm | mm | mm | ? | | | |

| **Type de contrôle:** ? | (si ext.) **Certificat reçu :** ? | **Equipement conforme :** ? |
|---|---|---|

| **Mesure de référence** | **Mesure effective** | **Mesure après correction** | **Conforme ?** | **Date du ctrl** | **Contrôleur N°** | **Vi sa** |
|---|---|---|---|---|---|---|
| mm | mm | mm | ? | | | |
| mm | mm | mm | ? | **Remarque** : | | |
| mm | mm | mm | ? | | | |

| **Type de contrôle:** ? | (si ext.) **Certificat reçu :** ? | **Equipement conforme :** ? |
|---|---|---|

| **Mesure de référence** | **Mesure effective** | **Mesure après correction** | **Conforme ?** | **Date du ctrl** | **Contrôleur N°** | **Visa** |
|---|---|---|---|---|---|---|
| mm | mm | mm | ? | | | |
| mm | mm | mm | ? | **Remarque** : | | |
| mm | mm | mm | ? | | | |

| **Type de contrôle:** ? | (si ext.) **Certificat reçu :** ? | **Equipement conforme :** ? |
|---|---|---|

| **Mesure de référence** | **Mesure effective** | **Mesure après correction** | **Conforme ?** | **Date du ctrl** | **Contrôleur N°** | **Vi sa** |
|---|---|---|---|---|---|---|
| mm | mm | mm | ? | | | |
| mm | mm | mm | ? | **Remarque** : | | |
| mm | mm | mm | ? | | | |

# Certificate of Calibration

*Doc No: 17395-4*
*ID No: 111*

**N° de Certificat :** S - 110802-1R

Servilec

Nous attestons que l'instrument ci-dessous atteint ou dépasse les spécifications électriques publiées par le fabricant, sur tous les points mesurés. Toutes les mesures sont traçables par des standards nationaux ou internationaux, ou ont été dérivées par une technique approuvée.

We certify that the below instrument meets or exceeds the manufacturers published electrical specifications at the points tested. All measurement are traceable to national or international standards or have been derived by approved ratio technique.



## CALIBRATION INFORMATION

| | |
|---|---|
| **Type** / *Model*: | FLUKE 87 |
| **N° de série** / *Serial Number:* | 60321248 |
| **N° d'inventaire** / *Asset Number:* | 111 |
| **Client** / *Customer :* | FREWITT SA |
| **N° de Commande** / *Work Order :* | 11-160 |
| **Date de l'étalonnage:** | 2 août 2011 |

## STANDARDS USED FOR CALIBRATION

| Asset Number | Description | Cal. Date | Due Date |
|---|---|---|---|
| s2001 | Fluke 5520A Multi product calibrator | 28 mars 2011 | 28 mars 2012 |

Renato Ricci

Signed:

Servilec SA - 27 Av de Vaudagne - 1217 Meyrin - www.servilec.ch
Tél 41 22 785 23 03 Fax 41 22 785 23 13 info@servilec.ch

# Report of Calibration

## Servilec SA

| | |
|---|---|
| UNIT UNDER TEST: | FLUKE 87 |
| SERIAL NUMBER : | 60321248 |
| ASSET NUMBER : | 111 |
| CERTIFICATE N° : | S-110802-1R |
| CUSTOMER : | FREWITT SA |
| TEMPERATURE : | (23 +/- 3) °C |
| HUMIDITY : | less than 70% |
| TEST RESULT : | PASS |
| PERFORMED ON : | 02.08.2011 |
| CALIBRATED BY : | Renato Ricci |

Servilec

REMARKS:



### Standards Used

| Asset | Description | Cal Date | Due Date |
|---|---|---|---|
| s2001 | Fluke 5520A Multi product calibrator | 28.mars 2011 | 28.mars 2012 |

### Test Data

| Test | Parameter | Unit Under Test Reading | Unit Under Test Tolerance | Unit Under Test UUT Error | ERROR in (% of TOL) | User |
|---|---|---|---|---|---|---|
| DISPLAY TEST | | | | | | |
| Result of Operator Evaluation | | | | | | Pass |
| AC VOLTAGE TESTS | | | | | | |
| 400mV Range | | | | | | |
| 2 | 350.0 mV @ 60 Hz | 349.0mV | 2.90mV | -0.286% | 35% | Pass |
| 3 | 350.0 mV @ 1 kHz | 349.2mV | 3.90mV | -0.229% | 21% | Pass |
| 4 | 350.0 mV @ 5 kHz | 346.8mV | 7.40mV | -0.914% | 43% | Pass |
| 5 | 350.0 mV @ 20 kHz | 349.4mV | 9.00mV | -0.171% | 7% | Pass |
| 4V Range | | | | | | |
| 6 | 3.500 V @ 60 Hz | 3.492V | 27.00mV | -0.229% | 30% | Pass |
| 7 | 3.500 V @ 1 kHz | 3.490V | 39.00mV | -0.286% | 26% | Pass |
| 8 | 3.500 V @ 5 kHz | 3.465V | 74.00mV | -1.00% | 47% | Pass |
| 9 | 3.500 V @ 20 kHz | 3.468V | 90.00mV | -0.914% | 36% | Pass |
| 40V Range | | | | | | |
| 10 | 35.00 V @ 60 Hz | 34.92V | 270.00mV | -0.229% | 30% | Pass |
| 11 | 35.00 V @ 1 kHz | 34.98V | 390.00mV | -571ppm | 5% | Pass |
| 12 | 35.00 V @ 5 kHz | 34.94V | 740.00mV | -0.171% | 8% | Pass |

| Test | Parameter | Unit Under Test — Reading | Tolerance | UUT Error | ERROR in (% of TOL) | User |
|---|---|---|---|---|---|---|
| 13 | 35.00 V @ 20 kHz | 34.90V | 900.00mV | -0.286% | 11% | Pass |
| 400V Range | | | | | | |
| 14 | 350.0 V @ 60 Hz | 349.2V | 2.70V | -0.229% | 30% | Pass |
| 15 | 350.0 V @ 1 kHz | 349.9V | 3.90V | -286ppm | 3% | Pass |
| 16 | 350.0 V @ 5 kHz | 349.4V | 7.40V | -0.171% | 8% | Pass |
| 17 | 100.0 V @ 20 kHz | 99.5V | 4.00V | -0.500% | 13% | Pass |
| 18 | 200.0 V @ 20 kHz | 199.8V | 6.00V | -0.100% | 3% | Pass |
| 19 | 300.0 V @ 20 kHz | 299.7V | 8.00V | -0.100% | 4% | Pass |
| 20 | 350.0 V @ 10 kHz | 348.5V | 9.00V | -0.429% | 17% | Pass |
| 1000V Range | | | | | | |
| 21 | 900 V @ 60 Hz | 903V | 8.00V | 0.333% | 38% | Pass |
| 22 | 900 V @ 1 kHz | 904V | 13.00V | 0.444% | 31% | Pass |
| 23 | 900 V @ 5 kHz | 903V | 22.00V | 0.333% | 14% | Pass |
| FREQUENCY TESTS | | | | | | |
| 19.999kHz Range | | | | | | |
| 24 | 19.000 kHz @ 150 mV | 18.999kHz | 2.00Hz | -52.6ppm | 50% | Pass |
| 199.99kHz Range | | | | | | |
| 25 | 190.00 kHz @ 150 mV | 189.99kHz | 20.00Hz | -52.6ppm | 50% | Pass |
| DC VOLTAGE TESTS | | | | | | |
| 4V Range | | | | | | |
| 26 | 3.500 V | 3.501V | 5.00mV | 286ppm | 20% | Pass |
| 40V Range | | | | | | |
| 27 | 35.00 V | 35.01V | 50.00mV | 286ppm | 20% | Pass |
| 28 | -35.00 V | -35.00V | 50.00mV | 0.00ppm | 0% | Pass |
| 400V Range | | | | | | |
| 29 | 350.0 V | 350.1V | 500.00mV | 286ppm | 20% | Pass |
| 1000V Range | | | | | | |
| 30 | 1000 V | 1001V | 2.00V | 0.100% | 50% | Pass |
| DC MILLIVOLT TEST | | | | | | |
| 400mV Range | | | | | | |
| 31 | 350.0 mV | 350.1mV | 500.00uV | 286ppm | 20% | Pass |
| RESISTANCE TESTS | | | | | | |
| 400 Ohm Range | | | | | | |
| 32 | 190.0 Ohm | 190.1Ohm | 500.00mOhm | 526ppm | 20% | Pass |
| 40 kOhm Range | | | | | | |
| 33 | 19.00 kOhm | 19.00kOhm | 50.00Ohm | 0.00ppm | 0% | Pass |
| 4 MOhm Range | | | | | | |
| 34 | 1.900 MOhm | 1.903MOhm | 5.00kOhm | 0.158% | 60% | Pass |
| 40 MOhm Range | | | | | | |
| 35 | 19.00 MOhm | 19.03MOhm | 220.00kOhm | 0.158% | 14% | Pass |
| CONDUCTANCE TEST | | | | | | |
| 40nS Range | | | | | | |
| 36 | 10.00 nS | 9.96nS | 200.00pS | -0.400% | 20% | Pass |

| Test | Parameter | Unit Under Test Reading | Tolerance | UUT Error | ERROR in (% of TOL) | User | |
|---|---|---|---|---|---|---|---|
| CAPACITANCE TESTS | | | | | | | |
| 5.00uF Range | | | | | | | |
| 37 | 1.00 µF | 0.98µF | 30.00nF | -2.00% | 67% | Pass | |
| 0.500uF Range | | | | | | | |
| 38 | 0.470 µF | 0.468µF | 7.00nF | -0.426% | 29% | Pass | 3.22 |
| 0.0500uF Range | | | | | | | |
| 39 | 0.0470 µF | 0.0471µF | 700.00pF | 0.213% | 14% | Pass | 3.22 |
| DIODE TEST | | | | | | | |
| 40 | 3.000 V | 2.990V | 61.00mV | -0.333% | 16% | Pass | |
| DC MILLIAMP TESTS | | | | | | | |
| DC MILLIAMP TESTS | | | | | | | |
| 40mA Range | | | | | | | |
| 40mA Range | | | | | | | |
| 41 | 35.00 mA | 35.02mA | 90.00uA | 571ppm | 22% | Pass | |
| 400mA Range | | | | | | | |
| 42 | 350.0 mA | 350.0mA | 900.00uA | 0.00ppm | 0% | Pass | |
| AC MILLIAMP TESTS | | | | | | | |
| 40mA Range | | | | | | | |
| 43 | 35.00 mA @ 60 Hz | 34.95mA | 370.00uA | -0.143% | 14% | Pass | |
| 44 | 35.00 mA @ 1 kHz | 35.00mA | 370.00uA | 0.00ppm | 0% | Pass | |
| 400mA Range | | | | | | | |
| 45 | 350.0 mA @ 60 Hz | 349.8mA | 3.70mA | -571ppm | 5% | Pass | |
| 46 | 350.0 mA @ 1 kHz | 350.2mA | 3.70mA | 571ppm | 5% | Pass | |
| DC MICROAMP TESTS | | | | | | | |
| 400uA Range | | | | | | | |
| 47 | 350.0 µA | 350.1µA | 1.00uA | 286ppm | 10% | Pass | |
| 4000uA Range | | | | | | | |
| 48 | 3500 µA | 3499µA | 9.00uA | -286ppm | 11% | Pass | |
| AC MICROAMP TESTS | | | | | | | |
| 400uA Range | | | | | | | |
| 49 | 350.0 µA @ 60 Hz | 349.4µA | 3.70uA | -0.171% | 16% | Pass | |
| 50 | 350.0 µA @ 1 kHz | 349.9µA | 3.70uA | -286ppm | 3% | Pass | |
| 4000uA Range | | | | | | | |
| 51 | 3500 µA @ 60 Hz | 3495µA | 37.00uA | -0.143% | 14% | Pass | |
| 52 | 3500 µA @ 1 kHz | 3499µA | 37.00uA | -286ppm | 3% | Pass | |
| DC AMP TESTS | | | | | | | |
| 4000mA Range | | | | | | | |
| 53 | 3500 mA | 3500mA | 9.00mA | 0.00ppm | 0% | Pass | 4.00 |
| 10A Range | | | | | | | |
| 54 | 10.00 A | 10.00A | 40.00mA | 0.00ppm | 0% | Pass | |
| AC AMP TESTS | | | | | | | |
| 4000mA Range | | | | | | | |
| 55 | 3500 mA @ 60 Hz | 3496mA | 37.00mA | -0.114% | 11% | Pass | |

| Test | Parameter | --------- Unit Under Test --------- Reading | Tolerance | UUT Error | ERROR in (% of TOL) | User |
|---|---|---|---|---|---|---|
| 56 | 3500 mA @ 1 kHz | 3500mA | 37.00mA | 0.00ppm | 0% | Pass |
| 10A Range | | | | | | |
| 57 | 10.00 A @ 60 Hz | 10.05A | 120.00mA | 0.500% | 42% | Pass |
| 58 | 10.00 A @ 1 kHz | 10.05A | 120.00mA | 0.500% | 42% | Pass |

**End of Test Data**

**Servilec SA** 27 Av de Vaudagne 1217 Meyrin CH http://www.servilec.ch
Tél 41 22 785 23 03 Fax 41 22 785 23 13 e-mail info@servilec.ch

# ELS-ELEKTRONIK GmbH

KALIBRIER- UND KUNDENSERVICE

**S** Schweizerischer Kalibrierdienst
**C** Service suisse d'étalonnage
**S** Swiss Calibration Service

EN ISO/IEC 17025

Vom Bundesamt für Metrologie und Akkreditierung akkreditierte Kalibrierstelle
Calibration Laboratory accredited by the Swiss Federal Office of Metrologie and Accreditation

Akkr. Nr. **042**

**The Swiss Accreditation Service is one of the signatories to the EA Multilateral Agreement for the recogition of calibration certificates**

Auftragsnummer: Order number: **6578**

Zertifikat Nr.: Certificate nr.: **3073**

## Kalibrier-Zertifikat
## Certificate of Calibration



Gegenstand: Object: Sicherheitstester

***Doc No: 17400-1***
***ID No: 307***

Hersteller: Manufacturer: GMC

Typ: Model: Profitest 204

Ident. Nummer: Ident. number: 5522 8968

Auftraggeber: Customer: GMC-Instruments Schweiz AG 8052 Zürich

Bemerkungen: Remarks: Kalibration gemäss Messprotokoll. Sämtliche Messwerte liegen innerhalb der spezifizierten Toleranzen.

Datum der Kalibrierung: 04.09.07
Date of calibration:

ELS-Elektronik GmbH
CH-8165 Schöfflisdorf
Datum / Date:

4. September 2007

Leiter der Kalibrierstelle:
Head of Calibration Laboratory:

K. Haus

Dieses Kalibrierzertifikat darf ohne die schriftliche Zustimmung des Laboratoriums nicht auszugsweise vervielfältigt werden. Messresultate, Messunsicherheiten mit Vertrauensbereich und Messverfahren sind auf den folgenden Seiten aufgeführt und sind Teil dieses Zertifikates. Dieses Kalibrierzertifikat dokumentiert die Rückführbarkeit auf nationale Normale zur Darstellung der physikalischen Einheiten (SI).

This calibration certificate shall not be reproduced except in full, without written approval of the laboratory. The measurements, the uncertainties with confidence probability and calibrations methods are given on the following pages and are part of the certificate. This calibration certificate documents the traceability to national standards, which realize the physical units of measurements (SI).

Auftragsnummer: **6578**
Order number:

Zertifikat Nr.: **3073**
Certificate nr.:

**Kalibrierresultate / Calibration Results:**

Die angegebene erweiterte Messunsicherheit ist die Standardunsicherheit der Messung multipliziert mit einem Erweiterungsfaktor k = 2, was für eine Normalverteilung einem Vertrauensniveau von etwa 95 % entspricht.

The reported expanded uncertainty of measurement is stated as the standard uncertainty of measurement multiplied by the coverage factor k = 2, which for a normal distribution corresponds to a coverage probability of approximately 95 %.

**Test Conditions:** Lab temperature 23°C ± 1°C, relative humidity 45 ± 5 %

Object: Sicherheitstester
Manufacturer: GMC
Model: Profitest 204
Ident. number: 5522 8968

**Measurement Instruments used:**

| Manufacturer / Model | Ident. number | last calibration |
|---|---|---|
| Multimeter Metraport 32 S (HV DC) | KK7398 | 30.08.07 |
| HV - Adapter 15 kVDC, Ri 20 GOhm | ELS 990108 | 30.08.07 |
| Ref. Resistor 15 k - 100 MOhm | ELS 040312 | 01.06.07 |
| Ref. Resistor 3 x 0,1 Ohm | ELS 951111 | 25.01.07 |
| Ref. Resistor 20 - 100 MOhm | ELS 950828 | 24.10.06 |
| Multimeter Fluke 187 | 90730130 | 05.04.07 |
| Calibrator Fluke 5500 A | 6425024 | 13.08.07 |

Auftragsnummer: **6578**
Order number:

Zertifikat Nr.: **3073**
Certificate nr.:

| Angelegter Wert | Anzeige Prüfling | Dim. | Freq. | Bereich | Abweichung | Messunsicherheit | Test |
|---|---|---|---|---|---|---|---|
| **Schutzleitertest** | | | | | | | |
| I gemessen an 0.096 Ohm: 12.9 Aac | | | | | | 1.2E-02 | OK |
| 0.2848 | 0.286 | Ohm | 50 Hz | | 0.42% | 4.1E-03 | OK |
| gut /schlecht Anzeige | | | | | | | OK |
| **Isolationsprüfung, U = 100 V DC, U gemessen an 10 MOhm :** 126 Vdc | | | | | | 1.6E-02 | OK |
| 1.001 | 1.00 | MOhm | DC | 100 V | -0.10% | 1.2E-02 | OK |
| 10.09 | 10.1 | | | | 0.15% | 1.1E-02 | OK |
| 90.34 | 92.4 | | | | 2.28% | 2.0E-03 | OK |
| **Isolationsprüfung, U = 250 V DC, U gemessen an 10 MOhm :** 292 Vdc | | | | | | 6.9E-03 | OK |
| 1.001 | 1.00 | MOhm | DC | 250 V | -0.10% | 1.2E-02 | OK |
| 10.07 | 10.0 | | | | -0.72% | 1.2E-02 | OK |
| 90.34 | 91.5 | | | | 1.28% | 1.5E-03 | OK |
| **Isolationsprüfung, U = 500 V DC, U gemessen an 10 MOhm :** 571 Vdc | | | | | | 3.7E-03 | OK |
| 1.001 | 1.00 | MOhm | DC | 500 V | -0.10% | 1.2E-02 | OK |
| 10.07 | 10.1 | | | | 0.27% | 1.1E-02 | OK |
| 90.34 | 90.1 | | | | -0.27% | 1.5E-03 | OK |
| **Isolationsprüfung, U = 1000 V DC, U gemessen an 20 GOhm :** 1204 Vdc | | | | | | 1.9E-03 | OK |
| 1.001 | 1.00 | MOhm | DC | 1000 V | -0.10% | 1.2E-02 | OK |
| 10.07 | 10.0 | | | | -0.72% | 1.2E-02 | OK |
| 90.33 | 90.3 | | | | -0.03% | 2.0E-03 | OK |
| gut /schlecht Anzeige | | | | | | | OK |
| **Ableitstromprüfung** | | | | | | | |
| 1.00 | 1.01 | mA | 50 Hz | | 1.00% | 1.3E-02 | OK |
| 1.50 | 1.51 | | | | 0.67% | 8.4E-03 | OK |
| 2.00 | 2.02 | | | | 1.00% | 6.3E-03 | OK |
| 2.50 | 2.52 | | | | 0.80% | 5.1E-03 | OK |
| 5.00 | 5.02 | | | | 0.40% | 2.6E-03 | OK |
| gut /schlecht Anzeige | | | | | | | OK |

Auftragsnummer: **6578**
Order number:

Zertifikat Nr.: **3073**
Certificate nr.:

| Angelegter Wert | Anzeige Prüfling | Dim. | Freq. | Bereich | Abweichung | Messunsicherheit | Test |
|---|---|---|---|---|---|---|---|
| **Spannungsmessung** | | | | | | | |
| 115.0 | 115 | V | DC | | 0.00% | 1.0E-02 | OK |
| 230.0 | 229 | | | | -0.43% | 5.0E-03 | OK |
| 400.0 | 398 | | | | -0.50% | 2.9E-03 | OK |
| 1000.0 | 995 | | | | -0.50% | 1.2E-03 | OK |
| 115.0 | 115 | V | 50 Hz | | 0.00% | 1.0E-02 | OK |
| 230.0 | 230 | | | | 0.00% | 5.1E-03 | OK |
| 400.0 | 400 | | | | 0.00% | 3.0E-03 | OK |
| 1000.0 | 999 | | | | -0.10% | 1.3E-03 | OK |
| **Frequenzmessung** | | | | | | | |
| 50.0 | 50.0 | Hz | | | 0.00% | 2.3E-03 | OK |
| 60.0 | 60.0 | | | | 0.00% | 1.9E-03 | OK |
| 400.0 | 400 | | | | 0.00% | 2.9E-03 | OK |

FREWITT

Certificat de calibration spectromètre Niton
Kalibrierungszertifikat Niton
Calibration Certificate Niton


***Doc No: 21326-2***
***ID No: 410***

**Fournisseur** **Frewitt**

**Notre cde:**

**V/référence:** **410**

**Article No.**

**Description:** **Etalonnage du spectromètre**

Appareil de mesure / Messapparat / Measurin unit : Niton XLt 898 W Y Alloy Analizer
N° série / Serien-Nr. / Serial Nr. : 8251
N° Certificat / Zertifikat-Nr. / Certificate Nr. : 35EN-04292005-IARM-P

No art. / Art Nr. / Art. ID: 2011 Dessin / Zeichnung / Drawing:

| No art. / Art Nr. / Art. ID: 1 | Matière Material Material | % | | | | | | | | | | | | | | | | | | | | |
|---|---|---|---|---|---|---|---|---|---|---|---|---|---|---|---|---|---|---|---|---|---|---|
| | | Sb | Sn | Pd | Ag | Al | Mo | Nb | Zr | Bi | Pb | Se | W | Zn | Cu | Ni | Co | Fe | Mn | Cr | V | Ti |
| 1 | 1.7357/1 1/4Cr | 0.00 | 0.00 | 0.00 | 0.10 | 0.00 | 0.64 | 0.00 | 0.00 | 0.00 | 0.00 | 0.00 | 0.01 | 0.01 | 0.07 | 0.32 | 0.00 | 96.88 | 0.54 | 1.37 | 0.01 | 0.05 |
| 2 | 1.4301/05/11 | 0.01 | 0.00 | 0.00 | 0.11 | 0.00 | 0.18 | 0.00 | 0.00 | 0.00 | 0.00 | 0.00 | 0.00 | 0.00 | 0.19 | 8.13 | 0.31 | 71.58 | 1.19 | 18.19 | 0.10 | 0.01 |
| 3 | 1.4404 / SS316L | 0.06 | 0.05 | 0.01 | 0.14 | 0.00 | 2.15 | 0.02 | 0.00 | 0.00 | 0.00 | 0.00 | 0.04 | 0.00 | 0.36 | 10.20 | 0.32 | 68.18 | 1.24 | 17.18 | 0.04 | 0.00 |

**Protocole établi par (visa)** H.Rey **le** 04.01.11
**Protokoll erstellt von (Visa)** **am**
**Report established by (Visa)** **on**

Appareil 409

Mitutoyo

Mitutoyo Corporation
20-1,Sakado 1-chome,Takatsu-ku,
Kawasaki,Kanagawa,213-8533Japan
Phone(044)813-8230

# ONE YEAR WARRANTY

Product Name Mitutoyo Suftest SJ-301 Code No.

Serial No. 400197 Date Purchased

Mitutoyo Corporation conducts quality assurance under ISO 9000 certified quality system.This product conforms to the MITUTOYO inspection standard, and the standard (s) used for the calibration is /are traceable to the national(international) standard (s).
In the event that this product should fail within one (1)year from the original date of purchase through normal use conforming to the User's Manual provided with the product and Warning Label(s) on the product,we will repair or replace at our option,free of charge,upon its prepaid return to Mitutoyo with this WARRANTY card.

※Purchaser is requested to fill the blank above and retain the warranty card at hand. **Return card only when requesting Warranty Service.**

Y. Yamaryo
Quality Assurance Office
Y. Yamaryo Manager

This warranty shall not apply if the product and consumables have been subject to fair wear and tear, abuse through misuse or improper use/handling/storage/maintenance/service/repair or through adaptation/modification by the original purchase or any third party without prior written consent of Mitutoyo or as a result of damage by an actual disaster or circumstances beyond the control of Mitutoyo. **To obtain service under this warranty the product must be returned to the store/dealer you purchased from along with the warranty card.** Any postage, insurance,or shipping charges incurred in returning the product for service are the responsibility of the purchaser.

※This warranty is not transferable and is only valid within the country of the original purchase.
※You may have additional rights under the laws of country of original purchase that do not allow the exclusion of implied warranties of the exclusion or limitation of certain damages If these laws apply,Mitutoyo's limitations and exclusions may not apply to you.

■ Quality Assurance under the ISO 9000 Registered Quality System
The latest status of the ISO9000 registration is posted on our website.
http://www.mitutoyo.co.jp

Mitutoyo

WA140 ⑫

# 保　証　書

商品名 コード番号

製造番号 お買い上げ日

（お願い）お買い上げの際、上記各欄の必要な項目についてご記入ください。

当社は、品質保証の国際規格「ISO9000シリーズ」に基づく品質システムにより品質保証をおこなっており、この商品は、ミツトヨ検査規格に適合し、使用した標準器は国家（国際）標準にトレーサビリティを確立しております。
取扱説明書、本体貼付ラベルなどの注意書に従った正常な使用状態で保証期間内に故障した場合には、本書記載内容により無料修理をさせていただきます。

| 保証期間（お買い上げ日より） |
| --- |
| 本　体 ： 1年 |

株式会社ミツトヨ
神奈川県川崎市高津区坂戸1-20-1 〒213-8533
電話(044)813-8201（代表）

■保証期間内でも次のような場合には有料修理となります。
◆使用上の誤り、改造や不当な修理による故障または損傷
◆お買い上げ後の移設、輸送、落下などによる故障または損傷
◆不適当な保守、保管、保存による故障または損傷
◆異常電圧、指定外の使用電源（電圧、周波数）による故障または損傷
◆消耗品の消耗による故障または損傷
◆火災、地震、水害、落雷、その他の天災地変、公害、煙害、ガス害（硫化ガスなど）による故障または損傷
◆本書のご提示がない場合
◆その他当社の責任とみなされない故障または損傷

■修理は、お買い上げの販売店または最寄りの当社営業所へご依頼ください。
※本保証書はお買い上げいただいた国においてのみ有効です。
※本保証書は再発行いたしませんので大切に保管してください。

■「ISO 9000 シリーズ」の品質システム審査登録を取得しています。
ISO9000の最新登録状況は当社ホームページにて公開しております。
http://www.mitutoyo.co.jp

**Doc No: 21327-2**
**ID No: 409**

Mitutoyo Surftest SJ-301

| | |
| --- | --- |
| DATE | 03-11-2010 |
| HEURE | 12:12:57 |
| NORME | ISO1997 |
| PROFIL | R |
| FILTRE | GAUSS |
| EVA-L | 4.0mm |
| N | 5 |
| λc | 0.8mm |
| λs | 2.5μm |
| C.INCLIN. | TOUS |
| VITESSE-M | 0.5mm/s |
| PLAGE | AUTO |
| | ESC |
| PRE/POST | ON |
| DRIVE | STAND |

R-PROFIL

| | |
| --- | --- |
| EVA-L | 4.0mm |
| λc | 0.8mmX5 |
| Ra | 2.96μm |

Mitutoyo Surftest SJ-301

| | |
|---|---|
| DATE | 09-05-2011 |
| HEURE | 14:58:11 |
| NORME | ISO1997 |
| PROFIL | R |
| FILTRE | GAUSS |
| EVA-L | 4.0mm |
| N | 5 |
| λc | 0.8mm |
| λs | 2.5μm |
| C. INCLIN. | TOUS |
| VITESSE-M | 0.5mm/s |
| PLAGE | AUTO |
| | ESC |
| PRE/POST | ON |
| DRIVE | STAND |

**R-PROFIL**

| | |
|---|---|
| EVA-L | 4.0mm |
| λc | 0.8mmX5 |
| Ra | 2.93μm |

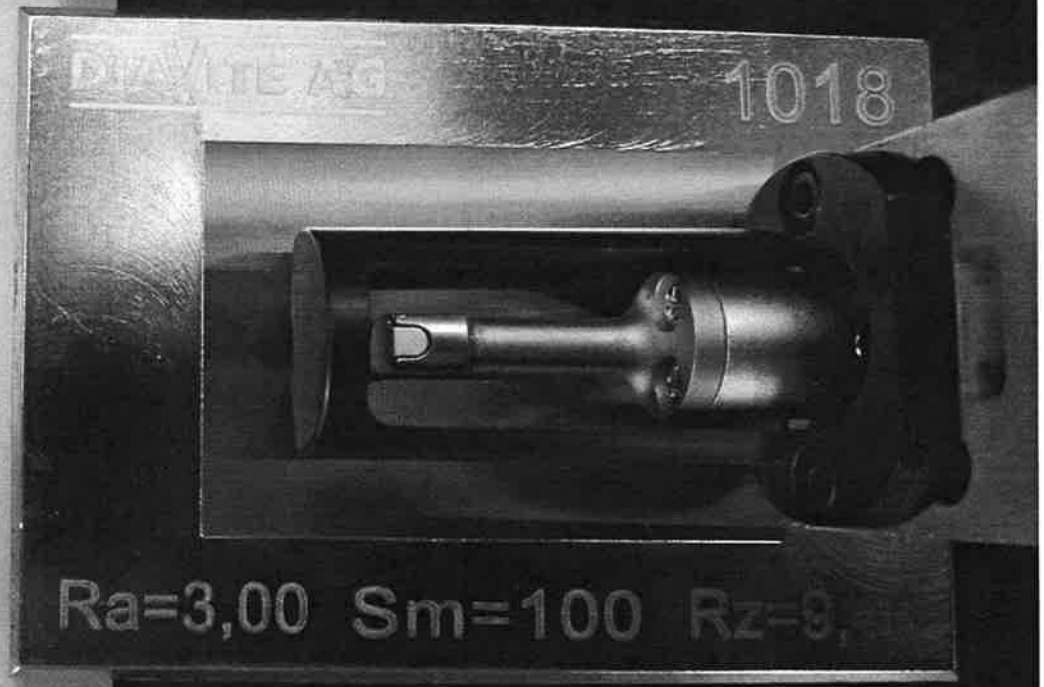


Mitutoyo SJ-301 - Test-étalon No: 438330

Doc No: 136734-1

# ATEX



Professional Milling and Handling of Powders

**Informations complémentaires pour machines Eex**
**Conditions spéciales « X »**

**Machines à fragmenter**
**Ligne MF**

**Zusatz - Sicherheitshinweise EEx- Maschinen**
**Besondere Bedingungen « X »**

**Zerkleinerungs- und Siebmaschinen**
**MF Riehe**

**Additional information for EEx-Machines**
**Special conditions « X »**

**Sizing & sieving mills**
**MF- Line**

## Indications de sécurité :

L'installation ne peut être qu'utilisée dans les conditions admises, décrites dans le manuel d'utilisation standard.

Une utilisation non conforme de l'installation ou une mise en service de l'installation sans respecter le mode d'emploi peut entraîner une annulation de garantie du fabricant.

Les modifications et corrections de l'installation qui influencent la protection antidéflagrante ne sont pas permises.

- La protection de l'installation contre une surpression, coups de bélier (à cause d'une explosion) et une augmentation de température non admise est à prévoir du côté de l'utilisateur. L'installation n'est pas conçue pour retenir une explosion.
- La détérioration de l'installation par l'utilisateur doit être prise en considération et être exclue d'une manière efficace.

## Sicherheitshinweise :

Verwenden Sie das Betriebsmittel „Zerkleinerungsmaschine Typ MF" nur für den zugelassenen Einsatzzweck, wie beschrieben in der Standard Betriebsanleitung.

Fehlerhafter oder unzulässiger Einsatz sowie das Nichtbeachten der Hinweise dieser Sicherheitshinweise schließt eine Gewährleistung der FREWITT SA aus.

Umbauten sowie Veränderungen am Betriebsmittel „ Zerkleinerungsmaschine Typ MF", die den Explosionsschutz beeinträchtigen, sind nicht gestattet.

- Die Absicherung der Maschine gegen unzulässigen Druck, Druckstoss, Temperatur und falsche Drehrichtung ist Anlagenseitig zu gewährleisten.
  Die Maschine ist nicht Druckstossfest gebaut.
- Weiterhin muss ein absichtlicher Missbrauch vom Betreiber in Betracht gezogen werden.

## Safety Indications :

Do only use the MF sieving machine in the allowed conditions and purposes, as described in the standard operating instructions of the machine.

In case of a non-conform use of the machine, as well as a start-up of the machine without consulting the instruction manual excludes further guarantee of the machine by Frewitt

Modifications and adaptations on the MF sieving machine that modified the explosion protection are not allowed.

- Protection against a not allowed Pressure level, pressure wave (due to an explosion), temperature and a wrong rotation direction has to be implemented by the user. The machine does NOT resist to an explosion.
- Furthermore, avoiding the abuse of the machine is also duty of the user.

Professional Milling and Handling of Powders

## Conditions spéciales «X» :

Basées sur les justifications thermiques, les conditions suivantes ont été fixées :

- La température ambiante pendant le fonctionnement de l'installation est limitée de Temp ≥ -20°C à ≤ +35°C

**L'installation est conçue sans tenir compte des dangers induits par la matière à fragmenter.**

**L'utilisateur doit par sa propre responsabilité écarter tout risque d'explosion pour garantir l'utilisation correcte de l'installation**

L'installation est, selon son équipement, utilisable dans les zones à dangers d'explosion pour les **zones 1 ou 21.** (voir plaquette signalétique)

Toutes les pièces mécaniques, directement en contact avec le produit, sont approuvées pour les **zones 0 et 20.**

## Besondere Bedingungen «X»:

Aufgrund des internen Prüfberichtes wurden die folgenden besonderen Bedingungen definiert.

- Die Umgebungstemperatur im Betrieb ist begrenzt von -20°C bis +35°C

**Das Betriebsmittel „ Zerkleinerungsmaschine Typ MF" ist konzipiert ohne Berücksichtigung allfälliger Gefährdungen der zu verarbeiteten Feststoffe**

**Der Betreiber muss in eigener Verantwortung dafür sorgen, dass allfällige Gefährdungen der Feststoffe im Explosionsschutzdokument berücksichtigt werden.**

Das Betriebsmittel „ Zerkleinerungsmaschine Typ MF" ist je nach Ausführung für den Einsatz in den **Zonen 1 oder 21** zugelassen (siehe Typenschild)

Alle mechanischen Teilen, die direkt mit den zu verarbeiteten Stoffen in Kontakt kommen, sind für die **Zonen 0 und 20** geeignet.

## Special conditions « X » :

In accordance to the internal thermal tests, the next conditions are allowed :

- The environment temperature Tamb is limited : -Tamb □ -20°C till □ +35°C.

**The MF sieving machine is been developed without consideration of all kinds of danger due to the used solids in the machine.**

**The user of the machine has to take care of the explosion risk assessment to guarantee the proper functioning of the machine.**

The MF sieving machine is depending on the execution allowed to be used in a hazardous environment in the **zone 1 or 21** (see label on machine)

All the mechanical parts, direct in contact with the treated material, are all allowed for the **zone 0 and 20.**

Professional Milling and Handling of Powders

## Indications et recommandations techniques pour l'utilisation conforme à l'installation

Les caractéristiques des produits utilisés sur l'installation doivent correspondre aux exigences selon la « Tabelle 1 : Caractéristiques spécifiques des produits »

| Caractéristiques thermique | Valeur « Poussière » | Valeur « Gaz » |
|---|---|---|
| Température d'allumage minimale pour les gaz | | T4 |
| Température d'allumage minimale d'une couche de poussière | > 205°C | |
| Température d'allumage minimale d'un nuage de poussière | >195°C | |
| Energie d'allumage minimale | >1 mJ | >1 mJ |

Tabelle 1 : caractéristiques spécifiques des produits

- Uniquement les solvants ou les produits contenants des solvants du groupe de gaz IIA et IIB peuvent être utilisés sur l'installation.
- L'obstruction du treillis par le produit peut engendrer une augmentation de la température du produit et provoquer de cette manière une explosion. L'obstruction du treillis par le produit est une situation qui n'est pas permise. Le passage du produit doit être continuellement garanti par l'utilisateur.
- Les produits utilisés dans l'installation ne doivent pas être sensible aux chocs mécaniques. Les particules étrangères dans le produit ne sont pas admises.

## Angaben und Sicherheitstechnische Limitierungen zur bestimmungsgemässer Verwendung :

Die Eigenschaften der verwendeten Feststoffe müssen Kennzahlen gemäss « Tabelle 1: Produktspezifischen Daten » erfüllen.

| Brenneigenschaften | Kennzahl « Staub » | Kennzahl « Gas » |
|---|---|---|
| Minimale Zündtemperatur für Gase | | T4 |
| Mindestzündtemperatur einer Staubschicht | > 205°C | |
| Mindestzündtemperatur einer Staubwolke | >195°C | |
| Mindest Zündenergie | >1 mJ | >1 mJ |

Tabelle 1 :Produktspezifischen Daten

- Es dürfen nur Organische Lösungsmittel oder Lösungsmittelhaltenden Feststoffen verwendet werden, die die Gasgruppe IIA oder IIB entsprechen.
- Verstopfungen im oder am Sieb können zu Temperaturerhöhungen führen und eine Explosion auslösen. Das Verstopfen im oder am Sieb ist unter allen Umständen zu vermeiden. Vom Betreiber ist der kontinuierliche Durchsatz sicher zu stellen.
- Es dürfen ausschliesslich schlagunempfindliche und Fremdkörperfreie Feststoffen verarbeiteten werden.

## Dedicated use: Indications and safety limitations

The properties of the solids used on the machine have to correspond with« Table 1: Product specific Information ».

| Fire characteristics | Value « Dust » | Value " Gas " |
|---|---|---|
| Minimum ignition temperature for gas | | T4 |
| Minimum striking temperature of a dust film | > 205°C | |
| Minimum ignition temperature of a dust cloud | >195°C | |
| Minimum ignition energy | >1 mJ | >1 mJ |

Table 1: product specific Information

- It is only allowed to use solvents or solvent-contained solids that correspond to the gas-group IIA or IIB.
- Obstruction of the screen by the solids may increase the temperature and cause an explosion. The obstruction of the screen is not allowed. The conditions to avoid obstruction has to be assured by the user.
- The used solids may not be shock-sensitive. Foreigner particles in the product are not allowed.

Professional Milling and Handling of Powders

- Si dans le cas où l'évaluation des risques d'explosion finale, rédigée par l'utilisateur, ne couvre pas entièrement l'analyse de risques de l'installation, le questionnaire de Frewitt doit être rempli ou un cahier des charges de la part de l'utilisateur doit être transmis pour permettre une nouvelle appréciation des risques.

- Führt die Bewertung der Betreiber zu dem Ergebniss, dass das Risiko oberhalb des tolerierbaren Risikos liegt, so muss der Atex-Fragenbogen ausgefüllt werden, oder ein Detailliertes Pflichtenheft abgegeben werden, woraus anschliessend mittels eine erneute Risikobeurteilung weitere Schutzmassnahmen berücksichtigt werden.

- Adequate precautions has to be taken if the risk assessment results in the fact that the risk is higher than the tolerable risk. In this case, the Frewitt Atex-List has to be filled in, or user specifications has to be transmitted to Frewitt.. Afterwards a new risk assessment has to be realised.

**Faire attention aux points suivants pendant le montage, la mise en service et le fonctionnement de l'installation :**

- Indications de sécurité de ce mode d'emploi.
- les indices et conditions de fonctionnement de la plaquette signalétique.
- Les indications supplémentaires sur l'installation.
- Les certificats Atex , les certificats de conformité et les certificats des pièces détachées et leur contenu concernant les conditions spéciales de fonctionnement.
- Les différents modes d'emploi, instructions de montage et d'utilisation et prescriptions de sécurité des éléments installés sur l'installation.
- Les endommagements, les corrections et les modifications sans permission excluent une garantie de la part du fabricant. On ne peut dans aucun cas, dû a une source de chaleur extérieure, constater une augmentation de la température de la surface de l'installation pendant le fonctionnement de l'installation.
- Les normes de sécurité, de montage et de mise en service nationale, ainsi que les règles de la technique sont également à appliquer.

**Bei Errichtung und Betrieb ist Folgendes unbedingt zu beachten :**

- Die Sicherheitshinweise in der Betriebsanleitung
- Die Kennwerte und Betriebsbedingungen gemäß der Typen- und Datenschilder
- Die zusätzlichen Hinweisschilder auf dem Betriebsmittel
- Die EG - Baumusterprüfbescheinigung (nach ATEX 94/9/EG), der Konformitätsnachweis bzw. die Konformitäts- oder Teilbescheinigungen (nach bisheriger Zulassung) und die darin enthaltenen besonderen Bedingungen (falls vorhanden)
- Sämtliche Bedienungsanleitungen, Montage-, Anwendungs- und Sicherheitsvorschriften der im Betriebsmittel „ Zerkleinerungsmaschine Typ MF“ eingebauten Geräte. Bei der Installation ist speziell zu beachten, dass das Betriebsmittel „ Zerkleinerungsmaschine Typ MF“ nicht zusätzlich aufgewärmt wird. Die zulässigen Oberflächentemperaturen darf auf keinen Fall überschritten werden
- Die nationalen Sicherheits-, Montage- und Errichtungsvorschriften sowie die allgemein anerkannten und gültigen Regeln der Technik

**Pay attention to the next points during the assembly, start-up and during running of the machine :**

- Safety indications in the instruction manual
- The conditions of installation and connections according to the label
- additional indications on the machine
- The-Atex-certificates , conformity-certificates and the individual certificates of the parts and there explanations concerning special conditions
- Different instruction manuals, assembly and user instructions , safety instructions of the elements installed on the MF sieving machine.
- Damage, adaptations and modifications without permission excludes further guarantee of the machine by Frewitt. It is not allowed to increase the temperature of the surface of the machine due to external sources during the functioning of the MF sieving machine.
- National Safety norms, national assembly and start-up formalities, as well as technical rules are also applicable.

Professional Milling and Handling of Powders

**En cas de non-respect des instructions, ou en cas d'endommagement, de modifications non-conformes de l'installation, la certification selon ATEX 94/9/CE n'est plus valide.**

**Werden die genannten Hinweise nicht beachtet oder weist das Betriebsmittel Beschädigungen auf oder wurden zusätzliche nicht bewilligte Einbauten angebracht, wird der Explosionsschutz nach ATEX 94/9/EG automatisch aufgehoben.**

**In case of non respect of the indications, damage occurred to the installation, or non conform modifications have been realised, the ATEX 94/9/EC certification is not valid anymore.**

Professional Milling and Handling of Powders

electrosuisse

(1)

# Notification of recognition of the quality assurance production

Annex IV

(2) Equipment or protective system intended for use in potentially explosive atmospheres - **Directive 94/9/EC**

(3) Conformity certificate number

**SEV 09 ATEX 4137**

(4) Equipment: Machines in the type of protection Liquid Immersion "k", Control of Ignition Source "b", Constructional Safety "c", Increased Safety "e", Flameproof Enclosures "d" and Resistent Equipment

A list of the EC-Type Examination Certificates covered by this notification is held by the notified body.

(5) Applicant: Frewitt Fabrique de machines SA
Route du Coteau 7, CH-1763 Granges-Paccot

(6) Manufacturer: Frewitt Fabrique de machines SA
Route du Coteau 7, CH-1763 Granges-Paccot

(7) Electrosuisse, notified body number 1258 for Annex IV in accordance with article 9 of the council Directive 94/9/EC notifies to the manufacturer that he has a production quality system which complies with Annex IV of the Directive.

(8) This notification is based on audit report no. 09-IK-0183.01 dated 2009-12-03.

(9) The results of a regular repeat evaluation of the quality assurance system form part of this notice.

(10) This notification is valid until 2012-12-20 and can be withdrawn if the manufacturer no longer satisfies the requirements of Annex IV.

(11) The notified body assessing the examination phase must, according to article 10 (1) of the Directive 94/9/EC, be indicated by showing the notified body number 1258 of SEV beside the CE mark.

**Electrosuisse SEV**
Certification Body ATEX

Fehraltorf, 2009-12-21

Martin Plüss
Product Certification



**SEV** Verband für Elektro-, Energie- und Informationstechnik
**SEV** Association pour electrotechnique, les technologies de l'enegie et de l'information
**SEV** Associazione per elettrotecnica, la tecnica energetica e l'informatica
**SEV** Association for Electrical Engineering, Power and Information Technologies

Luppmenstrasse 1
CH-8320 Fehraltorf

Tel. +41 (0)44 956 11 11
Fax +41 (0)44 956 11 22
info@electrosuisse.ch
www.electrosuisse.ch

GRAND-DUCHE DE LUXEMBOURG

# Société Nationale de Certification et d'Homologation s.à r.l.

## EC-TYPE EXAMINATION CERTIFICATE

**Equipment or Protective System Intended for use in Potentially explosive atmospheres Directive 94/9/EC**

EC-Type Examination Certificate Number: **SNCH 03 ATEX 3486 X**

Equipment or Protective System: **Sizing and sieving mills type MF-***

Manufacturer: **Frewitt Fabrique de machines SA**
**Route du Coteau 7**
**CH-1763 Granges-Paccot**

This equipment or protective system and any acceptable variation thereto is specified in the schedule to this certificate and the documents therein referred to.

*Société Nationale de Certification et d'Homologation s.à r.l.*, notified body no. 0499, in accordance with Article 9 of the Council Directive 94/9/EC of 23 March 1994, certifies that this equipment or protective system has been found to comply with the Essential Health and Safety Requirements relating to the design and construction of equipment or protective systems intended for use in potentially explosive atmospheres given in Annex II to the Directive.

The examination and test results are recorded in confidential report n° **03-IK-0325.01 with Extension n° 1**.

Compliance with the Essential Health and Safety Requirements has been assured by compliance with:

**EN 1127-1:2007 / EN 13463-1:2009 / EN 13463-5:2003**

If the sign "X" is placed after the certificate number, it indicates that the equipment or protective system is subject to special conditions for safe use specified in the schedule to this certificate.

This EC Type examination certificate relates only to the design, examination and tests of the specified equipment or protective system in accordance to the directive 94/9/EC. Further requirements of the Directive apply to the manufacturing process and supply of this equipment or protective system.These are not covered by this certificate.

The marking of the equipment or protective system shall include the following:

*cf. page 2/2*

*This certificate may only be reproduced in its entirety and without any change, schedule included.*



Luxembourg, 2010-02-01

Claude LIESCH
Directeur

Société Nationale de Certification et d'Homologation s.à r.l.
✉ 11, rue de Luxembourg B.P. 23
L-5201 SANDWEILER
☎ (Int+352) 46 97 46-32 Fax (Int+352) 22 25 07
F2-1.A3 / V1 / 2009-09-07

GRAND-DUCHE DE LUXEMBOURG

# Société Nationale de Certification et d'Homologation s.à r.l.

## Schedule

### EC-TYPE EXAMINATION CERTIFICATE

### N° *SNCH 03 ATEX 3486 X*

Description of Equipment or Protective system:

Sizing and sieving mills FREWITT

Types:

MF-3 ($P_N$ = 0.55 kW)
MF-6 ($P_N$ = 1.1 kW)
MF-8 ($P_N$ = 2.2 kW)

Report: *N° 03-IK-0325.01 with Extension n° 1*

Special conditions for safe use: *s. report*

Essential health and safety requirements: *covered by standards*

Ex classification (depending on configuration):

| | | | |
|---|---|---|---|
| Ex | II 1/2 G c/c * IIB T4 X | and/or | II 1/2 D c/c * IIB T130°C IP65 X |
| Ex | II1/3 G c/c * IIB T4 X | and/or | II 1/3 D c/c * IIB T130°C IP65 X |
| Ex | II 2/3 G c/c * IIB T4 X | and/or | II 2/3 D c/c * IIB T130°C IP65 X |
| Ex | II 2 G c * IIB T4 X | and/or | II 2 D c * IIB T130°C IP65 X |

(* To be completed according to installed enclosure with separate conformity evaluation procedure

*This certificate may only be reproduced in its entirety and without any change, schedule included.*



Luxembourg, 2010-02-01

Claude LIESCH
Directeur

Société Nationale de Certification et d'Homologation s.à r.l.
✉ 11, rue de Luxembourg B.P. 23
L-5201 SANDWEILER
☎ (Int+352) 46 97 46-32 Fax (Int+352) 22 25 07

electrosuisse

# EG-Baumusterprüfbescheinigung

(1)

(2) Geräte und Schutzsysteme zur bestimmungsgemässen Verwendung in explosionsgefährdeten Bereichen - **Richtlinie 94/9/EG**

(3) Prüfbescheinigungsnummer

**SEV 06 ATEX 0133**

(4) Gerät: Steuerung Typ DM bzw. PF

(5) Hersteller: FREWITT Fabrique de machines SA

(6) Anschrift: Route du Coteau 7, CH-1763 Granges-Paccot

(7) Die Bauart dieses Gerätes sowie die verschiedenen zulässigen Ausführungen sind in der Anlage zu dieser Prüfbescheinigung festgelegt.

(8) Die Electrosuisse SEV bescheinigt als benannte Stelle Nr. 1258 nach Artikel 9 der Richtlinie des Rates der Europäischen Gemeinschaften vom 23. März 1994 (94/9/EG) die Erfüllung der grundlegenden Sicherheits- und Gesundheitsanforderungen für die Konzeption und den Bau von Geräten und Schutzsystemen zur bestimmungsgemässen Verwendung in explosionsgefährdeten Bereichen gemäss Anhang II der Richtlinien.

Die Ergebnisse der Prüfung sind in dem vertraulichen Prüfbericht 06-IK-0149.01 inkl. Erweiterung Nr. 1 festgelegt.

(9) Die grundlegenden Sicherheits- und Gesundheitsanforderungen werden erfüllt durch Übereinstimmung mit

**EN 1127-1:2007** **EN 60079-0:2006** **EN 60079-1:2007**
**EN 61241-0:2006** **EN 61241-1:2004**

(10) Falls das Zeichen «X» hinter der Bescheinigungsnummer steht, wird auf besondere Bedingungen für die sichere Anwendung des Gerätes in der Anlage zu dieser Bescheinigung hingewiesen.

(11) Diese Baumusterprüfbescheinigung bezieht sich nur auf Konzeption und Bau des festgelegten Gerätes gemäss Richtlinie 94/9/EG. Weitere Anforderungen dieser Richtlinie gelten für die Herstellung und das Inverkehrbringen des Gerätes.

(12) Die Kennzeichnung des Gerätes muss die folgenden Angaben enthalten:

**siehe Anlage Seite 2: (19) Kennzeichnung**

**Electrosuisse SEV**
Konformitätsbewertungsstelle ATEX

Fehraltorf, 27.05.2009
ersetzt Bescheinigung vom
11.05.2009, Korrekturen

Erich Obrist
Zertifizierung Produkte



**SEV** Verband für Elektro-, Energie- und Informationstechnik
**SEV** Association pour electrotechnique, les technologies de l'enegie et de l'information
**SEV** Associazione per elettrotecnica, la tecnica energetica e l'informatica
**SEV** Association for Electrical Engineering, Power and Information Technologies

Luppmenstrasse 1
CH-8320 Fehraltorf

Tel. +41 (0)44 956 11 11
Fax +41 (0)44 956 11 22
info@electrosuisse.ch
www.electrosuisse.ch

(13) # Anlage

(14) **EG-Baumusterprüfbescheinigung SEV 06 ATEX 0133**

(15) Beschreibung des Gerätes
Die Steuerung FREWITT Typ DM bzw. PF wird in den durch die Serienummer bestimmten Ausführungsvarianten für gas- und/oder staubexplosionsgefährdete Bereiche in den Zündschutzarten „Druckfeste Kapselung“ und/oder „Schutz durch Gehäuse“ entsprechend den Anforderungen der Kategorien 2 bzw. 3 gefertigt.

Die geprüften Geräte sind Baugruppen, bestehend aus Komponenten, die ein Konformitätsbewertungsverfahren gemäss Artikel 8 der Richtlinie 94/9/EG durchlaufen haben sowie aus Teilen ohne Anforderungen an den Explosionsschutz.

Für jede Ausführungsvariante der Baugruppe wird ein thermischer Nachweis erstellt.

(16) Prüfbericht 06-IK-0149.01 inkl. Erweiterung Nr. 1

(17) Besondere Bedingungen
Keine

(18) Grundlegende Sicherheits- und Gesundheitsanforderungen
Durch die angewandten Normen erfüllt.

(19) Kennzeichnung
Die Kennzeichnung des Gerätes muss die folgenden Angaben enthalten:

| | | | |
|---|---|---|---|
| Ex | **II 2G** | **Ex d* IIB T6** | und / oder |
| | **II 2D** | **Ex tD A21 IP65 T85°C** | |
| | | | bzw. |
| Ex | **II 3G** | **Ex d* IIB T6** | und / oder |
| | **II 3D** | **Ex tD A22 IP65 T85°C** | |

(* = Ergänzung je nach eingebauten Geräten mit gesonderten Konformitätsbewertungsverfahren)

**Electrosuisse SEV**
Konformitätsbewertungsstelle ATEX

Fehraltorf, 27.05.2009
ersetzt Bescheinigung vom 11.05.2009, Korrekturen

Erich Obrist
Zertifizierung Produkte



**SEV** Verband für Elektro-, Energie- und Informationstechnik
**SEV** Association pour electrotechnique, les technologies de l'enegie et de l'information
**SEV** Associazione per elettrotecnica, la tecnica energetica e l'informatica
**SEV** Association for Electrical Engineering, Power and Information Technologies

Luppmenstrasse 1
CH-8320 Fehraltorf

Tel. +41 (0)44 956 11 11
Fax +41 (0)44 956 11 22
info@electrosuisse.ch
www.electrosuisse.ch

**Client:** **Kunde:** **Customer:**
**NOVARTIS SINGAPORE PHARMACEUTICAL**
**SG-Singapore**

**N° Série:** **Serien-Nr.** **Serial Nr.**
11007821034

**465036 / 465107**

**465085 / Electrical Part**

| Article N°<br>Artikel Nr.<br>Article ID. | Description<br>Beschreibung<br>Description | Position<br>Position<br>Position | No Document<br>Dokument-Nr<br>Document ID |
|---|---|---|---|
| . 464896 | Lifting Tower - Servolift selon offre 213614 / 2 Pos.2.0 / 3.0 / 4.0 / 5.0 / 6.0 | | - |
| . . . 453536 | Preparation unit ATEX 2GD | | 38838-2 |
| . . . 436876 | Pneumatic Piston Vibrator NTP25B+C SE Inox, Netter, zone 2G/2D, IP65, T4 | | 32262-0 |
| . . 436111 | Gear unit Lenze GSS04-2NVB/1D 1410/156 rpm i=9.8 IMB14 60NM | | 23424-0 |
| . . 461222 | Motor 4P LSPX90S 1.0kW Ex II2D Ex tD A21 IP65 T125°C B14 230VD/400VY 50Hz VMA31T | | - |
| . 404568 | Magnet switch M30x1.5x52, Elobau 671/271-MU0-5 | -G10 | 27255-1 |
| . 404568 | Magnet switch M30x1.5x52, Elobau 671/271-MU0-5 | -G20 | 27255-1 |
| . 404568 | Magnet switch M30x1.5x52, Elobau 671/271-MU0-5 | -G30 | 27255-1 |
| . 406886 | Detector Namur Ex 1.5 M8 | -S10 | 16317-2 |
| . 407586 | Terminal box 85/85/55 Exi | -XJB1 | 16410-2 |
| . 411946 | Amplifier 2x 0 relay 24 VDC | -U5 | 16319-0 |
| . 417735 | Converter f/I 230V AC/DC | -U2 | 16419-1 |
| . 429506 | Digital display 4d Exia,PR Electronics | -P1 | 16216-0 |
| . 442787 | Separate amplifier Exi 24VDC,2F | -U3 | 44245-1 |
| . 454256 | Relay PTC Atex, 24VDC, 2OF 3RN10 11-1BB00 | -K6 | 106060-1 |
| . 456540 | Terminal - grey 6mm2 UK 6 N | -X0 | 112598-1 |
| . 456541 | PE Terminal 2.5mm2 USLKG 3 | -XI2 | 112600-1 |
| . 456542 | PE Terminal 6mm2 USLKG 6 N | -X0 | 112601-1 |
| . 456548 | Terminal - blue 2.5mm2 UK 3 N BU | -XI1 | 112598-1 |
| . 456548 | Terminal - blue 2.5mm2 UK 3 N BU | -XI2 | 112598-1 |
| . 457042 | Terminal - blue 6mm2 UK 6 N BU | -X0 | 112598-1 |

# [1] EC-TYPE EXAMINATION CERTIFICATE

[2] **Equipment or Protective System intended for use in Potentially Explosive Atmospheres Directive 94/9/EC**

[3] EC-Type Examination Certificate Number: **DEMKO 02 ATEX 132122**

[4] Equipment: Loop-powered LCD indicator, type 5531B

[5] Manufacturer: PR Electronics A/S

[6] Address: Lerbakken 10, 8410 Rønde, Denmark

[7] This equipment or protective system and any acceptable variation there to is specified in the schedule to this certificate and the documents therein referred to.

[8] UL International Demko A/S, notified body number 0539 in accordance with Article 9 of the Council Directive 94/9/EC of 23 March 1994, certifies that this equipment or protective system has been found to comply with the Essential Health and Safety Requirements relating to design and construction of equipment and protective systems intended for use in potentially explosive atmospheres given in Annex II to the Directive.

The examination and test results are recorded in confidential report no. 132122-01

[9] Compliance with the Essential Health and Safety Requirements has been assured by compliance with:
**EN 50014: 1997 E** incl. A1+A2 **EN 50020: 1994 E**
**EN 50284: 1999**

[10] If the sign "X" is placed after the certificate number, it indicates that the equipment or protective system is subject to special conditions for safe use specified in the schedule to this certificate.

[11] This EC-Type examination certificate relates only to the design, examination and tests of the specified equipment or protective system in accordance to the Directive 94/9/EC. Further requirements of the Directive apply to the manufacturing process and supply of this equipment or protective system. These are not covered by the certificate.

[12] The marking of the equipment or protective system shall include the following:

**Ex II 1G EEx ia IIC T6**

On behalf of UL International Demko A/S

Herlev, 2002-08-09

Steen Lumby
Certification Manager

**UL International Demko A/S**
Lyskaer 8, P.O. Box 514
DK-2730, Herlev, Denmark
Telephone: +45 44856565
Fax: +45 44856500



This certificate may only be reproduced in its entirety and without any change, schedule included

A Subsidiary of Underwriters Laboratories Inc.®

[13] # Schedule

[14] ## EC-TYPE EXAMINATION CERTIFICATE No. DEMKO 02 ATEX 132122

[15] Description of Equipment or protective system:

Preview 5531B is a loop-powered LCD indicator for local readout of 4-20 mA current signals scaled directly in process units. Preview 5531B does not need any external power supply since the indicator is powered by the 4-20 mA loop signal. The indicator is fit with DIP switch to enable/disable the front keys thus facilitating scaling.

[16] Report No.:

132122-01

Drawings:

| Number | Date | Description |
|---|---|---|

The Schedule drawings are listed in the document entitled "5531G0".

The manufacturer shall inform the notified body concerning all modifications to the technical documentation as described in ANNEX III to Directive 94/9/EC of the European Parliament and the Council of 23 March 1994.

The certificate entitles the licensee to provide the product with the registered mark Ⓓ and the Epsilon-x mark Ⓔx.

[17] Special conditions for safe use:

$U_i$ : 45V
$I_i$ : 500mA DC
$P_i$ : 0,9W
$L_i$ : 0mH
$C_i$ : 0µF

- Ambient temperature range: -20°C ≤ Ta ≤ +60°C.
- The 5531B (dip switch and terminals) may not be mounted closer than 50 mm from other non intrinsically safe equipment.



This certificate may only be reproduced in its entirety and without any change, schedule included

[18] Essential Health and Safety Requirements

Concerning ESR this Schedule verifies compliance with the Ex standards only. The manufacturer's Declaration of Conformity declares compliance with other relevant Directives.

On behalf of UL International Demko A/S

Herlev, 2002-08-09

Steen Lumby
Certification Manager

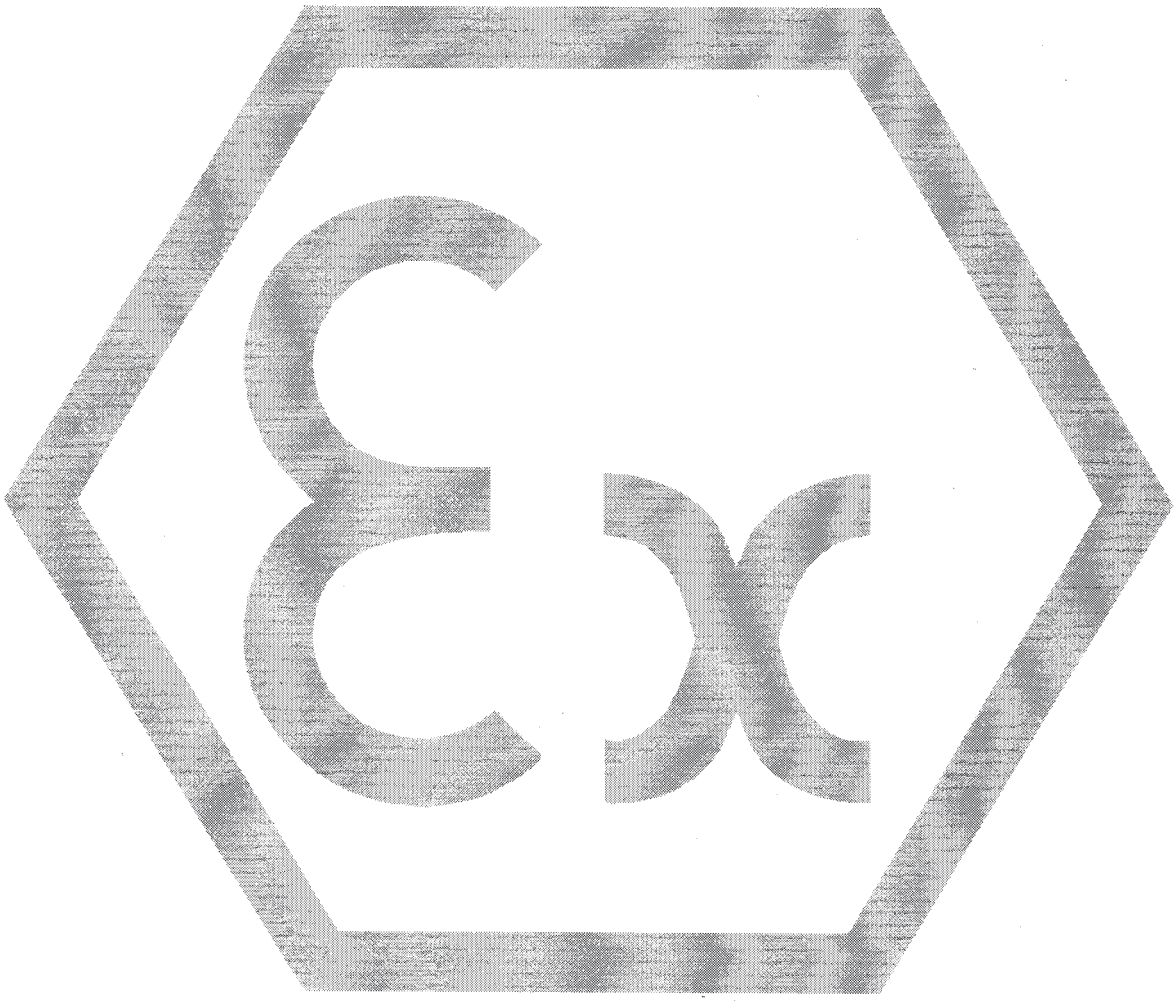

**UL International Demko A/S**
Lyskaer 8, P.O. Box 514
DK-2730, Herlev, Denmark
Telephone: +45 44856565
Fax: +45 44856500



This certificate may only be reproduced in its entirety and without any change, schedule included

A Subsidiary of
Underwriters Laboratories Inc.®

Doc No: 16216-0

# DECLARATION OF CONFORMITY

As manufacturer

**PR electronics A/S**
**Lerbakken 10**
**DK-8410 Rønde**

hereby declares that the following product:

**Type: 5531**
**Name: Loop-powered LCD indicator**

is in conformity with the following directives and standards:

EMC directive 89/336/EEC and later amendments

**From serial no.: 950210 ff**
**EN 61 326**
**EN 50 081-1, EN 50 081-2**
**EN 50 082-1, EN 50 082-2**

This declaration is issued in compliance with article 10, subclause 1 of the EMC directive. For specification of the acceptable EMC performance level, refer to the electrical specifications for the module.

The ATEX directive 94/9/EC and later amendments

**From serial no.: 020180001 ff**
**EN 50 014 and EN 50 020**
**Ex certificate: 02 ATEX 132122**

Notified body for CENELEC/ATEX: UL International Demko A/S 0539

Rønde, 30 May 2002

Peter Rasmussen
Manufacturer's signature

# Physikalisch-Technische Bundesanstalt

**Braunschweig und Berlin**

PTB

Doc No: 16317-2

(1) # EG-Baumusterprüfbescheinigung

(2) Geräte und Schutzsysteme zur bestimmungsgemäßen Verwendung in explosionsgefährdeten Bereichen - **Richtlinie 94/9/EG**

(3) EG-Baumusterprüfbescheinigungsnummer

**PTB 00 ATEX 2048 X**

(4) Gerät: Zylinderförmige induktive Sensoren Typen NC... und NJ...

(5) Hersteller: Pepperl + Fuchs GmbH

(6) Anschrift: D-68307 Mannheim

(7) Die Bauart dieses Gerätes sowie die verschiedenen zulässigen Ausführungen sind in der Anlage zu dieser Baumusterprüfbescheinigung festgelegt.

(8) Die Physikalisch-Technische Bundesanstalt bescheinigt als benannte Stelle Nr. 0102 nach Artikel 9 der Richtlinie des Rates der Europäischen Gemeinschaften vom 23. März 1994 (94/9/EG) die Erfüllung der grundlegenden Sicherheits- und Gesundheitsanforderungen für die Konzeption und den Bau von Geräten und Schutzsystemen zur bestimmungsgemäßen Verwendung in explosionsgefährdeten Bereichen gemäß Anhang II der Richtlinie.

Die Ergebnisse der Prüfung sind in dem vertraulichen Prüfbericht PTB Ex 00-29206 festgelegt.

(9) Die grundlegenden Sicherheits- und Gesundheitsanforderungen werden erfüllt durch Übereinstimmung mit

**EN 50014:1997** **EN 50020:1994**

(10) Falls das Zeichen „X" hinter der Bescheinigungsnummer steht, wird auf besondere Bedingungen für die sichere Anwendung des Gerätes in der Anlage zu dieser Bescheinigung hingewiesen.

(11) Diese EG-Baumusterprüfbescheinigung bezieht sich nur auf Konzeption und Bau des festgelegten Gerätes gemäß Richtlinie 94/9/EG. Weitere Anforderungen dieser Richtlinie gelten für die Herstellung und das Inverkehrbringen dieses Gerätes.

(12) Die Kennzeichnung des Gerätes muß die folgenden Angaben enthalten:

**II 2 G EEx ia IIC T6**

Zertifizierungsstelle Explosionsschutz
Im Auftrag

Dr.-Ing. U. Johannsmeyer
Regierungsdirektor

Braunschweig, 26. September 2000

PHYSIKALISCH-TECHNISCHE BUNDESANSTALT 24



EG-Baumusterprüfbescheinigungen ohne Unterschrift und ohne Siegel haben keine Gültigkeit.
Diese EG-Baumusterprüfbescheinigung darf nur unverändert weiterverbreitet werden.
Auszüge oder Änderungen bedürfen der Genehmigung der Physikalisch-Technischen Bundesanstalt.

Physikalisch-Technische Bundesanstalt • Bundesallee 100 • D-38116 Braunschweig

(13) # Anlage

(14) ## EG-Baumusterprüfbescheinigung PTB 00 ATEX 2048 X

(15) Beschreibung des Gerätes

Die zylinderförmigen induktiven Sensoren Typen NC... und NJ...dienen zur Umformung von Wegänderungen in elektrische Signale.

Die zylinderförmigen induktiven Sensoren dürfen mit eigensicheren Stromkreisen, die für die Kategorien und Explosionsgruppen [EEx ia] IIC oder IIB bzw. [EEx ib] IIC oder IIB bescheinigt sind, betrieben werden. Die Kategorie sowie die Explosionsgruppe der eigensicheren zylinderförmigen induktiven Sensoren richtet sich nach dem angeschlossenen speisenden eigensicheren Stromkreis.

Elektrische Daten

Auswerte- und
Versorgungsstromkreis..... in Zündschutzart Eigensicherheit EEx ia IIC/IIB
bzw. EEx ib IIC/IIB

nur zum Anschluß an bescheinigte eigensichere Stromkreise
Höchstwerte:

| Typ 1 | Typ 2 | Typ 3 | Typ 4 |
|---|---|---|---|
| $U_i$ = 16 V | $U_i$ = 16 V | $U_i$ = 16 V | $U_i$ = 16 V |
| $I_i$ = 25 mA | $I_i$ = 25 mA | $I_i$ = 52 mA | $I_i$ = 76 mA |
| $P_i$ = 34 mW | $P_i$ = 64 mW | $P_i$ = 169 mW | $P_i$ = 242 mW |

Der Zusammenhang zwischen dem Typ des angeschlossenen Stromkreises, der höchstzulässigen Umgebungstemperatur und der Temperaturklasse sowie den wirksamen inneren Reaktanzen für die einzelnen Typen der zylinderförmigen induktiven Sensoren ist der Tabelle zu entnehmen:



EG-Baumusterprüfbescheinigungen ohne Unterschrift und ohne Siegel haben keine Gültigkeit.
Diese EG-Baumusterprüfbescheinigung darf nur unverändert weiterverbreitet werden.
Auszüge oder Änderungen bedürfen der Genehmigung der Physikalisch-Technischen Bundesanstalt.

Physikalisch-Technische Bundesanstalt • Bundesallee 100 • D-38116 Braunschweig

# Physikalisch-Technische Bundesanstalt

**Braunschweig und Berlin**

**Anlage zur EG-Baumusterprüfbescheinigung PTB 00 ATEX 2048 X**

| Typen | $C_i$ [nF] | $L_i$ [µH] | Typ 1 | | | Typ 2 | | | Typ 3 | | | Typ 4 | | |
|---|---|---|---|---|---|---|---|---|---|---|---|---|---|---|
| | | | Höchstzulässige Umgebungstemperatur in °C bei Einsatz in Temperaturklasse | | | | | | | | | | | |
| | | | T6 | T5 | T4-T1 | T6 | T5 | T4-T1 | T6 | T5 | T4-T1 | T6 | T5 | T4-T1 |
| NCB1,5...M...N0... | 90 | 100 | 74 | 89 | 100 | 69 | 84 | 100 | 51 | 66 | 85 | 39 | 54 | 67 |
| NCB2-12GK...-N0... | 90 | 100 | 73 | 88 | 100 | 69 | 84 | 100 | 51 | 66 | 80 | 39 | 54 | 61 |
| NCB2-12GM...-N0... | 90 | 100 | 76 | 91 | 100 | 73 | 88 | 100 | 62 | 77 | 81 | 54 | 63 | 63 |
| NCN4-12GK...-N0... | 95 | 100 | 73 | 88 | 100 | 69 | 84 | 100 | 51 | 66 | 80 | 39 | 54 | 61 |
| NCN4-12GM...-N0... | 95 | 100 | 76 | 91 | 100 | 73 | 88 | 100 | 62 | 77 | 81 | 54 | 63 | 63 |
| NCB5-18GK...-N0... | 95 | 100 | 73 | 88 | 100 | 69 | 84 | 100 | 51 | 66 | 80 | 39 | 54 | 61 |
| NCB5-18GM...-N0... | 95 | 100 | 76 | 91 | 100 | 73 | 88 | 100 | 62 | 77 | 81 | 54 | 63 | 63 |
| NCN8-18GK...-N0... | 95 | 100 | 73 | 88 | 100 | 69 | 84 | 100 | 51 | 66 | 80 | 39 | 54 | 61 |
| NCN8-18GM...-N0... | 95 | 100 | 76 | 91 | 100 | 73 | 88 | 100 | 62 | 77 | 81 | 54 | 63 | 63 |
| NCB10-30GK..-N0... | 105 | 100 | 73 | 88 | 100 | 69 | 84 | 100 | 51 | 66 | 80 | 39 | 54 | 61 |
| NCB10-30GM..-N0... | 105 | 100 | 76 | 91 | 100 | 73 | 88 | 100 | 62 | 77 | 81 | 54 | 63 | 63 |
| NCN15-30GK...-N0... | 110 | 100 | 73 | 88 | 100 | 69 | 84 | 100 | 51 | 66 | 80 | 39 | 54 | 61 |
| NCN15-30GM...-N0... | 110 | 100 | 76 | 91 | 100 | 73 | 88 | 100 | 62 | 77 | 81 | 54 | 63 | 63 |
| NJ 0,2-10GM-N... | 20 | 50 | 73 | 88 | 100 | 68 | 83 | 100 | 49 | 64 | 67 | 36 | 42 | 42 |
| NJ 0,8-4,5-N... | 30 | 50 | 73 | 88 | 100 | 68 | 83 | 100 | 49 | 64 | 67 | 36 | 42 | 42 |
| NJ 0,8-5GM-N... | 30 | 50 | 73 | 88 | 100 | 68 | 83 | 100 | 49 | 64 | 67 | 36 | 42 | 42 |
| NJ 1,5-6,5...-N... | 30 | 50 | 73 | 88 | 100 | 68 | 83 | 100 | 49 | 64 | 67 | 36 | 42 | 42 |
| NJ 1,5-10GM-N-Y... | 20 | 50 | 73 | 88 | 100 | 68 | 83 | 100 | 49 | 64 | 67 | 36 | 42 | 42 |
| NJ 1,5-8GM-N... | 30 | 50 | 73 | 88 | 100 | 68 | 83 | 100 | 49 | 64 | 67 | 36 | 42 | 42 |
| NJ 1,5-8-N... | 20 | 50 | 73 | 88 | 100 | 68 | 83 | 100 | 49 | 64 | 67 | 36 | 42 | 42 |
| NJ 1,5-18GM-N-D... | 50 | 60 | 76 | 91 | 100 | 73 | 88 | 100 | 62 | 77 | 81 | 54 | 63 | 63 |
| NJ 2-11-N... | 45 | 50 | 73 | 88 | 100 | 66 | 81 | 100 | 45 | 60 | 89 | 30 | 45 | 74 |
| NJ 2-11-N-G... | 30 | 50 | 76 | 91 | 100 | 73 | 88 | 100 | 62 | 77 | 81 | 54 | 63 | 63 |
| NJ 2-12GK-N... | 45 | 50 | 73 | 88 | 100 | 69 | 84 | 100 | 51 | 66 | 80 | 39 | 54 | 61 |
| NJ 2-12GM-N... | 30 | 50 | 76 | 91 | 100 | 73 | 88 | 100 | 62 | 77 | 81 | 54 | 63 | 63 |
| NJ 2-14GM-N... | 30 | 50 | 76 | 91 | 100 | 73 | 88 | 100 | 62 | 77 | 81 | 54 | 63 | 63 |
| NJ 2,5-14GM-N... | 30 | 50 | 76 | 91 | 100 | 73 | 88 | 100 | 62 | 77 | 81 | 54 | 63 | 63 |
| NJ 4-12GK-N... | 45 | 50 | 73 | 88 | 100 | 69 | 84 | 100 | 51 | 66 | 80 | 39 | 54 | 61 |
| NJ 4-14GK-N... | 45 | 50 | 73 | 88 | 100 | 69 | 84 | 100 | 51 | 66 | 80 | 39 | 54 | 61 |
| NJ 4-12GM-N... | 45 | 50 | 73 | 88 | 100 | 68 | 83 | 100 | 49 | 64 | 67 | 36 | 42 | 42 |
| NJ 4-30GM-N-200... | 70 | 100 | 73 | 88 | 100 | 66 | 81 | 100 | 45 | 60 | 89 | 30 | 45 | 74 |
| NJ 5-10-11-N... | 70 | 100 | 73 | 88 | 100 | 66 | 81 | 100 | 45 | 60 | 78 | 30 | 45 | 57 |
| NJ 5-11-N... | 45 | 50 | 72 | 87 | 100 | 65 | 80 | 100 | 42 | 57 | 82 | 26 | 41 | 63 |
| NJ 5-18GK-N... | 70 | 50 | 73 | 88 | 100 | 69 | 84 | 100 | 51 | 66 | 80 | 39 | 54 | 61 |
| NJ 5-18GM-N... | 70 | 50 | 76 | 91 | 100 | 73 | 88 | 100 | 62 | 77 | 81 | 54 | 63 | 63 |
| NJ 6-22-N... | 130 | 100 | 73 | 88 | 100 | 69 | 84 | 100 | 51 | 66 | 80 | 39 | 54 | 61 |
| NJ 8-18GK-N... | 70 | 50 | 73 | 88 | 100 | 69 | 84 | 100 | 51 | 66 | 80 | 39 | 54 | 61 |



EG-Baumusterprüfbescheinigungen ohne Unterschrift und ohne Siegel haben keine Gültigkeit.
Diese EG-Baumusterprüfbescheinigung darf nur unverändert weiterverbreitet werden.
Auszüge oder Änderungen bedürfen der Genehmigung der Physikalisch-Technischen Bundesanstalt.

Physikalisch-Technische Bundesanstalt • Bundesallee 100 • D-38116 Braunschweig

| Typen | $C_i$ [nF] | $L_i$ [µH] | Typ 1 | | | Typ 2 | | | Typ 3 | | | Typ 4 | | |
|---|---|---|---|---|---|---|---|---|---|---|---|---|---|---|
| | | | Höchstzulässige Umgebungstemperatur in °C bei Einsatz in Temperaturklasse | | | | | | | | | | | |
| | | | T6 | T5 | T4-T1 | T6 | T5 | T4-T1 | T6 | T5 | T4-T1 | T6 | T5 | T4-T1 |
| NJ 8-18GM-N... | 70 | 50 | 76 | 91 | 100 | 73 | 88 | 100 | 62 | 77 | 81 | 54 | 63 | 63 |
| NJ 10-22-N... | 130 | 100 | 73 | 88 | 100 | 69 | 84 | 100 | 51 | 66 | 80 | 39 | 54 | 61 |
| NJ 10-30GK...-N... | 140 | 100 | 73 | 88 | 100 | 69 | 84 | 100 | 51 | 66 | 80 | 39 | 54 | 61 |
| NJ 10-30GM-N... | 140 | 100 | 76 | 91 | 100 | 73 | 88 | 100 | 62 | 77 | 81 | 54 | 63 | 63 |
| NJ 15-30GK...-N... | 140 | 100 | 73 | 88 | 100 | 69 | 84 | 100 | 51 | 66 | 80 | 39 | 54 | 61 |
| NJ 15-30GM-N... | 140 | 100 | 76 | 91 | 100 | 73 | 88 | 100 | 62 | 77 | 81 | 54 | 63 | 63 |
| NJ 25-50-N... | 150 | 140 | 73 | 88 | 100 | 69 | 84 | 100 | 51 | 66 | 80 | 39 | 54 | 61 |
| NJ 20-40-N... | 140 | 140 | 73 | 88 | 100 | 69 | 84 | 100 | 51 | 66 | 80 | 39 | 54 | 61 |

(16) Prüfbericht PTB Ex 00-29206

(17) Besondere Bedingungen

1. Beim Einsatz der zylinderförmigen induktiven Sensoren Typen NC... und NJ... im Temperaturbereich von -60°C bis -20 °C sind diese durch Einbau in ein zusätzliches Gehäuse vor Schlageinwirkung zu schützen.
2. Die Anschlußteile der zylinderförmigen induktiven Sensoren Typen NC... und NJ... sind so zu errichten, daß mindestens die Schutzart IP20 gemäß IEC-Publikation 60529:1989 erreicht wird.
3. Der Zusammenhang zwischen dem Typ des angeschlossenen Stromkreises, der höchstzulässigen Umgebungstemperatur und der Temperaturklasse sowie den wirksamen inneren Reaktanzen für die einzelnen Typen der zylinderförmigen induktiven Sensoren ist der Tabelle unter Punkt (15) dieser EG-Baumusterprüfbescheinigung zu entnehmen.
4. Bei den folgenden Typen der zylinderförmigen induktiven Sensoren ist die unzulässige elektrostatische Aufladung der Metallgehäuseteile zu vermeiden. Gefährliche elektrostatische Aufladungen der Metallgehäuseteile können durch Erdung dieser Metallgehäuseteile vermieden werden, wobei sehr kleine Metallgehäuseteile (z.B. Schrauben) nicht geerdet werden müssen:

| | | |
|---|---|---|
| NCB1,5...M...N0... | NJ 1,5-6,5...-N... | NJ 4-30GM-N-200... |
| NCB2-12GM...-N0... | NJ 1,5-10GM-N-Y... | NJ 5-11-N-545... |
| NCN4-12GM...-N0... | NJ 1,5-8GM-N... | NJ 5-11-N-G... |
| NCB5-18GM...-N0... | NJ 1,5-8-N... | NJ 5-18GM-N... |
| NCN8-18GM...-N0... | NJ 1,5-18GM-N-D... | NJ 6-22-N-G... |
| NCB10-30GM..-N0... | NJ 2-11-N-G... | NJ 8-18GM-N... |



EG-Baumusterprüfbescheinigungen ohne Unterschrift und ohne Siegel haben keine Gültigkeit.
Diese EG-Baumusterprüfbescheinigung darf nur unverändert weiterverbreitet werden.
Auszüge oder Änderungen bedürfen der Genehmigung der Physikalisch-Technischen Bundesanstalt.

Physikalisch-Technische Bundesanstalt • Bundesallee 100 • D-38116 Braunschweig

| | | |
|---|---|---|
| NCN15-30GM...-N0... | NJ 2-12GM-N... | NJ 10-22-N-G... |
| NJ 0,2-10GM-N... | NJ 2-14GM-N... | NJ 10-30GM-N... |
| NJ 0,8-4,5-N... | NJ 2,5-14GM-N... | |
| NJ 0,8-5GM-N... | NJ 4-12GM-N... | |

(18) Grundlegende Sicherheits- und Gesundheitsanforderungen

Durch vorgenannte Normen abgedeckt.

Zertifizierungsstelle Explosionsschutz
Im Auftrag

Dr.-Ing. U. Johannsmeyer
Regierungsdirektor

Braunschweig, 26. September 2000



EG-Baumusterprüfbescheinigungen ohne Unterschrift und ohne Siegel haben keine Gültigkeit.
Diese EG-Baumusterprüfbescheinigung darf nur unverändert weiterverbreitet werden.
Auszüge oder Änderungen bedürfen der Genehmigung der Physikalisch-Technischen Bundesanstalt.

Physikalisch-Technische Bundesanstalt • Bundesallee 100 • D-38116 Braunschweig

# Physikalisch-Technische Bundesanstalt

**Braunschweig und Berlin**

## 1. ERGÄNZUNG

**gemäß Richtlinie 94/9/EG Anhang III Ziffer 6**

## zur EG-Baumusterprüfbescheinigung PTB 00 ATEX 2048 X

Gerät: Zylinderförmige induktive Sensoren Typen NC... und NJ...

Kennzeichnung: **II 2 G EEx ia IIC T6**

Hersteller: Pepperl + Fuchs GmbH

Anschrift: Königsberger Allee 87
68307 Mannheim; Deutschland

Beschreibung der Ergänzungen und Änderungen

Die nachfolgend aufgeführten zylinderförmigen induktiven Sensoren der Typenreihe NC... und NJ... dürfen zukünftig auch in explosionsgefährdeten Bereichen eingesetzt werden, die den Einsatz von Kategorie 1-Geräten erfordern.

Die Änderungen betreffen ausschließlich die "Elektrischen Daten" (geänderte höchstzulässige Umgebungstemperaturen für den Einsatz als Kategorie 1-Gerät, Reduzierung des eigensicheren Auswerte- und Versorgungsstromkreises auf die Kategorie ia) sowie die Kennzeichnung der nachfolgend aufgeführten Typen der zylinderförmigen induktiven Sensoren.

| | | |
|---|---|---|
| NCB1,5...M...N0... | NCN15-30GM...-N0... | NJ 2-12GM-N... |
| NCB2-12GM...-N0... | NJ 0,8-5GM-N... | NJ 4-12GM-N... |
| NCN4-12GM...-N0.... | NJ 1,5-6,5...-N... | NJ 5-18GM-N... |
| NCB5-18GM...-N0... | NJ 1,5-8GM-N... | NJ 8-18GM-N... |
| NCN8-18GM...-N0... | NJ 2-11-N... | NJ 10-30GM-N... |
| NCB10-30GM..-N0... | NJ 2-11-N-G... | NJ 15-30GM-N... |

Die Kennzeichnung der oben aufgeführten Sensoren lautet für den Einsatz als Kategorie 1-Gerät zukünftig:

**II 1 G EEx ia IIC T6**

Die "Besonderen Bedingungen" gelten unverändert auch für den Einsatz als Kategorie 1-Gerät.



EG-Baumusterprüfbescheinigungen ohne Unterschrift und ohne Siegel haben keine Gültigkeit.
Diese EG-Baumusterprüfbescheinigung darf nur unverändert weiterverbreitet werden.
Auszüge oder Änderungen bedürfen der Genehmigung der Physikalisch-Technischen Bundesanstalt.

Physikalisch-Technische Bundesanstalt • Bundesallee 100 • D-38116 Braunschweig

# Physikalisch-Technische Bundesanstalt

**Braunschweig und Berlin**

## 1. Ergänzung zur EG-Baumusterprüfbescheinigung PTB 00 ATEX 2048 X

Elektrische Daten

Auswerte- und Versorgungsstromkreis ..... in Zündschutzart Eigensicherheit EEx ia IIC/IIB
nur zum Anschluß an bescheinigte eigensichere Stromkreise
Höchstwerte:

| Typ 1 | Typ 2 | Typ 3 | Typ 4 |
|---|---|---|---|
| $U_i$ = 16 V | $U_i$ = 16 V | $U_i$ = 16 V | $U_i$ = 16 V |
| $I_i$ = 25 mA | $I_i$ = 25 mA | $I_i$ = 52 mA | $I_i$ = 76 mA |
| $P_i$ = 34 mW | $P_i$ = 64 mW | $P_i$ = 169 mW | $P_i$ = 242 mW |

Der Zusammenhang zwischen dem Typ des angeschlossenen Stromkreises, der höchstzulässigen Umgebungstemperatur für den Einsatz als Kategorie 1-Gerät und der Temperaturklasse sowie den wirksamen inneren Reaktanzen für die einzelnen Typen der zylinderförmigen induktiven Sensoren ist der nachfolgenden Tabelle zu entnehmen:

| Typen | $C_i$ | $L_i$ | Typ 1 | | | Typ 2 | | | Typ 3 | | | Typ 4 | | |
|---|---|---|---|---|---|---|---|---|---|---|---|---|---|---|
| | | | Höchstzulässige Umgebungstemperatur in °C bei Einsatz in Temperaturklasse | | | | | | | | | | | |
| | [nF] | [µH] | T6 | T5 | T4-T1 | T6 | T5 | T4-T1 | T6 | T5 | T4-T1 | T6 | T5 | T4-T1 |
| NCB1,5...M...N0... | 90 | 100 | 57 | 69 | 97 | 52 | 64 | 92 | 34 | 46 | 74 | 22 | 34 | 62 |
| NCB2-12GM...-N0... | 90 | 100 | 59 | 71 | 99 | 56 | 68 | 96 | 45 | 57 | 81 | 37 | 49 | 63 |
| NCN4-12GM...-N0... | 95 | 100 | 59 | 71 | 99 | 56 | 68 | 96 | 45 | 57 | 81 | 37 | 49 | 63 |
| NCB5-18GM...-N0... | 95 | 100 | 59 | 71 | 99 | 56 | 68 | 96 | 45 | 57 | 81 | 37 | 49 | 63 |
| NCN8-18GM...-N0... | 95 | 100 | 59 | 71 | 99 | 56 | 68 | 96 | 45 | 57 | 81 | 37 | 49 | 63 |
| NCB10-30GM..-N0... | 105 | 100 | 59 | 71 | 99 | 56 | 68 | 96 | 45 | 57 | 81 | 37 | 49 | 63 |
| NCN15-30GM...-N0... | 110 | 100 | 59 | 71 | 99 | 56 | 68 | 96 | 45 | 57 | 81 | 37 | 49 | 63 |
| NJ 0,8-5GM-N... | 30 | 50 | 56 | 68 | 96 | 51 | 63 | 91 | 32 | 44 | 67 | 19 | 31 | 41 |
| NJ 1,5-6,5...-N... | 30 | 50 | 56 | 68 | 96 | 51 | 63 | 91 | 32 | 44 | 67 | 19 | 31 | 41 |
| NJ 1,5-10GM-N-Y... | 30 | 50 | 56 | 68 | 96 | 51 | 63 | 91 | 32 | 44 | 67 | 19 | 31 | 41 |
| NJ 2-11-N... | 45 | 50 | 55 | 67 | 95 | 49 | 61 | 89 | 28 | 40 | 68 | 13 | 25 | 53 |
| NJ 2-11-N-G... | 30 | 50 | 59 | 71 | 99 | 56 | 68 | 96 | 45 | 57 | 81 | 37 | 49 | 63 |
| NJ 2-12GM-N... | 30 | 50 | 59 | 71 | 99 | 56 | 68 | 96 | 45 | 57 | 81 | 37 | 49 | 63 |
| NJ 4-12GM-N... | 45 | 50 | 56 | 68 | 96 | 51 | 63 | 91 | 32 | 44 | 67 | 19 | 31 | 41 |
| NJ 5-18GM-N... | 70 | 50 | 59 | 71 | 99 | 56 | 68 | 96 | 45 | 57 | 81 | 37 | 49 | 63 |
| NJ 8-18GM-N... | 70 | 50 | 59 | 71 | 99 | 56 | 68 | 96 | 45 | 57 | 81 | 37 | 49 | 63 |
| NJ 10-30GM-N... | 140 | 100 | 59 | 71 | 99 | 56 | 68 | 96 | 45 | 57 | 81 | 37 | 49 | 63 |
| NJ 15-30GM-N... | 140 | 100 | 59 | 71 | 99 | 56 | 68 | 96 | 45 | 57 | 81 | 37 | 49 | 63 |



EG-Baumusterprüfbescheinigungen ohne Unterschrift und ohne Siegel haben keine Gültigkeit.
Diese EG-Baumusterprüfbescheinigung darf nur unverändert weiterverbreitet werden.
Auszüge oder Änderungen bedürfen der Genehmigung der Physikalisch-Technischen Bundesanstalt.

Physikalisch-Technische Bundesanstalt • Bundesallee 100 • D-38116 Braunschweig

# Physikalisch-Technische Bundesanstalt

**Braunschweig und Berlin**

## 1. Ergänzung zur EG-Baumusterprüfbescheinigung PTB 00 ATEX 2048 X

Prüfbericht: PTB Ex 02-22170

Zertifizierungsstelle Explosionsschutz
Im Auftrag

Dr.-Ing. U. Johannsmeyer
Regierungsdirektor

Braunschweig, 29. August 2002



EG-Baumusterprüfbescheinigungen ohne Unterschrift und ohne Siegel haben keine Gültigkeit.
Diese EG-Baumusterprüfbescheinigung darf nur unverändert weiterverbreitet werden.
Auszüge oder Änderungen bedürfen der Genehmigung der Physikalisch-Technischen Bundesanstalt.

Physikalisch-Technische Bundesanstalt • Bundesallee 100 • D-38116 Braunschweig

# Physikalisch-Technische Bundesanstalt

**Braunschweig und Berlin**

## 2. E R G Ä N Z U N G

**gemäß Richtlinie 94/9/EG Anhang III Ziffer 6**

## zur EG-Baumusterprüfbescheinigung PTB 00 ATEX 2048 X

Gerät: Zylinderförmige induktive Sensoren Typen NC... und NJ...

Kennzeichnung: Ⓔx **II 1 G EEx ia IIC T6**

Hersteller: Pepperl + Fuchs GmbH

Anschrift: Königsberger Allee 87
68307 Mannheim; Deutschland

Beschreibung der Ergänzungen und Änderungen

Die zylinderförmigen induktiven Sensoren der Typenreihe NC... und NJ... dürfen zukünftig auch wie in den Prüfungsunterlagen zum Prüfbericht PTB Ex 04-23445 beschrieben gefertigt und betrieben werden.

Die Änderungen betreffen die Erweiterung der Typenreihe NJ (neue Typen und weitere Typen im Einsatz als Kategorie 1-Geräte), die Darstellung des Grundaufbaus des zylinderförmigen induktiven Sensors Typ NJ 4-30GM-N-200... mit getrennten Gehäusen für Oszillator- und Verstärkerteil, den inneren Aufbau (weitere Schaltplanbeispiele, neue LED-Typen), die Erweiterung von Punkt 4 der „Besonderen Bedingungen" um den Typ NJ 15-30GM-N... sowie weitere Alternativen für die Aufbringung der Kennzeichnung.

Die EG-Baumusterprüfbescheinigung wird um folgende Typen der zylinderförmigen induktiven Sensoren erweitert:

NJ 5-18GK-N-150...
NJ 8-18GK-N-150...
NJ 15-30GK-N-150...

Für folgende Typen der zylinderförmigen induktiven Sensoren werden die Einsatzbedingungen als Kategorie 1-Gerät mit dieser 2. Ergänzung neu festgelegt.

NJ 1,5-10GM-N-Y...
NJ 1,5-8GM-N...
NJ 1,5-18GM-N-D...
NJ 4-30GM-N-200...
NJ 5-18GK-N...
NJ 5-18GK-N-150...
NJ 8-18GK-N...
NJ 8-18GK-N-150...
NJ 15-30GK-N...
NJ 15-30GK-N-150...



EG-Baumusterprüfbescheinigungen ohne Unterschrift und ohne Siegel haben keine Gültigkeit.
Diese EG-Baumusterprüfbescheinigung darf nur unverändert weiterverbreitet werden.
Auszüge oder Änderungen bedürfen der Genehmigung der Physikalisch-Technischen Bundesanstalt.

Physikalisch-Technische Bundesanstalt • Bundesallee 100 • D-38116 Braunschweig

# Physikalisch-Technische Bundesanstalt

**Braunschweig und Berlin**

## 2. Ergänzung zur EG-Baumusterprüfbescheinigung PTB 00 ATEX 2048 X

Zur besseren Verständlichkeit werden die „Elektrischen Daten" sowie die Tabellen, welche die Zusammenhänge zwischen den höchstzulässigen Umgebungstemperaturen, den Temperaturklassen, den „Elektrischen Daten" sowie den Gerätekategorien herstellen, für alle Typen der zylindrischen induktiven Sensoren nachfolgend dargestellt.

Desweiteren werden die geänderten „Besonderen Bedingungen" dargestellt.

Elektrische Daten

Auswerte- und
Versorgungsstromkreis ..... in Zündschutzart Eigensicherheit EEx ia IIC/IIB
bzw. EEx ib IIC/IIB
nur zum Anschluss an bescheinigte eigensichere Stromkreise
Höchstwerte:

| Typ 1 | Typ 2 | Typ 3 | Typ 4 |
|---|---|---|---|
| $U_i$ = 16 V | $U_i$ = 16 V | $U_i$ = 16 V | $U_i$ = 16 V |
| $I_i$ = 25 mA | $I_i$ = 25 mA | $I_i$ = 52 mA | $I_i$ = 76 mA |
| $P_i$ = 34 mW | $P_i$ = 64 mW | $P_i$ = 169 mW | $P_i$ = 242 mW |

Beim Einsatz als Kategorie 1-Gerät ist zu beachten, dass der Auswerte- und Versorgungsstromkreis der Zündschutzart Eigensicherheit EEx ia IIC/IIB entsprechen muss.

Die Zusammenhänge zwischen dem Typ des angeschlossenen Stromkreises, der höchstzulässigen Umgebungstemperatur für den Einsatz als Kategorie 1- bzw. Kategorie 2-Gerät und der Temperaturklasse sowie den wirksamen inneren Reaktanzen für die einzelnen Typen der zylinderförmigen induktiven Sensoren sind den nachfolgenden Tabellen zu entnehmen.



EG-Baumusterprüfbescheinigungen ohne Unterschrift und ohne Siegel haben keine Gültigkeit.
Diese EG-Baumusterprüfbescheinigung darf nur unverändert weiterverbreitet werden.
Auszüge oder Änderungen bedürfen der Genehmigung der Physikalisch-Technischen Bundesanstalt.

Physikalisch-Technische Bundesanstalt • Bundesallee 100 • D-38116 Braunschweig

Tabelle 1: Einsatz als Kategorie 1-Gerät

| Typ | Ci/ nF | Li/ µH | Typ 1 T6 | T5 | T4 | T3 | T2-T1 | Typ 2 T6 | T5 | T4 | T3 | T2-T1 | Typ 3 T6 | T5 | T4 | T3 | T2-T1 | Typ 4 T6 | T5 | T4 | T3 | T2-T1 |
|---|---|---|---|---|---|---|---|---|---|---|---|---|---|---|---|---|---|---|---|---|---|---|
| NCB1,5-...M...N0... | 90 | 100 | 57 | 69 | 97 | 97 | 97 | 52 | 64 | 92 | 92 | 92 | 34 | 46 | 74 | 74 | 74 | 22 | 34 | 62 | 62 | 62 |
| NCB2-12GM...-N0... | 90 | 100 | 59 | 71 | 99 | 99 | 99 | 56 | 68 | 96 | 96 | 96 | 45 | 57 | 81 | 81 | 81 | 37 | 49 | 63 | 63 | 63 |
| NCN4-12GM...-N0... | 95 | 100 | 59 | 71 | 99 | 99 | 99 | 56 | 68 | 96 | 96 | 96 | 45 | 57 | 81 | 81 | 81 | 37 | 49 | 63 | 63 | 63 |
| NCB5-18GM...-N0... | 95 | 100 | 59 | 71 | 99 | 99 | 99 | 56 | 68 | 96 | 96 | 96 | 45 | 57 | 81 | 81 | 81 | 37 | 49 | 63 | 63 | 63 |
| NCN8-18GM...-N0... | 95 | 100 | 59 | 71 | 99 | 99 | 99 | 56 | 68 | 96 | 96 | 96 | 45 | 57 | 81 | 81 | 81 | 37 | 49 | 63 | 63 | 63 |
| NCB10-30GM...-N0... | 105 | 100 | 59 | 71 | 99 | 99 | 99 | 56 | 68 | 96 | 96 | 96 | 45 | 57 | 81 | 81 | 81 | 37 | 49 | 63 | 63 | 63 |
| NCN15-30GM...-N0... | 110 | 100 | 59 | 71 | 99 | 99 | 99 | 56 | 68 | 96 | 96 | 96 | 45 | 57 | 81 | 81 | 81 | 37 | 49 | 63 | 63 | 63 |
| NJ 0,8-5GM-N... | 30 | 50 | 56 | 68 | 96 | 96 | 96 | 51 | 63 | 91 | 91 | 91 | 32 | 44 | 67 | 67 | 67 | 19 | 31 | 41 | 41 | 41 |
| NJ 1,5-6,5...-N... | 30 | 50 | 56 | 68 | 96 | 96 | 96 | 51 | 63 | 91 | 91 | 91 | 32 | 44 | 67 | 67 | 67 | 19 | 31 | 41 | 41 | 41 |
| NJ 1,5-8GM-N... | 30 | 50 | 56 | 68 | 96 | 96 | 96 | 51 | 63 | 91 | 91 | 91 | 32 | 44 | 67 | 67 | 67 | 19 | 31 | 41 | 41 | 41 |
| NJ 1,5-10GM-N-Y... | 20 | 50 | 56 | 68 | 96 | 96 | 96 | 51 | 63 | 91 | 91 | 91 | 32 | 44 | 67 | 67 | 67 | 19 | 31 | 41 | 41 | 41 |
| NJ 1,5-18GM-N-D... | 50 | 60 | 59 | 71 | 99 | 99 | 99 | 56 | 68 | 96 | 96 | 96 | 45 | 57 | 81 | 81 | 81 | 37 | 49 | 63 | 63 | 63 |
| NJ 2-11-N... | 45 | 50 | 55 | 67 | 95 | 95 | 95 | 49 | 61 | 89 | 89 | 89 | 28 | 40 | 68 | 68 | 68 | 13 | 25 | 53 | 53 | 53 |
| NJ 2-11-N-G... | 30 | 50 | 59 | 71 | 99 | 99 | 99 | 56 | 68 | 96 | 96 | 96 | 45 | 57 | 81 | 81 | 81 | 37 | 49 | 63 | 63 | 63 |
| NJ 2-12GM-N... | 30 | 50 | 59 | 71 | 99 | 99 | 99 | 56 | 68 | 96 | 96 | 96 | 45 | 57 | 81 | 81 | 81 | 37 | 49 | 63 | 63 | 63 |
| NJ 4-30GM-N-200... (Oszillatorteil) | 70 | 100 | 56 | 68 | 96 | 148 | 192 | 49 | 61 | 89 | 141 | 186 | 28 | 40 | 68 | 120 | 164 | 13 | 25 | 53 | 105 | 149 |
| NJ 4-30GM-N-200... (Verstärkerteil) | | | 56 | 68 | 96 | 96 | 96 | 49 | 61 | 89 | 89 | 89 | 28 | 40 | 68 | 68 | 68 | 13 | 25 | 53 | 53 | 53 |
| NJ 4-12GM-N... | 45 | 50 | 56 | 68 | 96 | 96 | 96 | 51 | 63 | 91 | 91 | 91 | 32 | 44 | 67 | 67 | 67 | 19 | 31 | 41 | 41 | 41 |
| NJ 5-18GM-N... | 70 | 50 | 59 | 71 | 99 | 99 | 99 | 56 | 68 | 96 | 96 | 96 | 45 | 57 | 81 | 81 | 81 | 37 | 49 | 63 | 63 | 63 |
| NJ 5-18GK-N... | 70 | 50 | 57 | 69 | 97 | 97 | 97 | 52 | 64 | 92 | 92 | 92 | 34 | 46 | 74 | 74 | 74 | 22 | 34 | 61 | 61 | 61 |
| NJ 5-18GK-N-150... | 70 | 50 | 57 | 69 | 97 | 149 | 150 | 52 | 64 | 92 | 144 | 150 | 34 | 46 | 74 | 126 | 150 | 22 | 34 | 61 | 114 | 136 |
| NJ 8-18GK-N... | 70 | 50 | 57 | 69 | 97 | 97 | 97 | 52 | 64 | 92 | 92 | 92 | 34 | 46 | 74 | 74 | 74 | 22 | 34 | 61 | 61 | 61 |
| NJ 8-18GK-N-150... | 70 | 50 | 57 | 69 | 97 | 149 | 150 | 52 | 64 | 92 | 144 | 150 | 34 | 46 | 74 | 126 | 150 | 22 | 34 | 61 | 114 | 136 |
| NJ 8-18GM-N... | 70 | 50 | 59 | 71 | 99 | 99 | 99 | 56 | 68 | 96 | 96 | 96 | 45 | 57 | 81 | 81 | 81 | 37 | 49 | 63 | 63 | 63 |
| NJ 10-30GM-N... | 140 | 100 | 59 | 71 | 99 | 99 | 99 | 56 | 68 | 96 | 96 | 96 | 45 | 57 | 81 | 81 | 81 | 37 | 49 | 63 | 63 | 63 |
| NJ 15-30GK-N... | 140 | 100 | 57 | 69 | 97 | 97 | 97 | 52 | 64 | 92 | 92 | 92 | 34 | 46 | 74 | 74 | 74 | 22 | 34 | 61 | 61 | 61 |
| NJ 15-30GK-N-150... | 140 | 100 | 57 | 69 | 97 | 149 | 150 | 52 | 64 | 92 | 144 | 150 | 34 | 46 | 74 | 126 | 150 | 22 | 34 | 61 | 114 | 136 |
| NJ 15-30GM-N... | 140 | 100 | 59 | 71 | 99 | 99 | 99 | 56 | 68 | 96 | 96 | 96 | 45 | 57 | 81 | 81 | 81 | 37 | 49 | 63 | 63 | 63 |




EG-Baumusterprüfbescheinigungen ohne Unterschrift und ohne Siegel haben keine Gültigkeit.
Diese EG-Baumusterprüfbescheinigung darf nur unverändert weiterverbreitet werden.
Auszüge oder Änderungen bedürfen der Genehmigung der Physikalisch-Technischen Bundesanstalt.

Physikalisch-Technische Bundesanstalt • Bundesallee 100 • D-38116 Braunschweig

Tabelle 2: Einsatz als Kategorie 2-Gerät

| Typ | Ci/ nF | Li/ µH | Typ 1 | | | | | Typ 2 | | | | | Typ 3 | | | | | Typ 4 | | | | |
|---|---|---|---|---|---|---|---|---|---|---|---|---|---|---|---|---|---|---|---|---|---|---|
| | | | T6 | T5 | T4 | T3 | T2-T1 | T6 | T5 | T4 | T3 | T2-T1 | T6 | T5 | T4 | T3 | T2-T1 | T6 | T5 | T4 | T3 | T2-T1 |
| NCB1,5...M...N0... | 90 | 100 | 74 | 89 | 100 | 100 | 100 | 69 | 84 | 100 | 100 | 100 | 51 | 66 | 85 | 85 | 85 | 39 | 54 | 67 | 67 | 67 |
| NCB2-12GK...-N0... | 90 | 100 | 73 | 88 | 100 | 100 | 100 | 69 | 84 | 100 | 100 | 100 | 51 | 66 | 80 | 80 | 80 | 39 | 54 | 61 | 61 | 61 |
| NCB2-12GM...-N0... | 90 | 100 | 76 | 91 | 100 | 100 | 100 | 73 | 88 | 100 | 100 | 100 | 62 | 77 | 81 | 81 | 81 | 54 | 63 | 63 | 63 | 63 |
| NCN4-12GK...-N0... | 95 | 100 | 73 | 88 | 100 | 100 | 100 | 69 | 84 | 100 | 100 | 100 | 51 | 66 | 80 | 80 | 80 | 39 | 54 | 61 | 61 | 61 |
| NCN4-12GM...-N0... | 95 | 100 | 76 | 91 | 100 | 100 | 100 | 73 | 88 | 100 | 100 | 100 | 62 | 77 | 81 | 81 | 81 | 54 | 63 | 63 | 63 | 63 |
| NCB5-18GK...-N0... | 95 | 100 | 73 | 88 | 100 | 100 | 100 | 69 | 84 | 100 | 100 | 100 | 51 | 66 | 80 | 80 | 80 | 39 | 54 | 61 | 61 | 61 |
| NCB5-18GM...-N0... | 95 | 100 | 76 | 91 | 100 | 100 | 100 | 73 | 88 | 100 | 100 | 100 | 62 | 77 | 81 | 81 | 81 | 54 | 63 | 63 | 63 | 63 |
| NCN8-18GK...-N0... | 95 | 100 | 73 | 88 | 100 | 100 | 100 | 69 | 84 | 100 | 100 | 100 | 51 | 66 | 80 | 80 | 80 | 39 | 54 | 61 | 61 | 61 |
| NCN8-18GM...-N0... | 95 | 100 | 76 | 91 | 100 | 100 | 100 | 73 | 88 | 100 | 100 | 100 | 62 | 77 | 81 | 81 | 81 | 54 | 63 | 63 | 63 | 63 |
| NCB10-30GK..-N0... | 105 | 100 | 73 | 88 | 100 | 100 | 100 | 69 | 84 | 100 | 100 | 100 | 51 | 66 | 80 | 80 | 80 | 39 | 54 | 61 | 61 | 61 |
| NCB10-30GM..-N0... | 105 | 100 | 76 | 91 | 100 | 100 | 100 | 73 | 88 | 100 | 100 | 100 | 62 | 77 | 81 | 81 | 81 | 54 | 63 | 63 | 63 | 63 |
| NCN15-30GK...-N0... | 110 | 100 | 73 | 88 | 100 | 100 | 100 | 69 | 84 | 100 | 100 | 100 | 51 | 66 | 80 | 80 | 80 | 39 | 54 | 61 | 61 | 61 |
| NCN15-30GM...-N0... | 110 | 100 | 76 | 91 | 100 | 100 | 100 | 73 | 88 | 100 | 100 | 100 | 62 | 77 | 81 | 81 | 81 | 54 | 63 | 63 | 63 | 63 |
| NJ 0,2-10GM-N... | 20 | 50 | 73 | 88 | 100 | 100 | 100 | 68 | 83 | 100 | 100 | 100 | 49 | 64 | 67 | 67 | 67 | 36 | 42 | 42 | 42 | 42 |
| NJ 0,8-4,5-N... | 30 | 50 | 73 | 88 | 100 | 100 | 100 | 68 | 83 | 100 | 100 | 100 | 49 | 64 | 67 | 67 | 67 | 36 | 42 | 42 | 42 | 42 |
| NJ 0,8-5GM-N... | 30 | 50 | 73 | 88 | 100 | 100 | 100 | 68 | 83 | 100 | 100 | 100 | 49 | 64 | 67 | 67 | 67 | 36 | 42 | 42 | 42 | 42 |
| NJ 1,5-6,5...-N... | 30 | 50 | 73 | 88 | 100 | 100 | 100 | 68 | 83 | 100 | 100 | 100 | 49 | 64 | 67 | 67 | 67 | 36 | 42 | 42 | 42 | 42 |
| NJ 1,5-10GM-N-Y... | 20 | 50 | 73 | 88 | 100 | 100 | 100 | 68 | 83 | 100 | 100 | 100 | 49 | 64 | 67 | 67 | 67 | 36 | 42 | 42 | 42 | 42 |
| NJ 1,5-8GM-N... | 30 | 50 | 73 | 88 | 100 | 100 | 100 | 68 | 83 | 100 | 100 | 100 | 49 | 64 | 67 | 67 | 67 | 36 | 42 | 42 | 42 | 42 |
| NJ 1,5-8-N... | 20 | 50 | 73 | 88 | 100 | 100 | 100 | 68 | 83 | 100 | 100 | 100 | 49 | 64 | 67 | 67 | 67 | 36 | 42 | 42 | 42 | 42 |
| NJ 1,5-18GM-N-D... | 50 | 60 | 76 | 91 | 100 | 100 | 100 | 73 | 88 | 100 | 100 | 100 | 62 | 77 | 81 | 81 | 81 | 54 | 63 | 63 | 63 | 63 |
| NJ 2-11-N... | 45 | 50 | 73 | 88 | 100 | 100 | 100 | 66 | 81 | 100 | 100 | 100 | 45 | 60 | 89 | 89 | 89 | 30 | 45 | 74 | 74 | 74 |
| NJ 2-11-N-G... | 30 | 50 | 76 | 91 | 100 | 100 | 100 | 73 | 88 | 100 | 100 | 100 | 62 | 77 | 81 | 81 | 81 | 54 | 63 | 63 | 63 | 63 |
| NJ 2-12GK-N... | 45 | 50 | 73 | 88 | 100 | 100 | 100 | 69 | 84 | 100 | 100 | 100 | 51 | 66 | 80 | 80 | 80 | 39 | 54 | 61 | 61 | 61 |
| NJ 2-12GM-N... | 30 | 50 | 76 | 91 | 100 | 100 | 100 | 73 | 88 | 100 | 100 | 100 | 62 | 77 | 81 | 81 | 81 | 54 | 63 | 63 | 63 | 63 |
| NJ 2-14GM-N... | 30 | 50 | 76 | 91 | 100 | 100 | 100 | 73 | 88 | 100 | 100 | 100 | 62 | 77 | 81 | 81 | 81 | 54 | 63 | 63 | 63 | 63 |
| NJ 2,5-14GM-N... | 30 | 50 | 76 | 91 | 100 | 100 | 100 | 73 | 88 | 100 | 100 | 100 | 62 | 77 | 81 | 81 | 81 | 54 | 63 | 63 | 63 | 63 |
| NJ 4-12GK-N... | 45 | 50 | 73 | 88 | 100 | 100 | 100 | 69 | 84 | 100 | 100 | 100 | 51 | 66 | 80 | 80 | 80 | 39 | 54 | 61 | 61 | 61 |
| NJ 4-14GK-N... | 45 | 50 | 73 | 88 | 100 | 100 | 100 | 69 | 84 | 100 | 100 | 100 | 51 | 66 | 80 | 80 | 80 | 39 | 54 | 61 | 61 | 61 |
| NJ 4-12GM-N... | 45 | 50 | 73 | 88 | 100 | 100 | 100 | 68 | 83 | 100 | 100 | 100 | 49 | 64 | 67 | 67 | 67 | 36 | 42 | 42 | 42 | 42 |




EG-Baumusterprüfbescheinigungen ohne Unterschrift und ohne Siegel haben keine Gültigkeit.
Diese EG-Baumusterprüfbescheinigung darf nur unverändert weiterverbreitet werden.
Auszüge oder Änderungen bedürfen der Genehmigung der Physikalisch-Technischen Bundesanstalt.

Physikalisch-Technische Bundesanstalt • Bundesallee 100 • D-38116 Braunschweig

## 2. Ergänzung zur EG-Baumusterprüfbescheinigung PTB 00 ATEX 2048 X

Fortsetzung Tabelle 2: Einsatz als Kategorie 2-Gerät

| Typ | Ci/ | Li/ | Typ 1 | | | | | Typ 2 | | | | | Typ 3 | | | | | Typ 4 | | | | |
|---|---|---|---|---|---|---|---|---|---|---|---|---|---|---|---|---|---|---|---|---|---|---|
| | | | T6 | T5 | T4 | T3 | T2-T1 | T6 | T5 | T4 | T3 | T2-T1 | T6 | T5 | T4 | T3 | T2-T1 | T6 | T5 | T4 | T3 | T2-T1 |
| NJ 4-30GM-N-200... (Oszillatorteil) | 70 | 100 | 73 | 88 | 123 | 188 | 192 | 66 | 81 | 116 | 181 | 186 | 45 | 60 | 95 | 160 | 164 | 30 | 45 | 80 | 145 | 149 |
| NJ 4-30GM-N-200... (Verstärkerteil) | | | 73 | 88 | 100 | 100 | 100 | 66 | 81 | 100 | 100 | 100 | 45 | 60 | 89 | 89 | 89 | 30 | 45 | 74 | 74 | 74 |
| NJ 5-10-11-N... | 70 | 100 | 73 | 88 | 100 | 100 | 100 | 66 | 81 | 100 | 100 | 100 | 45 | 60 | 78 | 78 | 78 | 30 | 45 | 57 | 57 | 57 |
| NJ 5-11-N... | 45 | 50 | 72 | 87 | 100 | 100 | 100 | 65 | 80 | 100 | 100 | 100 | 42 | 57 | 82 | 82 | 82 | 26 | 41 | 63 | 63 | 63 |
| NJ 5-18GK-N... | 70 | 50 | 73 | 88 | 100 | 100 | 100 | 69 | 84 | 100 | 100 | 100 | 51 | 66 | 80 | 80 | 80 | 39 | 54 | 61 | 61 | 61 |
| NJ 5-18GK-N-150... | 70 | 50 | 73 | 88 | 124 | 150 | 150 | 69 | 84 | 119 | 150 | 150 | 51 | 66 | 101 | 150 | 150 | 39 | 54 | 89 | 136 | 136 |
| NJ 5-18GM-N... | 70 | 50 | 76 | 91 | 100 | 100 | 100 | 73 | 88 | 100 | 100 | 100 | 62 | 77 | 81 | 81 | 81 | 54 | 63 | 63 | 63 | 63 |
| NJ 6-22-N... | 130 | 100 | 73 | 88 | 100 | 100 | 100 | 69 | 84 | 100 | 100 | 100 | 51 | 66 | 80 | 80 | 80 | 39 | 54 | 61 | 61 | 61 |
| NJ 8-18GK-N... | 70 | 50 | 73 | 88 | 100 | 100 | 100 | 69 | 84 | 100 | 100 | 100 | 51 | 66 | 80 | 80 | 80 | 39 | 54 | 61 | 61 | 61 |
| NJ 8-18GK-N-150... | 70 | 50 | 73 | 88 | 124 | 150 | 150 | 69 | 84 | 119 | 150 | 150 | 51 | 66 | 101 | 150 | 150 | 39 | 54 | 89 | 136 | 136 |
| NJ 8-18GM-N... | 70 | 50 | 76 | 91 | 100 | 100 | 100 | 73 | 88 | 100 | 100 | 100 | 62 | 77 | 81 | 81 | 81 | 54 | 63 | 63 | 63 | 63 |
| NJ 10-22-N... | 130 | 100 | 73 | 88 | 100 | 100 | 100 | 69 | 84 | 100 | 100 | 100 | 51 | 66 | 80 | 80 | 80 | 39 | 54 | 61 | 61 | 61 |
| NJ 10-30GK...-N... | 140 | 100 | 73 | 88 | 100 | 100 | 100 | 69 | 84 | 100 | 100 | 100 | 51 | 66 | 80 | 80 | 80 | 39 | 54 | 61 | 61 | 61 |
| NJ 10-30GM-N... | 140 | 100 | 76 | 91 | 100 | 100 | 100 | 73 | 88 | 100 | 100 | 100 | 62 | 77 | 81 | 81 | 81 | 54 | 63 | 63 | 63 | 63 |
| NJ 15-30GK...-N... | 140 | 100 | 73 | 88 | 100 | 100 | 100 | 69 | 84 | 100 | 100 | 100 | 51 | 66 | 80 | 80 | 80 | 39 | 54 | 61 | 61 | 61 |
| NJ 15-30GK-N-150... | 140 | 100 | 73 | 88 | 124 | 150 | 150 | 69 | 84 | 119 | 150 | 150 | 51 | 66 | 101 | 150 | 150 | 39 | 54 | 89 | 136 | 136 |
| NJ 15-30GM-N... | 140 | 100 | 76 | 91 | 100 | 100 | 100 | 73 | 88 | 100 | 100 | 100 | 62 | 77 | 81 | 81 | 81 | 54 | 63 | 63 | 63 | 63 |
| NJ 25-50-N... | 150 | 140 | 73 | 88 | 100 | 100 | 100 | 69 | 84 | 100 | 100 | 100 | 51 | 66 | 80 | 80 | 80 | 39 | 54 | 61 | 61 | 61 |
| NJ 20-40-N... | 140 | 140 | 73 | 88 | 100 | 100 | 100 | 69 | 84 | 100 | 100 | 100 | 51 | 66 | 80 | 80 | 80 | 39 | 54 | 61 | 61 | 61 |



EG-Baumusterprüfbescheinigungen ohne Unterschrift und ohne Siegel haben keine Gültigkeit.
Diese EG-Baumusterprüfbescheinigung darf nur unverändert weiterverbreitet werden.
Auszüge oder Änderungen bedürfen der Genehmigung der Physikalisch-Technischen Bundesanstalt.

Physikalisch-Technische Bundesanstalt • Bundesallee 100 • D-38116 Braunschweig

# Physikalisch-Technische Bundesanstalt

**Braunschweig und Berlin**

## 2. Ergänzung zur EG-Baumusterprüfbescheinigung PTB 00 ATEX 2048 X

Besondere Bedingungen

1. Beim Einsatz der zylinderförmigen induktiven Sensoren Typen NC... und NJ... im Temperaturbereich von -60°C bis -20 °C sind diese durch Einbau in ein zusätzliches Gehäuse vor Schlageinwirkung zu schützen.
2. Die Anschlussteile der zylinderförmigen induktiven Sensoren Typen NC... und NJ... sind so zu errichten, dass mindestens die Schutzart IP20 gemäß IEC-Publikation 60529:1989 erreicht wird.
3. Der Zusammenhang zwischen dem Typ des angeschlossenen Stromkreises, der höchstzulässigen Umgebungstemperatur und der Temperaturklasse sowie den wirksamen inneren Reaktanzen für die einzelnen Typen der zylinderförmigen induktiven Sensoren ist den Tabellen 1 und 2 dieser 2. Ergänzung der EG-Baumusterprüfbescheinigung PTB 00 ATEX 2048 X zu entnehmen.

4. Bei den folgenden Typen der zylinderförmigen induktiven Sensoren ist die unzulässige elektrostatische Aufladung der Metallgehäuseteile zu vermeiden. Gefährliche elektrostatische Aufladungen können durch Erdung der Metallgehäuseteile vermieden werden, wobei sehr kleine Metallgehäuseteile (z.B. Schrauben) nicht geerdet werden müssen:

| | | |
|---|---|---|
| NCB1,5...M...N0... | NJ 1,5-6,5...-N... | NJ 4-30GM-N-200... |
| NCB2-12GM...-N0... | NJ 1,5-10GM-N-Y... | NJ 5-11-N-545... |
| NCN4-12GM...-N0... | NJ 1,5-8GM-N... | NJ 5-11-N-G... |
| NCB5-18GM...-N0... | NJ 1,5-8-N... | NJ 5-18GM-N... |
| NCN8-18GM...-N0... | NJ 1,5-18GM-N-D... | NJ 6-22-N-G... |
| NCB10-30GM..-N0... | NJ 2-11-N-G... | NJ 8-18GM-N... |
| NCN15-30GM...-N0... | NJ 2-12GM-N... | NJ 10-22-N-G... |
| NJ 0,2-10GM-N... | NJ 2-14GM-N... | NJ 10-30GM-N... |
| NJ 0,8-4,5-N... | NJ 2,5-14GM-N... | NJ 15-30GM-N... |
| NJ 0,8-5GM-N... | NJ 4-12GM-N... | |

Prüfbericht: PTB Ex 04-23445

Zertifizierungsstelle Explosionsschutz
Im Auftrag

Braunschweig, 12. Juli 2004

Dr.-Ing. U. Gerlach
Regierungsrat



EG-Baumusterprüfbescheinigungen ohne Unterschrift und ohne Siegel haben keine Gültigkeit.
Diese EG-Baumusterprüfbescheinigung darf nur unverändert weiterverbreitet werden.
Auszüge oder Änderungen bedürfen der Genehmigung der Physikalisch-Technischen Bundesanstalt.

# Physikalisch-Technische Bundesanstalt

**Braunschweig und Berlin**

## 3. ERGÄNZUNG

**gemäß Richtlinie 94/9/EG Anhang III Ziffer 6**

## zur EG-Baumusterprüfbescheinigung PTB 00 ATEX 2048 X

Gerät: Zylinderförmige induktive Sensoren Typen NC... und NJ...

Kennzeichnung: ⟨Ex⟩ **II 1 G EEx ia IIC T6**

Hersteller: Pepperl + Fuchs GmbH

Anschrift: Königsberger Allee 87, 68307 Mannheim, Deutschland

Beschreibung der Ergänzungen und Änderungen

Die zylinderförmigen induktiven Sensoren der Typenreihe NC... und NJ... dürfen zukünftig auch wie in den Prüfungsunterlagen zum Prüfbericht PTB Ex 05-25204 beschrieben gefertigt und betrieben werden.

Die Änderungen betreffen die Erweiterung der Typenreihe NC... (neue Typen für den Einsatz als Kategorie 1-Gerät bzw. Kategorie 2-Gerät), den inneren Aufbau (weitere Schaltplanbeispiele, neue LED-Typen, neue Gießharztypen) sowie die Erweiterung von Punkt 4 der „Besonderen Bedingungen" um die neuen Typen der Typenreihe NC... .

Um folgende Typen der zylinderförmigen induktiven Sensoren wird die EG-Baumusterprüfbescheinigung erweitert:

NCB4-12GM...-N0...
NCB8-18GM...-N0...
NCB15-30GM...-N0...

Für diese Typen gelten die unten aufgeführten "Elektrischen Daten".

Alle anderen Angaben gelten unverändert auch für diese dritte Ergänzung.



EG-Baumusterprüfbescheinigungen ohne Unterschrift und ohne Siegel haben keine Gültigkeit.
Diese EG-Baumusterprüfbescheinigung darf nur unverändert weiterverbreitet werden.
Auszüge oder Änderungen bedürfen der Genehmigung der Physikalisch-Technischen Bundesanstalt.

Physikalisch-Technische Bundesanstalt • Bundesallee 100 • D-38116 Braunschweig

## 3. Ergänzung zur EG-Baumusterprüfbescheinigung PTB 00 ATEX 2048 X

Elektrische Daten

Auswerte- und Versorgungsstromkreis ..... in Zündschutzart Eigensicherheit EEx ia IIC/IIB
bzw. EEx ib IIC/IIB
nur zum Anschluss an bescheinigte eigensichere Stromkreise
Höchstwerte:

| Typ 1 | Typ 2 | Typ 3 | Typ 4 |
|---|---|---|---|
| $U_i$ = 16 V | $U_i$ = 16 V | $U_i$ = 16 V | $U_i$ = 16 V |
| $I_i$ = 25 mA | $I_i$ = 25 mA | $I_i$ = 52 mA | $I_i$ = 76 mA |
| $P_i$ = 34 mW | $P_i$ = 64 mW | $P_i$ = 169 mW | $P_i$ = 242 mW |

Beim Einsatz als Kategorie 1-Gerät ist zu beachten, dass der Auswerte- und Versorgungsstromkreis der Zündschutzart Eigensicherheit EEx ia IIC/IIB entsprechen muss.

Die Zusammenhänge zwischen dem Typ des angeschlossenen Stromkreises, der höchstzulässigen Umgebungstemperatur für den Einsatz als Kategorie 1- bzw. Kategorie 2-Gerät und der Temperaturklasse sowie den wirksamen inneren Reaktanzen für die einzelnen Typen der zylinderförmigen induktiven Sensoren sind den nachfolgenden Tabellen zu entnehmen:



EG-Baumusterprüfbescheinigungen ohne Unterschrift und ohne Siegel haben keine Gültigkeit.
Diese EG-Baumusterprüfbescheinigung darf nur unverändert weiterverbreitet werden.
Auszüge oder Änderungen bedürfen der Genehmigung der Physikalisch-Technischen Bundesanstalt.

Physikalisch-Technische Bundesanstalt • Bundesallee 100 • D-38116 Braunschweig

## 3. Ergänzung zur EG-Baumusterprüfbescheinigung PTB 00 ATEX 2048 X

Tabelle 1: Einsatz als Kategorie 1-Gerät

| Typ | Ci/ nF | Li/ µH | Typ 1 T6 | T5 | T4 | T3 | T2-T1 | Typ 2 T6 | T5 | T4 | T3 | T2-T1 | Typ 3 T6 | T5 | T4 | T3 | T2-T1 | Typ 4 T6 | T5 | T4 | T3 | T2-T1 |
|---|---|---|---|---|---|---|---|---|---|---|---|---|---|---|---|---|---|---|---|---|---|---|
| NCB4-12GM...-N0... | 120 | 50 | 57 | 69 | 97 | 97 | 97 | 52 | 64 | 92 | 92 | 92 | 34 | 46 | 74 | 74 | 74 | 22 | 34 | 52 | 52 | 52 |
| NCB8-18GM...-N0... | 120 | 50 | 57 | 69 | 97 | 97 | 97 | 52 | 64 | 92 | 92 | 92 | 34 | 46 | 74 | 74 | 74 | 22 | 34 | 52 | 52 | 52 |
| NCB15-30GM...-N0... | 120 | 150 | 57 | 69 | 97 | 97 | 97 | 52 | 64 | 92 | 92 | 92 | 34 | 46 | 74 | 74 | 74 | 22 | 34 | 52 | 52 | 52 |

Tabelle 2: Einsatz als Kategorie 2-Gerät

| Typ | Ci/ nF | Li/ µH | Typ 1 T6 | T5 | T4 | T3 | T2-T1 | Typ 2 T6 | T5 | T4 | T3 | T2-T1 | Typ 3 T6 | T5 | T4 | T3 | T2-T1 | Typ 4 T6 | T5 | T4 | T3 | T2-T1 |
|---|---|---|---|---|---|---|---|---|---|---|---|---|---|---|---|---|---|---|---|---|---|---|
| NCB4-12GM...-N0... | 120 | 50 | 74 | 89 | 100 | 100 | 100 | 69 | 84 | 100 | 100 | 100 | 51 | 66 | 74 | 74 | 74 | 39 | 52 | 52 | 52 | 52 |
| NCB8-18GM...-N0... | 120 | 50 | 74 | 89 | 100 | 100 | 100 | 69 | 84 | 100 | 100 | 100 | 51 | 66 | 74 | 74 | 74 | 39 | 52 | 52 | 52 | 52 |
| NCB15-30GM...-N0... | 120 | 150 | 74 | 89 | 100 | 100 | 100 | 69 | 84 | 100 | 100 | 100 | 51 | 66 | 74 | 74 | 74 | 39 | 52 | 52 | 52 | 52 |



EG-Baumusterprüfbescheinigungen ohne Unterschrift und ohne Siegel haben keine Gültigkeit.
Diese EG-Baumusterprüfbescheinigung darf nur unverändert weiterverbreitet werden.
Auszüge oder Änderungen bedürfen der Genehmigung der Physikalisch-Technischen Bundesanstalt.

Physikalisch-Technische Bundesanstalt • Bundesallee 100 • D-38116 Braunschweig

# Physikalisch-Technische Bundesanstalt

**Braunschweig und Berlin**

## 3. Ergänzung zur EG-Baumusterprüfbescheinigung PTB 00 ATEX 2048 X

Besondere Bedingungen

1. Beim Einsatz der zylinderförmigen induktiven Sensoren Typen NC... und NJ... im Temperaturbereich von -60 °C bis -20 °C sind diese durch Einbau in ein zusätzliches Gehäuse vor Schlageinwirkung zu schützen.
2. Die Anschlussteile der zylinderförmigen induktiven Sensoren Typen NC... und NJ... sind so zu errichten, dass mindestens die Schutzart IP20 gemäß IEC-Publikation 60529:1989 erreicht wird.
3. Der Zusammenhang zwischen dem Typ des angeschlossenen Stromkreises, der höchstzulässigen Umgebungstemperatur und der Temperaturklasse sowie den wirksamen inneren Reaktanzen für die einzelnen Typen der zylinderförmigen induktiven Sensoren ist den Tabellen 1 und 2 der zweiten Ergänzung und für die neuen Typen den Tabellen 1 und 2 dieser dritten Ergänzung der EG-Baumusterprüfbescheinigung PTB 00 ATEX 2048 X zu entnehmen.
4. Bei den folgenden Typen der zylinderförmigen induktiven Sensoren ist die unzulässige elektrostatische Aufladung der Metallgehäuseteile zu vermeiden. Gefährliche elektrostatische Aufladungen der Metallgehäuseteile können durch Erdung dieser Metallgehäuseteile vermieden werden, wobei sehr kleine Metallgehäuseteile (z.B. Schrauben) nicht geerdet werden müssen:

NCB1,5...M...N0...
NCB2-12GM...-N0...
NCB4-12GM...-N0...
NCB5-18GM...-N0...
NCB8-18GM...-N0...
NCB10-30GM..-N0...
NCB15-30GM...-N0...
NCN4-12GM...-N0...
NCN8-18GM...-N0...
NCN15-30GM...-N0...
NJ 0,2-10GM-N...
NJ 0,8-4,5-N...
NJ 0,8-5GM-N...
NJ 1,5-6,5...-N...
NJ 1,5-10GM-N-Y...
NJ 1,5-8GM-N...
NJ 1,5-8-N...
NJ 1,5-18GM-N-D...
NJ 2-11-N-G...
NJ 2-12GM-N...
NJ 2-14GM-N...
NJ 2,5-14GM-N...
NJ 4-12GM-N...
NJ 4-30GM-N-200...
NJ 5-11-N-545...
NJ 5-11-N-G...
NJ 5-18GM-N...
NJ 6-22-N-G...
NJ 8-18GM-N...
NJ 10-22-N-G...
NJ 10-30GM-N...
NJ 15-30GM-N...

Prüfbericht: PTB Ex 05-25204

Zertifizierungsstelle Explosionsschutz
Im Auftrag

Dr.-Ing. U. Johannsmeyer
Direktor und Professor

Braunschweig, 7. Oktober 2005



EG-Baumusterprüfbescheinigungen ohne Unterschrift und ohne Siegel haben keine Gültigkeit.
Diese EG-Baumusterprüfbescheinigung darf nur unverändert weiterverbreitet werden.
Auszüge oder Änderungen bedürfen der Genehmigung der Physikalisch-Technischen Bundesanstalt.

Physikalisch-Technische Bundesanstalt • Bundesallee 100 • D-38116 Braunschweig

# Physikalisch-Technische Bundesanstalt

**Braunschweig und Berlin**

PTB

(1) # EC-TYPE-EXAMINATION CERTIFICATE

**(Translation)**

(2) Equipment and Protective Systems Intended for Use in Potentially Explosive Atmospheres - **Directive 94/9/EC**

(3) EC-type-examination Certificate Number:

**PTB 00 ATEX 2048 X**

(4) Equipment: Cylindrical inductive sensors, types NC... and NJ...

(5) Manufacturer: Pepperl + Fuchs GmbH

(6) Address: D-68307 Mannheim

(7) This equipment and any acceptable variation thereto are specified in the schedule to this certificate and the documents therein referred to.

(8) The Physikalisch-Technische Bundesanstalt, notified body No. 0102 in accordance with Article 9 of the Council Directive 94/9/EC of 23 March 1994, certifies that this equipment has been found to comply with the Essential Health and Safety Requirements relating to the design and construction of equipment and protective systems intended for use in potentially explosive atmospheres, given in Annex II to the Directive.

The examination and test results are recorded in the confidential report PTB Ex 00-29206.

(9) Compliance with the Essential Health and Safety Requirements has been assured by compliance with:

**EN 50014:1997** **EN 50020:1994**

(10) If the sign "X" is placed after the certificate number, it indicates that the equipment is subject to special conditions for safe use specified in the schedule to this certificate.

(11) This EC-type-examination Certificate relates only to the design and construction of the specified equipment in accordance with Directive 94/9/EC. Further requirements of this Directive apply to the manufacture and supply of this equipment.

(12) The marking of the equipment shall include the following:

**Ex II 2 G EEx ia IIC T6**

Zertifizierungsstelle Explosionsschutz
By order:

Braunschweig, September 26, 2000

Dr.-Ing. U. Johannsmeyer
Regierungsdirektor

PHYSIKALISCH-TECHNISCHE BUNDESANSTALT 24



EC-type-examination Certificates without signature and official stamp shall not be valid. The certificates may be circulated only without alteration. Extracts or alterations are subject to approval by the Physikalisch-Technische Bundesanstalt.
In case of dispute, the German text shall prevail.

Physikalisch-Technische Bundesanstalt • Bundesallee 100 • D-38116 Braunschweig

(13) # SCHEDULE

(14) ## EC-TYPE-EXAMINATION CERTIFICATE PTB 00 ATEX 2048 X

(15) Description of equipment

The cylindrical inductive sensors, types NC... and NJ...are used to convert displacements into electrical signals.

The cylindrical inductive sensors may be operated with intrinsically safe circuits certified for categories and explosion groups [EEx ia] IIC or IIB resp. [EEx ib] IIC or IIB. The category as well as the explosion group of the intrinsically safe cylindrical inductive sensors depends on the connected supplying intrinsically safe circuit.

Electrical data

Evaluation and
supply circuit..... type of protection Intrinsic Safety EEx ia IIC/IIB
resp. EEx ib IIC/IIB
only for connection to certified intrinsically safe circuits
maximum values:

| type 1 | type 2 | type 3 | type 4 |
|---|---|---|---|
| $U_i$ = 16 V | $U_i$ = 16 V | $U_i$ = 16 V | $U_i$ = 16 V |
| $I_i$ = 25 mA | $I_i$ = 25 mA | $I_i$ = 52 mA | $I_i$ = 76 mA |
| $P_i$ = 34 mW | $P_i$ = 64 mW | $P_i$ = 169 mW | $P_i$ = 242 mW |

The assignment of the type of the connected circuit to the maximum permissible ambient temperature and the temperature class as well as the effective internal reactances for the individual types of cylindrical inductive sensors is shown in the following table:



EC-type-examination Certificates without signature and official stamp shall not be valid. The certificates may be circulated only without alteration. Extracts or alterations are subject to approval by the Physikalisch-Technische Bundesanstalt.
In case of dispute, the German text shall prevail.

Physikalisch-Technische Bundesanstalt • Bundesallee 100 • D-38116 Braunschweig

# Physikalisch-Technische Bundesanstalt

**Braunschweig und Berlin**

**SCHEDULE TO EC-TYPE-EXAMINATION CERTIFICATE PTB 00 ATEX 2048 X**

| types | $C_i$ | $L_i$ | type 1 | | | type 2 | | | type 3 | | | type 4 | | |
|---|---|---|---|---|---|---|---|---|---|---|---|---|---|---|
| | | | maximum permissible ambient temperature in °C for application in temperature class | | | | | | | | | | | |
| | [nF] | [µH] | T6 | T5 | T4-T1 | T6 | T5 | T4-T1 | T6 | T5 | T4-T1 | T6 | T5 | T4-T1 |
| NCB1,5...M...N0... | 90 | 100 | 74 | 89 | 100 | 69 | 84 | 100 | 51 | 66 | 85 | 39 | 54 | 67 |
| NCB2-12GK...-N0... | 90 | 100 | 73 | 88 | 100 | 69 | 84 | 100 | 51 | 66 | 80 | 39 | 54 | 61 |
| NCB2-12GM...-N0... | 90 | 100 | 76 | 91 | 100 | 73 | 88 | 100 | 62 | 77 | 81 | 54 | 63 | 63 |
| NCN4-12GK...-N0... | 95 | 100 | 73 | 88 | 100 | 69 | 84 | 100 | 51 | 66 | 80 | 39 | 54 | 61 |
| NCN4-12GM...-N0... | 95 | 100 | 76 | 91 | 100 | 73 | 88 | 100 | 62 | 77 | 81 | 54 | 63 | 63 |
| NCB5-18GK...-N0... | 95 | 100 | 73 | 88 | 100 | 69 | 84 | 100 | 51 | 66 | 80 | 39 | 54 | 61 |
| NCB5-18GM...-N0... | 95 | 100 | 76 | 91 | 100 | 73 | 88 | 100 | 62 | 77 | 81 | 54 | 63 | 63 |
| NCN8-18GK...-N0... | 95 | 100 | 73 | 88 | 100 | 69 | 84 | 100 | 51 | 66 | 80 | 39 | 54 | 61 |
| NCN8-18GM...-N0... | 95 | 100 | 76 | 91 | 100 | 73 | 88 | 100 | 62 | 77 | 81 | 54 | 63 | 63 |
| NCB10-30GK..-N0... | 105 | 100 | 73 | 88 | 100 | 69 | 84 | 100 | 51 | 66 | 80 | 39 | 54 | 61 |
| NCB10-30GM..-N0... | 105 | 100 | 76 | 91 | 100 | 73 | 88 | 100 | 62 | 77 | 81 | 54 | 63 | 63 |
| NCN15-30GK...-N0... | 110 | 100 | 73 | 88 | 100 | 69 | 84 | 100 | 51 | 66 | 80 | 39 | 54 | 61 |
| NCN15-30GM...-N0... | 110 | 100 | 76 | 91 | 100 | 73 | 88 | 100 | 62 | 77 | 81 | 54 | 63 | 63 |
| NJ 0,2-10GM-N... | 20 | 50 | 73 | 88 | 100 | 68 | 83 | 100 | 49 | 64 | 67 | 36 | 42 | 42 |
| NJ 0,8-4,5-N... | 30 | 50 | 73 | 88 | 100 | 68 | 83 | 100 | 49 | 64 | 67 | 36 | 42 | 42 |
| NJ 0,8-5GM-N... | 30 | 50 | 73 | 88 | 100 | 68 | 83 | 100 | 49 | 64 | 67 | 36 | 42 | 42 |
| NJ 1,5-6,5...-N... | 30 | 50 | 73 | 88 | 100 | 68 | 83 | 100 | 49 | 64 | 67 | 36 | 42 | 42 |
| NJ 1,5-10GM-N-Y... | 20 | 50 | 73 | 88 | 100 | 68 | 83 | 100 | 49 | 64 | 67 | 36 | 42 | 42 |
| NJ 1,5-8GM-N... | 30 | 50 | 73 | 88 | 100 | 68 | 83 | 100 | 49 | 64 | 67 | 36 | 42 | 42 |
| NJ 1,5-8-N... | 20 | 50 | 73 | 88 | 100 | 68 | 83 | 100 | 49 | 64 | 67 | 36 | 42 | 42 |
| NJ 1,5-18GM-N-D... | 50 | 60 | 76 | 91 | 100 | 73 | 88 | 100 | 62 | 77 | 81 | 54 | 63 | 63 |
| NJ 2-11-N... | 45 | 50 | 73 | 88 | 100 | 66 | 81 | 100 | 45 | 60 | 89 | 30 | 45 | 74 |
| NJ 2-11-N-G... | 30 | 50 | 76 | 91 | 100 | 73 | 88 | 100 | 62 | 77 | 81 | 54 | 63 | 63 |
| NJ 2-12GK-N... | 45 | 50 | 73 | 88 | 100 | 69 | 84 | 100 | 51 | 66 | 80 | 39 | 54 | 61 |
| NJ 2-12GM-N... | 30 | 50 | 76 | 91 | 100 | 73 | 88 | 100 | 62 | 77 | 81 | 54 | 63 | 63 |
| NJ 2-14GM-N... | 30 | 50 | 76 | 91 | 100 | 73 | 88 | 100 | 62 | 77 | 81 | 54 | 63 | 63 |
| NJ 2,5-14GM-N... | 30 | 50 | 76 | 91 | 100 | 73 | 88 | 100 | 62 | 77 | 81 | 54 | 63 | 63 |
| NJ 4-12GK-N... | 45 | 50 | 73 | 88 | 100 | 69 | 84 | 100 | 51 | 66 | 80 | 39 | 54 | 61 |
| NJ 4-14GK-N... | 45 | 50 | 73 | 88 | 100 | 69 | 84 | 100 | 51 | 66 | 80 | 39 | 54 | 61 |
| NJ 4-12GM-N... | 45 | 50 | 73 | 88 | 100 | 68 | 83 | 100 | 49 | 64 | 67 | 36 | 42 | 42 |
| NJ 4-30GM-N-200... | 70 | 100 | 73 | 88 | 100 | 66 | 81 | 100 | 45 | 60 | 89 | 30 | 45 | 74 |
| NJ 5-10-11-N... | 70 | 100 | 73 | 88 | 100 | 66 | 81 | 100 | 45 | 60 | 78 | 30 | 45 | 57 |
| NJ 5-11-N... | 45 | 50 | 72 | 87 | 100 | 65 | 80 | 100 | 42 | 57 | 82 | 26 | 41 | 63 |
| NJ 5-18GK-N... | 70 | 50 | 73 | 88 | 100 | 69 | 84 | 100 | 51 | 66 | 80 | 39 | 54 | 61 |
| NJ 5-18GM-N... | 70 | 50 | 76 | 91 | 100 | 73 | 88 | 100 | 62 | 77 | 81 | 54 | 63 | 63 |
| NJ 6-22-N... | 130 | 100 | 73 | 88 | 100 | 69 | 84 | 100 | 51 | 66 | 80 | 39 | 54 | 61 |
| NJ 8-18GK-N... | 70 | 50 | 73 | 88 | 100 | 69 | 84 | 100 | 51 | 66 | 80 | 39 | 54 | 61 |



EC-type-examination Certificates without signature and official stamp shall not be valid. The certificates may be circulated only without alteration. Extracts or alterations are subject to approval by the Physikalisch-Technische Bundesanstalt.
In case of dispute, the German text shall prevail.

Physikalisch-Technische Bundesanstalt • Bundesallee 100 • D-38116 Braunschweig

| types | $C_i$ [nF] | $L_i$ [µH] | type 1 | | | type 2 | | | type 3 | | | type 4 | | |
|---|---|---|---|---|---|---|---|---|---|---|---|---|---|---|
| | | | maximum permissible ambient temperature in °C for application in temperature class | | | | | | | | | | | |
| | | | T6 | T5 | T4-T1 | T6 | T5 | T4-T1 | T6 | T5 | T4-T1 | T6 | T5 | T4-T1 |
| NJ 8-18GM-N... | 70 | 50 | 76 | 91 | 100 | 73 | 88 | 100 | 62 | 77 | 81 | 54 | 63 | 63 |
| NJ 10-22-N... | 130 | 100 | 73 | 88 | 100 | 69 | 84 | 100 | 51 | 66 | 80 | 39 | 54 | 61 |
| NJ 10-30GK...-N... | 140 | 100 | 73 | 88 | 100 | 69 | 84 | 100 | 51 | 66 | 80 | 39 | 54 | 61 |
| NJ 10-30GM-N... | 140 | 100 | 76 | 91 | 100 | 73 | 88 | 100 | 62 | 77 | 81 | 54 | 63 | 63 |
| NJ 15-30GK...-N... | 140 | 100 | 73 | 88 | 100 | 69 | 84 | 100 | 51 | 66 | 80 | 39 | 54 | 61 |
| NJ 15-30GM-N... | 140 | 100 | 76 | 91 | 100 | 73 | 88 | 100 | 62 | 77 | 81 | 54 | 63 | 63 |
| NJ 25-50-N... | 150 | 140 | 73 | 88 | 100 | 69 | 84 | 100 | 51 | 66 | 80 | 39 | 54 | 61 |
| NJ 20-40-N... | 140 | 140 | 73 | 88 | 100 | 69 | 84 | 100 | 51 | 66 | 80 | 39 | 54 | 61 |

(16) Test report PTB Ex 00-29206

(17) Special conditions for safe use

1. For the application within a temperature range of -60 °C to -20 °C the cylindrical inductive sensors, types NC... and NJ... must be protected against damage due to impact by mounting into an additional housing.
2. The connection facilities of the cylindrical inductive sensors, types NC... and NJ... shall be installed as such that at least a degree of protection of IP20 according to IEC-publication 60529:1989 is met.
3. The assignment of the type of the connected circuit to the maximum permissible ambient temperature and the temperature class as well as the effective internal reactances for the individual types of cylindrical inductive sensors is shown in the table given under item (15) of this EC-type-examination certifcate.
4. Inadmissible electrostatic charge of parts of the metal housing has to be avoided for the following types of cylindrical inductive sensors. Dangerous electrostatic charges of parts of the metal housing can be avoided by grounding of these parts whereas very small parts of the metal housing (e.g. screws) don't need to be grounded:

| | | |
|---|---|---|
| NCB1,5...M...N0... | NJ 1,5-6,5...-N... | NJ 4-30GM-N-200... |
| NCB2-12GM...-N0... | NJ 1,5-10GM-N-Y... | NJ 5-11-N-545... |
| NCN4-12GM...-N0... | NJ 1,5-8GM-N... | NJ 5-11-N-G... |
| NCB5-18GM...-N0... | NJ 1,5-8-N... | NJ 5-18GM-N... |
| NCN8-18GM...-N0... | NJ 1,5-18GM-N-D... | NJ 6-22-N-G... |




EC-type-examination Certificates without signature and official stamp shall not be valid. The certificates may be circulated only without alteration. Extracts or alterations are subject to approval by the Physikalisch-Technische Bundesanstalt.
In case of dispute, the German text shall prevail.

Physikalisch-Technische Bundesanstalt • Bundesallee 100 • D-38116 Braunschweig

## SCHEDULE TO EC-TYPE-EXAMINATION CERTIFICATE PTB 00 ATEX 2048 X

| | | |
|---|---|---|
| NCB10-30GM..-N0... | NJ 2-11-N-G... | NJ 8-18GM-N... |
| NCN15-30GM...-N0... | NJ 2-12GM-N... | NJ 10-22-N-G... |
| NJ 0,2-10GM-N... | NJ 2-14GM-N... | NJ 10-30GM-N... |
| NJ 0,8-4,5-N... | NJ 2,5-14GM-N... | |
| NJ 0,8-5GM-N... | NJ 4-12GM-N... | |

(18) Essential health and safety requirements

Met by the standards mentioned above

Zertifizierungsstelle Explosionsschutz
By order:

Dr.-Ing. U. Johannsmeyer
Regierungsdirektor

Braunschweig, September 26, 2000



EC-type-examination Certificates without signature and official stamp shall not be valid. The certificates may be circulated only without alteration. Extracts or alterations are subject to approval by the Physikalisch-Technische Bundesanstalt.
In case of dispute, the German text shall prevail.

Physikalisch-Technische Bundesanstalt • Bundesallee 100 • D-38116 Braunschweig

# 1. SUPPLEMENT

**according to Directive 94/9/EC Annex III.6**

## to EC-TYPE-EXAMINATION CERTIFICATE PTB 00 ATEX 2048 X

## (Translation)

Equipment: Cylindrical inductive sensors, types NC... and NJ...

Marking: ⟨Ex⟩ **II 2 G EEx ia IIC T6**

Manufacturer: Pepperl + Fuchs GmbH

Address: Königsberger Allee 87
68307 Mannheim; Germany

Description of supplements and modifications

The cylindrical inductive sensors of type series NC... and NJ... , listed as follows, may in future also be used in hazardous areas requiring apparatus of category 1.

The modifications exclusively concern the "Electrical data" (modified maximum permissible ambient temperatures for use as category-1-apparatus, reduction of the intrinsically safe evaluation and supply circuit to category ia) as well as the marking of the following types of cylindrical inductive sensors.

| | | |
|---|---|---|
| NCB1,5...M...N0... | NCN15-30GM...-N0... | NJ 2-12GM-N... |
| NCB2-12GM...-N0... | NJ 0,8-5GM-N... | NJ 4-12GM-N... |
| NCN4-12GM...-N0... | NJ 1,5-6,5...-N... | NJ 5-18GM-N... |
| NCB5-18GM...-N0... | NJ 1,5-8GM-N... | NJ 8-18GM-N... |
| NCN8-18GM...-N0... | NJ 2-11-N... | NJ 10-30GM-N... |
| NCB10-30GM..-N0... | NJ 2-11-N-G... | NJ 15-30GM-N... |

In future the marking of the above-listed sensors for application as category-1-apparatus will be:

⟨Ex⟩ **II 1 G EEx ia IIC T6**

The "Special conditions" are also valid for use as category-1-apparatus without changes.



EC-type-examination Certificates without signature and official stamp shall not be valid. The certificates may be circulated only without alteration. Extracts or alterations are subject to approval by the Physikalisch-Technische Bundesanstalt.
In case of dispute, the German text shall prevail.

Physikalisch-Technische Bundesanstalt • Bundesallee 100 • 38116 Braunschweig, Germany

# Physikalisch-Technische Bundesanstalt

**Braunschweig und Berlin**

## 1. SUPPLEMENT TO EC-TYPE-EXAMINATION CERTIFICATE PTB 00 ATEX 2048 X

Electrical data

Evaluation and supply circuit ..... type of protection Intrinsic Safety EEx ia IIC/IIB
for connection to certified intrinsically safe circuits only
Maximum values:

| type 1 | type 2 | type 3 | type 4 |
|---|---|---|---|
| $U_i$ = 16 V | $U_i$ = 16 V | $U_i$ = 16 V | $U_i$ = 16 V |
| $I_i$ = 25 mA | $I_i$ = 25 mA | $I_i$ = 52 mA | $I_i$ = 76 mA |
| $P_i$ = 34 mW | $P_i$ = 64 mW | $P_i$ = 169 mW | $P_i$ = 242 mW |

The assignment of the type of the connected circuit to the maximum permissible ambient temperature for use as category-1-apparatus and the temperature class as well as the effective internal reactances for the individual types of cylindrical inductive sensors is shown in the following table:

| types | $C_i$ | $L_i$ | type 1 | | | type 2 | | | type 3 | | | type 4 | | |
|---|---|---|---|---|---|---|---|---|---|---|---|---|---|---|
| | | | maximum permissible ambient temperature in °C for use in temperature class | | | | | | | | | | | |
| | [nF] | [µH] | T6 | T5 | T4-T1 | T6 | T5 | T4-T1 | T6 | T5 | T4-T1 | T6 | T5 | T4-T1 |
| NCB1,5...M...N0... | 90 | 100 | 57 | 69 | 97 | 52 | 64 | 92 | 34 | 46 | 74 | 22 | 34 | 62 |
| NCB2-12GM...-N0... | 90 | 100 | 59 | 71 | 99 | 56 | 68 | 96 | 45 | 57 | 81 | 37 | 49 | 63 |
| NCN4-12GM...-N0... | 95 | 100 | 59 | 71 | 99 | 56 | 68 | 96 | 45 | 57 | 81 | 37 | 49 | 63 |
| NCB5-18GM...-N0... | 95 | 100 | 59 | 71 | 99 | 56 | 68 | 96 | 45 | 57 | 81 | 37 | 49 | 63 |
| NCN8-18GM...-N0... | 95 | 100 | 59 | 71 | 99 | 56 | 68 | 96 | 45 | 57 | 81 | 37 | 49 | 63 |
| NCB10-30GM..-N0... | 105 | 100 | 59 | 71 | 99 | 56 | 68 | 96 | 45 | 57 | 81 | 37 | 49 | 63 |
| NCN15-30GM...-N0... | 110 | 100 | 59 | 71 | 99 | 56 | 68 | 96 | 45 | 57 | 81 | 37 | 49 | 63 |
| NJ 0,8-5GM-N... | 30 | 50 | 56 | 68 | 96 | 51 | 63 | 91 | 32 | 44 | 67 | 19 | 31 | 41 |
| NJ 1,5-6,5...-N... | 30 | 50 | 56 | 68 | 96 | 51 | 63 | 91 | 32 | 44 | 67 | 19 | 31 | 41 |
| NJ 1,5-10GM-N-Y... | 30 | 50 | 56 | 68 | 96 | 51 | 63 | 91 | 32 | 44 | 67 | 19 | 31 | 41 |
| NJ 2-11-N... | 45 | 50 | 55 | 67 | 95 | 49 | 61 | 89 | 28 | 40 | 68 | 13 | 25 | 53 |
| NJ 2-11-N-G... | 30 | 50 | 59 | 71 | 99 | 56 | 68 | 96 | 45 | 57 | 81 | 37 | 49 | 63 |
| NJ 2-12GM-N... | 30 | 50 | 59 | 71 | 99 | 56 | 68 | 96 | 45 | 57 | 81 | 37 | 49 | 63 |
| NJ 4-12GM-N... | 45 | 50 | 56 | 68 | 96 | 51 | 63 | 91 | 32 | 44 | 67 | 19 | 31 | 41 |
| NJ 5-18GM-N... | 70 | 50 | 59 | 71 | 99 | 56 | 68 | 96 | 45 | 57 | 81 | 37 | 49 | 63 |
| NJ 8-18GM-N... | 70 | 50 | 59 | 71 | 99 | 56 | 68 | 96 | 45 | 57 | 81 | 37 | 49 | 63 |
| NJ 10-30GM-N... | 140 | 100 | 59 | 71 | 99 | 56 | 68 | 96 | 45 | 57 | 81 | 37 | 49 | 63 |
| NJ 15-30GM-N... | 140 | 100 | 59 | 71 | 99 | 56 | 68 | 96 | 45 | 57 | 81 | 37 | 49 | 63 |



EC-type-examination Certificates without signature and official stamp shall not be valid. The certificates may be circulated only without alteration. Extracts or alterations are subject to approval by the Physikalisch-Technische Bundesanstalt.
In case of dispute, the German text shall prevail.

Physikalisch-Technische Bundesanstalt • Bundesallee 100 • 38116 Braunschweig, Germany

# Physikalisch-Technische Bundesanstalt

**Braunschweig und Berlin**

## 1. SUPPLEMENT TO EC-TYPE-EXAMINATION CERTIFICATE PTB 00 ATEX 2048 X

Test report: PTB Ex 02-22170

Zertifizierungsstelle Explosionsschutz
By order:

Braunschweig, August 08, 2002

Dr.-Ing. U. Johannsmeyer
Regierungsdirektor



EC-type-examination Certificates without signature and official stamp shall not be valid. The certificates may be circulated only without alteration. Extracts or alterations are subject to approval by the Physikalisch-Technische Bundesanstalt.
In case of dispute, the German text shall prevail.

Physikalisch-Technische Bundesanstalt • Bundesallee 100 • 38116 Braunschweig, Germany

# Physikalisch-Technische Bundesanstalt

**Braunschweig und Berlin**

## 2. SUPPLEMENT

**according to Directive 94/9/EC Annex III.6**

## to EC-TYPE-EXAMINATION CERTIFICATE PTB 00 ATEX 2048 X

## (Translation)

Equipment: Cylindrical inductive sensors, types NC... and NJ...

Marking: ⟨Ex⟩ **II 1 G EEx ia IIC T6**

Manufacturer: Pepperl + Fuchs GmbH

Address: Königsberger Allee 87
68307 Mannheim; Germany

Description of supplements and modifications

The cylindrical inductive sensors of type series NC... and NJ... may in future also be manufactured and operated according to the test documents listed in the test report PTB Ex 04-23445.

The modifications concern the extension of the type series NJ (new types and further types for application as category-1-apparatus), the depiction of the basic construction of the cylindrical inductive sensor, type NJ 4-30GM-N-200... with separate enclosures for oscillator and amplifier, the internal construction (further examples of circuit diagrams, new types of LED´s), the extension of point 4 of the "Special conditions" for type NJ 15-30GM-N... as well as further alternatives for fixing the marking.

The EC-type examination certificate is extended for the following types of cylindrical inductive sensors:

NJ 5-18GK-N-150...
NJ 8-18GK-N-150...
NJ 15-30GK-N-150...

The application conditions as category-1-apparatus are newly determined by this 2nd supplement for the following types of cylindrical inductive sensors:

NJ 1,5-10GM-N-Y...
NJ 1,5-8GM-N...
NJ 1,5-18GM-N-D...
NJ 4-30GM-N-200...
NJ 5-18GK-N...
NJ 5-18GK-N-150...
NJ 8-18GK-N...
NJ 8-18GK-N-150...
NJ 15-30GK-N...
NJ 15-30GK-N-150...



EC-type-examination Certificates without signature and official stamp shall not be valid. The certificates may be circulated only without alteration. Extracts or alterations are subject to approval by the Physikalisch-Technische Bundesanstalt.
In case of dispute, the German text shall prevail.

Physikalisch-Technische Bundesanstalt • Bundesallee 100 • 38116 Braunschweig, Germany

# Physikalisch-Technische Bundesanstalt

**Braunschweig und Berlin**

## 2. SUPPLEMENT TO EC-TYPE-EXAMINATION CERTIFICATE PTB 00 ATEX 2048 X

For a better comprehensibility the "Electrical data" as well the tables showing the relationship between maximum permissible ambient temperatures, temperature classes, electrical data as well as equipment categories for all types of cylindrical inductive sensors are tabulated below:

Furthermore the altered "Special conditions" are listed.

Electrical data

Evaluation and supply circuit..... type of protection Intrinsic Safety EEx ia IIC/IIB
resp. EEx ib IIC/IIB
for connection to certified intrinsically safe circuits only
Maximum values:

| type 1 | type 2 | type 3 | type 4 |
|---|---|---|---|
| $U_i$ = 16 V | $U_i$ = 16 V | $U_i$ = 16 V | $U_i$ = 16 V |
| $I_i$ = 25 mA | $I_i$ = 25 mA | $I_i$ = 52 mA | $I_i$ = 76 mA |
| $P_i$ = 34 mW | $P_i$ = 64 mW | $P_i$ = 169 mW | $P_i$ = 242 mW |

With the application as category-1-apparatus it is to be considered that the evaluation and supply circuit has to comply with type of protection Intrinsic Safety EEx ia IIC/IIB.

For relationship between type of connected circuit, maximum permissible ambient temperature for use as category-1-apparatus resp. as category-2-apparatus and temperature class as well as the effective internal reactances for the individual types of cylindrical inductive sensors reference is made to the following tables:



EC-type-examination Certificates without signature and official stamp shall not be valid. The certificates may be circulated only without alteration. Extracts or alterations are subject to approval by the Physikalisch-Technische Bundesanstalt.
In case of dispute, the German text shall prevail.

Physikalisch-Technische Bundesanstalt • Bundesallee 100 • 38116 Braunschweig, Germany

## 2. SUPPLEMENT TO EC-TYPE-EXAMINATION CERTIFICATE PTB 00 ATEX 2048 X

Table 1: Application as category-1-apparatus

| type | Ci/ nF | Li/ µH | type 1 T6 | T5 | T4 | T3 | T2-T1 | type 2 T6 | T5 | T4 | T3 | T2-T1 | type 3 T6 | T5 | T4 | T3 | T2-T1 | type 4 T6 | T5 | T4 | T3 | T2-T1 |
|---|---|---|---|---|---|---|---|---|---|---|---|---|---|---|---|---|---|---|---|---|---|---|
| NCB1,5-...M...N0... | 90 | 100 | 57 | 69 | 97 | 97 | 97 | 52 | 64 | 92 | 92 | 92 | 34 | 46 | 74 | 74 | 74 | 22 | 34 | 62 | 62 | 62 |
| NCB2-12GM...-N0... | 90 | 100 | 59 | 71 | 99 | 99 | 99 | 56 | 68 | 96 | 96 | 96 | 45 | 57 | 81 | 81 | 81 | 37 | 49 | 63 | 63 | 63 |
| NCN4-12GM...-N0... | 95 | 100 | 59 | 71 | 99 | 99 | 99 | 56 | 68 | 96 | 96 | 96 | 45 | 57 | 81 | 81 | 81 | 37 | 49 | 63 | 63 | 63 |
| NCB5-18GM...-N0... | 95 | 100 | 59 | 71 | 99 | 99 | 99 | 56 | 68 | 96 | 96 | 96 | 45 | 57 | 81 | 81 | 81 | 37 | 49 | 63 | 63 | 63 |
| NCN8-18GM...-N0... | 95 | 100 | 59 | 71 | 99 | 99 | 99 | 56 | 68 | 96 | 96 | 96 | 45 | 57 | 81 | 81 | 81 | 37 | 49 | 63 | 63 | 63 |
| NCB10-30GM...-N0... | 105 | 100 | 59 | 71 | 99 | 99 | 99 | 56 | 68 | 96 | 96 | 96 | 45 | 57 | 81 | 81 | 81 | 37 | 49 | 63 | 63 | 63 |
| NCN15-30GM...-N0... | 110 | 100 | 59 | 71 | 99 | 99 | 99 | 56 | 68 | 96 | 96 | 96 | 45 | 57 | 81 | 81 | 81 | 37 | 49 | 63 | 63 | 63 |
| NJ 0,8-5GM-N... | 30 | 50 | 56 | 68 | 96 | 96 | 96 | 51 | 63 | 91 | 91 | 91 | 32 | 44 | 67 | 67 | 67 | 19 | 31 | 41 | 41 | 41 |
| NJ 1,5-6,5...-N... | 30 | 50 | 56 | 68 | 96 | 96 | 96 | 51 | 63 | 91 | 91 | 91 | 32 | 44 | 67 | 67 | 67 | 19 | 31 | 41 | 41 | 41 |
| NJ 1,5-8GM-N... | 30 | 50 | 56 | 68 | 96 | 96 | 96 | 51 | 63 | 91 | 91 | 91 | 32 | 44 | 67 | 67 | 67 | 19 | 31 | 41 | 41 | 41 |
| NJ 1,5-10GM-N-Y.... | 20 | 50 | 56 | 68 | 96 | 96 | 96 | 51 | 63 | 91 | 91 | 91 | 32 | 44 | 67 | 67 | 67 | 19 | 31 | 41 | 41 | 41 |
| NJ 1,5-18GM-N-D.... | 50 | 60 | 59 | 71 | 99 | 99 | 99 | 56 | 68 | 96 | 96 | 96 | 45 | 57 | 81 | 81 | 81 | 37 | 49 | 63 | 63 | 63 |
| NJ 2-11-N... | 45 | 50 | 55 | 67 | 95 | 95 | 95 | 49 | 61 | 89 | 89 | 89 | 28 | 40 | 68 | 68 | 68 | 13 | 25 | 53 | 53 | 53 |
| NJ 2-11-N-G... | 30 | 50 | 59 | 71 | 99 | 99 | 99 | 56 | 68 | 96 | 96 | 96 | 45 | 57 | 81 | 81 | 81 | 37 | 49 | 63 | 63 | 63 |
| NJ 2-12GM-N... | 30 | 50 | 59 | 71 | 99 | 99 | 99 | 56 | 68 | 96 | 96 | 96 | 45 | 57 | 81 | 81 | 81 | 37 | 49 | 63 | 63 | 63 |
| NJ 4-30GM-N-200... (oscillator) | 70 | 100 | 56 | 68 | 96 | 148 | 192 | 49 | 61 | 89 | 141 | 186 | 28 | 40 | 68 | 120 | 164 | 13 | 25 | 53 | 105 | 149 |
| NJ 4-30GM-N-200... (amplifier) | | | 56 | 68 | 96 | 96 | 96 | 49 | 61 | 89 | 89 | 89 | 28 | 40 | 68 | 68 | 68 | 13 | 25 | 53 | 53 | 53 |
| NJ 4-12GM-N... | 45 | 50 | 56 | 68 | 96 | 96 | 96 | 51 | 63 | 91 | 91 | 91 | 32 | 44 | 67 | 67 | 67 | 19 | 31 | 41 | 41 | 41 |
| NJ 5-18GM-N... | 70 | 50 | 59 | 71 | 99 | 99 | 99 | 56 | 68 | 96 | 96 | 96 | 45 | 57 | 81 | 81 | 81 | 37 | 49 | 63 | 63 | 63 |
| NJ 5-18GK-N... | 70 | 50 | 57 | 69 | 97 | 97 | 97 | 52 | 64 | 92 | 92 | 92 | 34 | 46 | 74 | 74 | 74 | 22 | 34 | 61 | 61 | 61 |
| NJ 5-18GK-N-150... | 70 | 50 | 57 | 69 | 97 | 149 | 150 | 52 | 64 | 92 | 144 | 150 | 34 | 46 | 74 | 126 | 150 | 22 | 34 | 61 | 114 | 136 |
| NJ 8-18GK-N... | 70 | 50 | 57 | 69 | 97 | 97 | 97 | 52 | 64 | 92 | 92 | 92 | 34 | 46 | 74 | 74 | 74 | 22 | 34 | 61 | 61 | 61 |
| NJ 8-18GK-N-150... | 70 | 50 | 57 | 69 | 97 | 149 | 150 | 52 | 64 | 92 | 144 | 150 | 34 | 46 | 74 | 126 | 150 | 22 | 34 | 61 | 114 | 136 |
| NJ 8-18GM-N... | 70 | 50 | 59 | 71 | 99 | 99 | 99 | 56 | 68 | 96 | 96 | 96 | 45 | 57 | 81 | 81 | 81 | 37 | 49 | 63 | 63 | 63 |
| NJ 10-30GM-N... | 140 | 100 | 59 | 71 | 99 | 99 | 99 | 56 | 68 | 96 | 96 | 96 | 45 | 57 | 81 | 81 | 81 | 37 | 49 | 63 | 63 | 63 |
| NJ 15-30GK-N... | 140 | 100 | 57 | 69 | 97 | 97 | 97 | 52 | 64 | 92 | 92 | 92 | 34 | 46 | 74 | 74 | 74 | 22 | 34 | 61 | 61 | 61 |
| NJ 15-30GK-N-150... | 140 | 100 | 57 | 69 | 97 | 149 | 150 | 52 | 64 | 92 | 144 | 150 | 34 | 46 | 74 | 126 | 150 | 22 | 34 | 61 | 114 | 136 |
| NJ 15-30GM-N.... | 140 | 100 | 59 | 71 | 99 | 99 | 99 | 56 | 68 | 96 | 96 | 96 | 45 | 57 | 81 | 81 | 81 | 37 | 49 | 63 | 63 | 63 |




EC-type-examination Certificates without signature and official stamp shall not be valid. The certificates may be circulated only without alteration. Extracts or alterations are subject to approval by the Physikalisch-Technische Bundesanstalt.
In case of dispute, the German text shall prevail.

Physikalisch-Technische Bundesanstalt • Bundesallee 100 • 38116 Braunschweig, Germany

## 2. SUPPLEMENT TO EC-TYPE-EXAMINATION CERTIFICATE PTB 00 ATEX 2048 X

Table 2: Application as category-2-apparatus

| type | Ci/ nF | Li/ µH | type 1 T6 | type 1 T5 | type 1 T4 | type 1 T3 | type 1 T2-T1 | type 2 T6 | type 2 T5 | type 2 T4 | type 2 T3 | type 2 T2-T1 | type 3 T6 | type 3 T5 | type 3 T4 | type 3 T3 | type 3 T2-T1 | type 4 T6 | type 4 T5 | type 4 T4 | type 4 T3 | type 4 T2-T1 |
|---|---|---|---|---|---|---|---|---|---|---|---|---|---|---|---|---|---|---|---|---|---|---|
| NCB1,5...M...N0... | 90 | 100 | 74 | 89 | 100 | 100 | 100 | 69 | 84 | 100 | 100 | 100 | 51 | 66 | 85 | 85 | 85 | 39 | 54 | 67 | 67 | 67 |
| NCB2-12GK...-N0... | 90 | 100 | 73 | 88 | 100 | 100 | 100 | 69 | 84 | 100 | 100 | 100 | 51 | 66 | 80 | 80 | 80 | 39 | 54 | 61 | 61 | 61 |
| NCB2-12GM...-N0... | 90 | 100 | 76 | 91 | 100 | 100 | 100 | 73 | 88 | 100 | 100 | 100 | 62 | 77 | 81 | 81 | 81 | 54 | 63 | 63 | 63 | 63 |
| NCN4-12GK...-N0... | 95 | 100 | 73 | 88 | 100 | 100 | 100 | 69 | 84 | 100 | 100 | 100 | 51 | 66 | 80 | 80 | 80 | 39 | 54 | 61 | 61 | 61 |
| NCN4-12GM...-N0... | 95 | 100 | 76 | 91 | 100 | 100 | 100 | 73 | 88 | 100 | 100 | 100 | 62 | 77 | 81 | 81 | 81 | 54 | 63 | 63 | 63 | 63 |
| NCB5-18GK...-N0... | 95 | 100 | 73 | 88 | 100 | 100 | 100 | 69 | 84 | 100 | 100 | 100 | 51 | 66 | 80 | 80 | 80 | 39 | 54 | 61 | 61 | 61 |
| NCB5-18GM...-N0... | 95 | 100 | 76 | 91 | 100 | 100 | 100 | 73 | 88 | 100 | 100 | 100 | 62 | 77 | 81 | 81 | 81 | 54 | 63 | 63 | 63 | 63 |
| NCN8-18GK...-N0... | 95 | 100 | 73 | 88 | 100 | 100 | 100 | 69 | 84 | 100 | 100 | 100 | 51 | 66 | 80 | 80 | 80 | 39 | 54 | 61 | 61 | 61 |
| NCN8-18GM...-N0... | 95 | 100 | 76 | 91 | 100 | 100 | 100 | 73 | 88 | 100 | 100 | 100 | 62 | 77 | 81 | 81 | 81 | 54 | 63 | 63 | 63 | 63 |
| NCB10-30GK...-N0... | 105 | 100 | 73 | 88 | 100 | 100 | 100 | 69 | 84 | 100 | 100 | 100 | 51 | 66 | 80 | 80 | 80 | 39 | 54 | 61 | 61 | 61 |
| NCB10-30GM...-N0... | 105 | 100 | 76 | 91 | 100 | 100 | 100 | 73 | 88 | 100 | 100 | 100 | 62 | 77 | 81 | 81 | 81 | 54 | 63 | 63 | 63 | 63 |
| NCN15-30GK...-N0... | 110 | 100 | 73 | 88 | 100 | 100 | 100 | 69 | 84 | 100 | 100 | 100 | 51 | 66 | 80 | 80 | 80 | 39 | 54 | 61 | 61 | 61 |
| NCN15-30GM...-N0... | 110 | 100 | 76 | 91 | 100 | 100 | 100 | 73 | 88 | 100 | 100 | 100 | 62 | 77 | 81 | 81 | 81 | 54 | 63 | 63 | 63 | 63 |
| NJ 0,2-10GM-N... | 20 | 50 | 73 | 88 | 100 | 100 | 100 | 68 | 83 | 100 | 100 | 100 | 49 | 64 | 67 | 67 | 67 | 36 | 42 | 42 | 42 | 42 |
| NJ 0,8-4,5-N... | 30 | 50 | 73 | 88 | 100 | 100 | 100 | 68 | 83 | 100 | 100 | 100 | 49 | 64 | 67 | 67 | 67 | 36 | 42 | 42 | 42 | 42 |
| NJ 0,8-5GM-N... | 30 | 50 | 73 | 88 | 100 | 100 | 100 | 68 | 83 | 100 | 100 | 100 | 49 | 64 | 67 | 67 | 67 | 36 | 42 | 42 | 42 | 42 |
| NJ 1,5-6,5...-N... | 30 | 50 | 73 | 88 | 100 | 100 | 100 | 68 | 83 | 100 | 100 | 100 | 49 | 64 | 67 | 67 | 67 | 36 | 42 | 42 | 42 | 42 |
| NJ 1,5-10GM-N-Y... | 20 | 50 | 73 | 88 | 100 | 100 | 100 | 68 | 83 | 100 | 100 | 100 | 49 | 64 | 67 | 67 | 67 | 36 | 42 | 42 | 42 | 42 |
| NJ 1,5-8GM-N... | 30 | 50 | 73 | 88 | 100 | 100 | 100 | 68 | 83 | 100 | 100 | 100 | 49 | 64 | 67 | 67 | 67 | 36 | 42 | 42 | 42 | 42 |
| NJ 1,5-8-N... | 20 | 50 | 73 | 88 | 100 | 100 | 100 | 68 | 83 | 100 | 100 | 100 | 49 | 64 | 67 | 67 | 67 | 36 | 42 | 42 | 42 | 42 |
| NJ 1,5-18GM-N-D... | 50 | 60 | 76 | 91 | 100 | 100 | 100 | 73 | 88 | 100 | 100 | 100 | 62 | 77 | 81 | 81 | 81 | 54 | 63 | 63 | 63 | 63 |
| NJ 2-11-N... | 45 | 50 | 73 | 88 | 100 | 100 | 100 | 66 | 81 | 100 | 100 | 100 | 45 | 60 | 89 | 89 | 89 | 30 | 45 | 74 | 74 | 74 |
| NJ 2-11-N-G... | 30 | 50 | 76 | 91 | 100 | 100 | 100 | 73 | 88 | 100 | 100 | 100 | 62 | 77 | 81 | 81 | 81 | 54 | 63 | 63 | 63 | 63 |
| NJ 2-12GK-N... | 45 | 50 | 73 | 88 | 100 | 100 | 100 | 69 | 84 | 100 | 100 | 100 | 51 | 66 | 80 | 80 | 80 | 39 | 54 | 61 | 61 | 61 |
| NJ 2-12GM-N... | 30 | 50 | 76 | 91 | 100 | 100 | 100 | 73 | 88 | 100 | 100 | 100 | 62 | 77 | 81 | 81 | 81 | 54 | 63 | 63 | 63 | 63 |
| NJ 2-14GM-N... | 30 | 50 | 76 | 91 | 100 | 100 | 100 | 73 | 88 | 100 | 100 | 100 | 62 | 77 | 81 | 81 | 81 | 54 | 63 | 63 | 63 | 63 |
| NJ 2,5-14GM-N... | 30 | 50 | 76 | 91 | 100 | 100 | 100 | 73 | 88 | 100 | 100 | 100 | 62 | 77 | 81 | 81 | 81 | 54 | 63 | 63 | 63 | 63 |
| NJ 4-12GK-N... | 45 | 50 | 73 | 88 | 100 | 100 | 100 | 69 | 84 | 100 | 100 | 100 | 51 | 66 | 80 | 80 | 80 | 39 | 54 | 61 | 61 | 61 |
| NJ 4-14GK-N... | 45 | 50 | 73 | 88 | 100 | 100 | 100 | 69 | 84 | 100 | 100 | 100 | 51 | 66 | 80 | 80 | 80 | 39 | 54 | 61 | 61 | 61 |
| NJ 4-12GM-N... | 45 | 50 | 73 | 88 | 100 | 100 | 100 | 68 | 83 | 100 | 100 | 100 | 49 | 64 | 67 | 67 | 67 | 36 | 42 | 42 | 42 | 42 |




EC-type-examination Certificates without signature and official stamp shall not be valid. The certificates may be circulated only without alteration. Extracts or alterations are subject to approval by the Physikalisch-Technische Bundesanstalt.
In case of dispute, the German text shall prevail.

Physikalisch-Technische Bundesanstalt • Bundesallee 100 • 38116 Braunschweig, Germany

Continuation Table 2: Application as category-2-apparatus

| type | Ci/ | Li/ | type 1 | | | | | type 2 | | | | | type 3 | | | | | type 4 | | | | |
|---|---|---|---|---|---|---|---|---|---|---|---|---|---|---|---|---|---|---|---|---|---|---|
| | | | T6 | T5 | T4 | T3 | T2-T1 | T6 | T5 | T4 | T3 | T2-T1 | T6 | T5 | T4 | T3 | T2-T1 | T6 | T5 | T4 | T3 | T2-T1 |
| NJ 4-30GM-N-200... (oscillator) | 70 | 100 | 73 | 88 | 123 | 188 | 192 | 66 | 81 | 116 | 181 | 186 | 45 | 60 | 95 | 160 | 164 | 30 | 45 | 80 | 145 | 149 |
| NJ 4-30GM-N-200... (amplifier) | | | 73 | 88 | 100 | 100 | 100 | 66 | 81 | 100 | 100 | 100 | 45 | 60 | 89 | 89 | 89 | 30 | 45 | 74 | 74 | 74 |
| NJ 5-10-11-N... | 70 | 100 | 73 | 88 | 100 | 100 | 100 | 66 | 81 | 100 | 100 | 100 | 45 | 60 | 78 | 78 | 78 | 30 | 45 | 57 | 57 | 57 |
| NJ 5-11-N... | 45 | 50 | 72 | 87 | 100 | 100 | 100 | 65 | 80 | 100 | 100 | 100 | 42 | 57 | 82 | 82 | 82 | 26 | 41 | 63 | 63 | 63 |
| NJ 5-18GK-N... | 70 | 50 | 73 | 88 | 100 | 100 | 100 | 69 | 84 | 100 | 100 | 100 | 51 | 66 | 80 | 80 | 80 | 39 | 54 | 61 | 61 | 61 |
| NJ 5-18GK-N-150... | 70 | 50 | 73 | 88 | 124 | 150 | 150 | 69 | 84 | 119 | 150 | 150 | 51 | 66 | 101 | 150 | 150 | 39 | 54 | 89 | 136 | 136 |
| NJ 5-18GM-N... | 70 | 50 | 76 | 91 | 100 | 100 | 100 | 73 | 88 | 100 | 100 | 100 | 62 | 77 | 81 | 81 | 81 | 54 | 63 | 63 | 63 | 63 |
| NJ 6-22-N... | 130 | 100 | 73 | 88 | 100 | 100 | 100 | 69 | 84 | 100 | 100 | 100 | 51 | 66 | 80 | 80 | 80 | 39 | 54 | 61 | 61 | 61 |
| NJ 8-18GK-N... | 70 | 50 | 73 | 88 | 100 | 100 | 100 | 69 | 84 | 100 | 100 | 100 | 51 | 66 | 80 | 80 | 80 | 39 | 54 | 61 | 61 | 61 |
| NJ 8-18GK-N-150... | 70 | 50 | 73 | 88 | 124 | 150 | 150 | 69 | 84 | 119 | 150 | 150 | 51 | 66 | 101 | 150 | 150 | 39 | 54 | 89 | 136 | 136 |
| NJ 8-18GM-N... | 70 | 50 | 76 | 91 | 100 | 100 | 100 | 73 | 88 | 100 | 100 | 100 | 62 | 77 | 81 | 81 | 81 | 54 | 63 | 63 | 63 | 63 |
| NJ 10-22-N... | 130 | 100 | 73 | 88 | 100 | 100 | 100 | 69 | 84 | 100 | 100 | 100 | 51 | 66 | 80 | 80 | 80 | 39 | 54 | 61 | 61 | 61 |
| NJ 10-30GK...-N... | 140 | 100 | 73 | 88 | 100 | 100 | 100 | 69 | 84 | 100 | 100 | 100 | 51 | 66 | 80 | 80 | 80 | 39 | 54 | 61 | 61 | 61 |
| NJ 10-30GM-N... | 140 | 100 | 76 | 91 | 100 | 100 | 100 | 73 | 88 | 100 | 100 | 100 | 62 | 77 | 81 | 81 | 81 | 54 | 63 | 63 | 63 | 63 |
| NJ 15-30GK...-N... | 140 | 100 | 73 | 88 | 100 | 100 | 100 | 69 | 84 | 100 | 100 | 100 | 51 | 66 | 80 | 80 | 80 | 39 | 54 | 61 | 61 | 61 |
| NJ 15-30GK-N-150... | 140 | 100 | 73 | 88 | 124 | 150 | 150 | 69 | 84 | 119 | 150 | 150 | 51 | 66 | 101 | 150 | 150 | 39 | 54 | 89 | 136 | 136 |
| NJ 15-30GM-N... | 140 | 100 | 76 | 91 | 100 | 100 | 100 | 73 | 88 | 100 | 100 | 100 | 62 | 77 | 81 | 81 | 81 | 54 | 63 | 63 | 63 | 63 |
| NJ 25-50-N... | 150 | 140 | 73 | 88 | 100 | 100 | 100 | 69 | 84 | 100 | 100 | 100 | 51 | 66 | 80 | 80 | 80 | 39 | 54 | 61 | 61 | 61 |
| NJ 20-40-N... | 140 | 140 | 73 | 88 | 100 | 100 | 100 | 69 | 84 | 100 | 100 | 100 | 51 | 66 | 80 | 80 | 80 | 39 | 54 | 61 | 61 | 61 |




EC-type-examination Certificates without signature and official stamp shall not be valid. The certificates may be circulated only without alteration. Extracts or alterations are subject to approval by the Physikalisch-Technische Bundesanstalt.
In case of dispute, the German text shall prevail.

Physikalisch-Technische Bundesanstalt • Bundesallee 100 • 38116 Braunschweig, Germany

# Physikalisch-Technische Bundesanstalt

**Braunschweig und Berlin**

## 2. SUPPLEMENT TO EC-TYPE-EXAMINATION CERTIFICATE PTB 00 ATEX 2048 X

Special conditions

1. When the cylindrical inductive sensors , types NC... and NJ... are used in a temperature range between -60°C and -20 °C, they shall be protected against impact stress by installation into an additional housing.
2. The connection facilities of the cylindrical inductive sensors , types NC... and NJ... shall be installed as such that the degree of protection IP 20 according to IEC-Publikation 60529:1989 is met as a minimum.
3. For relationship between type of connected circuit, maximum permissible ambient temperature and temperature class as well as the effective internal reactances for the individual types of cylindrical inductive sensors reference is made to tables 1 & 2 of this 2nd supplement to EC-type certificate PTB 00 ATEX 2048 X.
4. Inadmissible electrostatic charge of parts of the metal housing shall be avoided with the following types of cylindrical inductive sensors. Dangerous electrostatic charge of parts of the metal housing can be avoided by grounding these parts. Very small parts of the metal housing (e.g. screws) do not need to be grounded.

NCB1,5...M...N0...
NCB2-12GM...-N0...
NCN4-12GM...-N0...
NCB5-18GM...-N0...
NCN8-18GM...-N0...
NCB10-30GM..-N0...
NCN15-30GM...-N0...
NJ 0,2-10GM-N...
NJ 0,8-4,5-N...
NJ 0,8-5GM-N...
NJ 1,5-6,5...-N...
NJ 1,5-10GM-N-Y...
NJ 1,5-8GM-N...
NJ 1,5-8-N...
NJ 1,5-18GM-N-D...
NJ 2-11-N-G...
NJ 2-12GM-N...
NJ 2-14GM-N...
NJ 2,5-14GM-N...
NJ 4-12GM-N...
NJ 4-30GM-N-200...
NJ 5-11-N-545...
NJ 5-11-N-G...
NJ 5-18GM-N...
NJ 6-22-N-G...
NJ 8-18GM-N...
NJ 10-22-N-G...
NJ 10-30GM-N...
NJ 15-30GM-N...

Test report: PTB Ex 04-23445

Zertifizierungsstelle Explosionsschutz
By order:

Dr.-Ing. U. Gerlach
Regierungsrat

Braunschweig, July 12, 2004



EC-type-examination Certificates without signature and official stamp shall not be valid. The certificates may be circulated only without alteration. Extracts or alterations are subject to approval by the Physikalisch-Technische Bundesanstalt.
In case of dispute, the German text shall prevail.

Physikalisch-Technische Bundesanstalt • Bundesallee 100 • 38116 Braunschweig, Germany

# Physikalisch-Technische Bundesanstalt

**Braunschweig und Berlin**

## 3. SUPPLEMENT

**according to Directive 94/9/EC Annex III.6**

## to EC-TYPE-EXAMINATION CERTIFICATE PTB 00 ATEX 2048 X

## (Translation)

Equipment: Cylindrical inductive sensors, types NC... and NJ...

Marking: **II 1 G EEx ia IIC T6**

Manufacturer: Pepperl + Fuchs GmbH

Address: Königsberger Allee 87, 68307 Mannheim, Germany

Description of supplements and modifications

In the future the cylindrical inductive sensors of type series NC... and NJ... may also be manufactured and operated according to the test documents listed in the test report PTB Ex 05-25204.

The modifications concern the extension of the type series NC... (new types for application as category-1-apparatus or as category-2-apparatus respectively), the internal construction (further examples of circuit diagrams, new types of LED´s and cast resin) as well as the extension of clause 4 of the "Special Conditions" for the new types of type series NC... .

The EC-type examination certificate is extended for the following types of cylindrical inductive sensors:

NCB4-12GM...-N0...
NCB8-18GM...-N0...
NCB15-30GM...-N0...

The "Electrical Data" listed below apply for these types.

All other specifications apply also for this 3rd supplement without changes.



EC-type-examination Certificates without signature and official stamp shall not be valid. The certificates may be circulated only without alteration. Extracts or alterations are subject to approval by the Physikalisch-Technische Bundesanstalt.
In case of dispute, the German text shall prevail.

Physikalisch-Technische Bundesanstalt • Bundesallee 100 • 38116 Braunschweig, Germany

## 3. SUPPLEMENT TO EC-TYPE-EXAMINATION CERTIFICATE PTB 00 ATEX 2048 X

Electrical data

Evaluation and supply circuit..... type of protection Intrinsic Safety EEx ia IIC/IIB
or EEx ib IIC/IIB
only for connection to certified intrinsically safe circuits
Maximum values:

| type 1 | type 2 | type 3 | type 4 |
|---|---|---|---|
| $U_i$ = 16 V | $U_i$ = 16 V | $U_i$ = 16 V | $U_i$ = 16 V |
| $I_i$ = 25 mA | $I_i$ = 25 mA | $I_i$ = 52 mA | $I_i$ = 76 mA |
| $P_i$ = 34 mW | $P_i$ = 64 mW | $P_i$ = 169 mW | $P_i$ = 242 mW |

With the application as category-1-apparatus it is to be considered that the evaluation and supply circuit has to comply with type of protection Intrinsic Safety EEx ia IIC/IIB.

For relationship between type of connected circuit, maximum permissible ambient temperature for use as category-1-apparatus resp. as category-2-apparatus and temperature class as well as the effective internal reactances for the individual types of cylindrical inductive sensors, reference is made to the following tables:



EC-type-examination Certificates without signature and official stamp shall not be valid. The certificates may be circulated only without alteration. Extracts or alterations are subject to approval by the Physikalisch-Technische Bundesanstalt.
In case of dispute, the German text shall prevail.

Physikalisch-Technische Bundesanstalt • Bundesallee 100 • 38116 Braunschweig, Germany

## 3. SUPPLEMENT TO EC-TYPE-EXAMINATION CERTIFICATE PTB 00 ATEX 2048 X

Table 1: Application as category 1-equipment

| type | Ci/ nF | Li/ µH | type 1 | | | | | | type 2 | | | | | | type 3 | | | | | | type 4 | | | | | |
|---|---|---|---|---|---|---|---|---|---|---|---|---|---|---|---|---|---|---|---|---|---|---|---|---|---|---|
| | | | T6 | T5 | T4 | T3 | T2-T1 | | T6 | T5 | T4 | T3 | T2-T1 | | T6 | T5 | T4 | T3 | T2-T1 | | T6 | T5 | T4 | T3 | T2-T1 | |
| NCB4-12GM...-N0... | 120 | 50 | 57 | 69 | 97 | 97 | 97 | | 52 | 64 | 92 | 92 | 92 | | 34 | 46 | 74 | 74 | 74 | | 22 | 34 | 52 | 52 | 52 | |
| NCB8-18GM...-N0... | 120 | 50 | 57 | 69 | 97 | 97 | 97 | | 52 | 64 | 92 | 92 | 92 | | 34 | 46 | 74 | 74 | 74 | | 22 | 34 | 52 | 52 | 52 | |
| NCB15-30GM...-N0... | 120 | 150 | 57 | 69 | 97 | 97 | 97 | | 52 | 64 | 92 | 92 | 92 | | 34 | 46 | 74 | 74 | 74 | | 22 | 34 | 52 | 52 | 52 | |

Table 2: Application as category 2-equipment

| type | Ci/ nF | Li/ µH | type 1 | | | | | | type 2 | | | | | | type 3 | | | | | | type 4 | | | | | |
|---|---|---|---|---|---|---|---|---|---|---|---|---|---|---|---|---|---|---|---|---|---|---|---|---|---|---|
| | | | T6 | T5 | T4 | T3 | T2-T1 | | T6 | T5 | T4 | T3 | T2-T1 | | T6 | T5 | T4 | T3 | T2-T1 | | T6 | T5 | T4 | T3 | T2-T1 | |
| NCB4-12GM...-N0... | 120 | 50 | 74 | 89 | 100 | 100 | 100 | | 69 | 84 | 100 | 100 | 100 | | 51 | 66 | 74 | 74 | 74 | | 39 | 52 | 52 | 52 | 52 | |
| NCB8-18GM...-N0... | 120 | 50 | 74 | 89 | 100 | 100 | 100 | | 69 | 84 | 100 | 100 | 100 | | 51 | 66 | 74 | 74 | 74 | | 39 | 52 | 52 | 52 | 52 | |
| NCB15-30GM...-N0... | 120 | 150 | 74 | 89 | 100 | 100 | 100 | | 69 | 84 | 100 | 100 | 100 | | 51 | 66 | 74 | 74 | 74 | | 39 | 52 | 52 | 52 | 52 | |




EC-type-examination Certificates without signature and official stamp shall not be valid. The certificates may be circulated only without alteration. Extracts or alterations are subject to approval by the Physikalisch-Technische Bundesanstalt.
In case of dispute, the German text shall prevail.

Physikalisch-Technische Bundesanstalt • Bundesallee 100 • 38116 Braunschweig, Germany

# Physikalisch-Technische Bundesanstalt

**Braunschweig und Berlin**

## 3. SUPPLEMENT TO EC-TYPE-EXAMINATION CERTIFICATE PTB 00 ATEX 2048 X

Special conditions

1. When the cylindrical inductive sensors , types NC... and NJ... are used in a temperature range between -60 °C and -20 °C, they shall be protected against impact stress by installation into an additional housing.
2. The connection facilities of the cylindrical inductive sensors , types NC... and NJ... shall be installed as such that the degree of protection IP 20 according to IEC-Publikation 60529:1989 is met as a minimum.
3. For relationship between type of connected circuit, maximum permissible ambient temperature and temperature class as well as the effective internal reactances for the individual types of cylindrical inductive sensors reference is made to tables 1 & 2 of the 2nd supplement and – for the new types – to tables 1 & 2 of this 3rd supplement to EC-type certificate PTB 00 ATEX 2048 X.
4. Inadmissible electrostatic charge of parts of the metal housing shall be avoided for the following types of cylindrical inductive sensors. Dangerous electrostatic charge of parts of the metal housing can be avoided by grounding these parts. Very small parts of the metal housing (e.g. screws) do not need to be grounded.

NCB1,5...M...N0...
NCB2-12GM...-N0...
NCB4-12GM...-N0...
NCB5-18GM...-N0...
NCB8-18GM...-N0...
NCB10-30GM..-N0...
NCB15-30GM...-N0...
NCN4-12GM...-N0...
NCN8-18GM...-N0...
NCN15-30GM...-N0...
NJ 0,2-10GM-N...
NJ 0,8-4,5-N...
NJ 0,8-5GM-N...
NJ 1,5-6,5...-N...
NJ 1,5-10GM-N-Y...
NJ 1,5-8GM-N...
NJ 1,5-8-N...
NJ 1,5-18GM-N-D...
NJ 2-11-N-G...
NJ 2-12GM-N...
NJ 2-14GM-N...
NJ 2,5-14GM-N...
NJ 4-12GM-N...
NJ 4-30GM-N-200...
NJ 5-11-N-545...
NJ 5-11-N-G...
NJ 5-18GM-N...
NJ 6-22-N-G...
NJ 8-18GM-N...
NJ 10-22-N-G...
NJ 10-30GM-N...
NJ 15-30GM-N...

Test report: PTB Ex 05-25204

Zertifizierungsstelle Explosionsschutz
By order:

Dr.-Ing. U. Johannsmeyer
Direktor und Professor

Braunschweig, October 7, 2005



EC-type-examination Certificates without signature and official stamp shall not be valid. The certificates may be circulated only without alteration. Extracts or alterations are subject to approval by the Physikalisch-Technische Bundesanstalt.
In case of dispute, the German text shall prevail.

Physikalisch-Technische Bundesanstalt • Bundesallee 100 • 38116 Braunschweig, Germany

# Prüf- und Zertifizierungsstelle

# ZELM Ex

(1) # EG-Baumusterprüfbescheinigung

(2) Geräte und Schutzsysteme zur bestimmungsgemäßen Verwendung in explosionsgefährdeten Bereichen – **Richtlinie 94/9/EG**

(3) EG-Baumusterprüfbescheinigungsnummer

## ZELM 03 ATEX 0128 X

(4) Gerät: Näherungssensoren Typen CB..., CC..., CJ..., NC..., NJ..., SC..., SJ...

(5) Hersteller: Pepperl + Fuchs GmbH

(6) Anschrift: D-68307 Mannheim

(7) Die Bauart dieses Gerätes sowie die verschiedenen zulässigen Ausführungen sind in der Anlage zu dieser Baumusterprüfbescheinigung festgelegt.

(8) Die Prüf- und Zertifizierungsstelle ZELM Ex bescheinigt als benannte Stelle Nr. 0820 nach Artikel 9 der Richtlinie des Rates der Europäischen Gemeinschaften vom 23. März 1994 (94/9/EG) die Erfüllung der grundlegenden Sicherheits- und Gesundheitsanforderungen für die Konzeption und den Bau von Geräten und Schutzsystemen zur bestimmungsgemäßen Verwendung in explosionsgefährdeten Bereichen gemäß Anhang II der Richtlinie.

Die Ergebnisse der Prüfung sind in dem vertraulichen Prüfbericht Nr. ZELM Ex 0840217167 festgelegt.

(9) Die grundlegenden Sicherheits- und Gesundheitsanforderungen werden erfüllt durch Übereinstimmung mit

**prEN 61241-0: 2002** **31H/143/CD (IEC 61241-11): 2002**

(10) Falls das Zeichen "X" hinter der Bescheinigungsnummer steht, wird auf besondere Bedingungen für die sichere Anwendung des Gerätes in der Anlage zu dieser Bescheinigung hingewiesen.

(11) Diese EG-Baumusterprüfbescheinigung bezieht sich nur auf Konstruktion, Überprüfung und Tests des spezifizierten Gerätes oder Schutzsystems in Übereinstimmung mit Richtlinie 94/9/EG. Weitere Anforderungen der Richtlinie können für das Herstellungsverfahren und die Lieferung dieses Gerätes oder Schutzsystems gelten. Diese sind von vorliegender Bescheinigung nicht abgedeckt.

(12) Die Kennzeichnung des Gerätes muß die folgenden Angaben enthalten:

Ex **II 1 D Ex iaD 20 T... °C**

Zertifizierungsstelle **ZELM Ex**

Dipl.-Ing. Harald Zelm

Zertifizierungsstelle ZELM Ex

Braunschweig, 28.03.2003



EG-Baumusterprüfbescheinigungen ohne Unterschrift und ohne Stempel haben keine Gültigkeit.
Diese EG-Baumusterprüfbescheinigung darf nur unverändert weiterverbreitet werden.
Auszüge oder Änderungen bedürfen der Genehmigung der Prüf- und Zertifizierungsstelle ZELM Ex

Prüf- und Zertifizierungsstelle ZELM Ex • Siekgraben 56 • D-38124 Braunschweig

(13) # Anlage

(14) **EG-Baumusterprüfbescheinigung ZELM 03 ATEX 0128 X**

(15) Beschreibung des Gerätes

Die induktiven und kapazitiven Sensoren der Typen CB..., CC..., CJ..., NC..., NJ..., SC..., SJ... dienen zur Umformung von Wegänderungen in elektrische Signale im explosionsgefährdeten Bereich der Kategorie 1 D, 2 D. bzw. 3 D.
Die induktiven und kapazitiven Sensoren können auch in der Trennwand zwischen den Zonen 20 und 21 oder 21 und 22 montiert werden.
Sie dürfen mit bescheinigten eigensicheren Stromkreisen betrieben werden. Die Kategorie der Sensoren richtet sich nach dem angeschlossenen speisenden Stromkreis.

Die induktiven und kapazitiven Sensoren bestehen aus einem Kunststoff- oder Metallgehäuse und sind mit Gießharz ausgegossen. Der Anschluss der Versorgungsspannung erfolgt über Kabel, Litze, Klemm- oder Steckanschluss.

Die Punkte in der Typenbezeichnung werden zur Unterscheidung nicht sicherheitsrelevanter Ausführungsunterschiede durch Ziffern und/oder Buchstaben ersetzt.

Elektrische Daten

Auswerte- und Versorgungsstromkreis: in Zündschutzart Eigensicherheit Ex iaD bzw. Ex ibD oder EEx ia IIB bzw. EEx ib IIB
nur zum Anschluss an bescheinigte eigensichere Stromkreise,

Höchstwerte:

| | Typ 1 | Typ 2 | Typ 3 |
|---|---|---|---|
| $U_i$ | 16 V | 16 V | 16 V |
| $I_i$ | 25 mA | 25 mA | 52 mA |
| $P_i$ | 34 mW | 64 mW | 169 mW |

untere Grenze der Umgebungstemperatur: gem. Tabelle 2

Der Zusammenhang zwischen dem Typ des angeschlossenen Stromkreises, der höchstzulässigen Umgebungstemperatur und der Oberflächentemperatur ist der folgenden Tabelle 1 zu entnehmen:

**Tabelle 1**

| Typ | Typ 1 Ui = 16 V Ii = 25 mA Pi = 34 mW | | | Typ 2 Ui = 16 V Ii = 25 mA Pi = 64 mW | | | Typ 3 Ui = 16 V Ii = 52 mA Pi = 169 mW | | |
|---|---|---|---|---|---|---|---|---|---|
| | Tu=40°C | Tu=70°C | Tu=100°C | Tu=40°C | Tu=70°C | Tu=100°C | Tu=40°C | Tu=70°C | Tu=100°C |
| | T | T | T | T | T | T | T | T | T |
| CB..., CC..., CJ... | 44 | 73 | --------- | 48 | 76 | --------- | 60 | 85 | --------- |
| NJ10-22-N-E93-Y106925 | 44 | 73 | --------- | 48 | 76 | --------- | 60 | 85 | --------- |
| NJ10-22-N-E93-Y30629 | 44 | 73 | --------- | 48 | 76 | --------- | 60 | 85 | --------- |
| NJ10-22-N-E93-Y52737 | 44 | 73 | --------- | 48 | 76 | --------- | 60 | 85 | --------- |
| NC..., NJ..., SC..., SJ... | 44 | 73 | 102 | 48 | 76 | 103 | 60 | 85 | 108 |

Tu: obere Grenze der Umgebungstemperatur



EG-Baumusterprüfbescheinigungen ohne Unterschrift und ohne Stempel haben keine Gültigkeit.
Diese EG-Baumusterprüfbescheinigung darf nur unverändert weiterverbreitet werden.
Auszüge oder Änderungen bedürfen der Genehmigung der Prüf- und Zertifizierungsstelle ZELM Ex

Prüf- und Zertifizierungsstelle ZELM Ex • Siekgraben 56 • D-38124 Braunschweig

## Anlage zur EG-Baumusterprüfbescheinigung ZELM 03 ATEX 0128 X

Die wirksamen inneren Kapazitäten und Induktivitäten für die einzelnen Sensortypen sind der folgenden Tabelle 2 zu entnehmen:

**Tabelle 2**

| Typ | Ci/ nF | Li/ µH | $T_{Umin}$ / °C | Typ | Ci/ nF | Li/ µH | $T_{Umin}$ / °C |
|---|---|---|---|---|---|---|---|
| CBN2-F46-N... | 45 | 0 | - 25 | NJ 2-V3-N... | 40 | 50 | - 25 |
| CCN2-F46A-N... | 45 | 0 | - 25 | NJ 15+U.+N... | 140 | 130 | - 25 |
| CBN5-F46-N... | 45 | 0 | - 25 | NJ 20+U.+N... | 150 | 130 | - 25 |
| CCN5-F46A-N... | 45 | 0 | - 25 | NJ 30+U.+N... | 160 | 130 | - 25 |
| CBN10-F46-N... | 45 | 0 | - 25 | NJ 40+...+N... | 180 | 130 | - 25 |
| CCN10-F46A-N... | 45 | 0 | - 25 | NJ 50-FP-N... | 320 | 360 | - 25 |
| CCB10-30GM...-N... | 155 | 0 | - 25 | SC2-N0... | 150 | 150 | - 25 |
| CJ 1-12GK-N... | 60 | 0 | - 25 | SC3,5-N0-Y... | 150 | 150 | - 25 |
| CJ 2-18GK-N... | 60 | 0 | - 25 | SC3,5...-N0... | 150 | 150 | - 25 |
| CJ 4-12GK-N... | 60 | 0 | - 25 | SJ 1,8-N-Y... | 30 | 100 | - 25 |
| CJ 6-18GK-N... | 60 | 0 | - 25 | SJ 2,2-N... | 30 | 100 | - 25 |
| CJ 15-40-N... | 140 | 0 | - 25 | SJ 2-N... | 30 | 100 | - 25 |
| CJ 40-FP-N-... | 145 | 0 | - 25 | SJ 3,5-...-N... | 50 | 250 | - 25 |
| NCB1,5...M...N0... | 90 | 100 | - 25 | SJ 5-...-N... | 50 | 250 | - 25 |
| NCB2-12GM...-N0... | 90 | 100 | - 25 | SJ 5-K... | 50 | 550 | - 25 |
| NCN4-12GM...-N0... | 95 | 100 | - 25 | SJ 10-N... | 50 | 1000 | - 25 |
| NCB5-18GM...-N0... | 95 | 100 | - 25 | SJ 15-N... | 150 | 1200 | - 25 |
| NCN8-18GM...-N0... | 95 | 100 | - 25 | SJ 30-N... | 150 | 1250 | - 25 |
| NCB10-30GM..-N0... | 105 | 100 | - 25 | NJ 2-11-SN... | 50 | 150 | - 40 |
| NCN15-30GM...-N0... | 110 | 100 | - 25 | NJ 2-11-SN-G... | 50 | 150 | - 40 |
| NJ 1,5-6,5...-N | 30 | 50 | - 25 | NJ 2-12GK-SN... | 50 | 150 | - 40 |
| NJ 1,5-8-N... | 20 | 50 | - 25 | NJ 3-18GK-S1N... | 70 | 200 | - 25 |
| NJ 2-11-N... | 45 | 50 | - 25 | NJ 4-12GK-SN... | 70 | 150 | - 40 |
| NJ 2-11-N-G... | 30 | 50 | - 25 | NJ 5-18GK-SN... | 120 | 200 | - 40 |
| NJ 5-11-N... | 45 | 50 | - 25 | NJ 5-30GK-S1N... | 100 | 200 | - 25 |
| NJ10-22-N... | 130 | 100 | - 25 | NJ 6-22-SN... | 110 | 150 | - 40 |
| NJ10-22-N-E93-Y106925 | 130 | 100 | - 40 | NJ 6-22-SN-G... | 110 | 150 | - 40 |
| NJ10-22-N-E93-Y30629 | 130 | 100 | - 25 | NJ 6S1+U.+N... | 180 | 150 | - 40 |
| NJ10-22-N-E93-Y52737 | 130 | 100 | - 25 | NJ 8-18GK-SN... | 120 | 200 | - 40 |
| NCB2-F1-N0... | 90 | 100 | - 25 | NJ 10-30GK-SN... | 120 | 150 | - 40 |
| NCB2-V3-N0... | 100 | 100 | - 25 | NJ 15-30GK-SN... | 120 | 180 | - 40 |
| NCN4-V3-N0... | 100 | 100 | - 25 | NJ 15S+U.+N... | 180 | 150 | - 40 |
| NCB15+U...+N0... | 110 | 160 | - 25 | NJ 20S+U.+N... | 200 | 150 | - 40 |
| NCB40-FP-N0.. | 220 | 360 | - 25 | NJ 40-FP-SN... | 370 | 300 | - 40 |
| NCN15-M...-N0.. | 100 | 100 | - 25 | SJ 2-SN... | 30 | 100 | - 40 |
| NCN20+U...+N0... | 110 | 160 | - 25 | SJ 2-S1N... | 30 | 100 | - 25 |
| NCN30+U...+N0... | 110 | 160 | - 25 | SJ 3,5-S1N... | 30 | 100 | - 25 |
| NCN40+U...+N0... | 120 | 130 | - 25 | SJ 3,5-SN... | 30 | 100 | - 40 |
| NCN50-FP-N0... | 220 | 360 | - 25 | | | | |

Die angegebenen Werte für die inneren Kapazitäten und Induktivitäten berücksichtigen bereits ein Anschlusskabel von 10 m Länge.



EG-Baumusterprüfbescheinigungen ohne Unterschrift und ohne Stempel haben keine Gültigkeit.
Diese EG-Baumusterprüfbescheinigung darf nur unverändert weiterverbreitet werden.
Auszüge oder Änderungen bedürfen der Genehmigung der Prüf- und Zertifizierungsstelle ZELM Ex

Prüf- und Zertifizierungsstelle ZELM Ex • Siekgraben 56 • D-38124 Braunschweig

## Anlage zur EG-Baumusterprüfbescheinigung ZELM 03 ATEX 0128 X

Hinweise :

Die Betriebsanleitung ist zu beachten, insbesondere die Hinweise zu Einbaubedingungen, Versorgungsstromkreis und Einsatztemperaturen.

(16) Prüfbericht Nr.

ZELM Ex 0840217167

(17) Besondere Bedingungen

1. Der Zusammenhang zwischen dem Typ des angeschlossenen Stromkreises, der zulässigen Umgebungstemperatur und der Oberflächentemperatur sowie den wirksamen inneren Reaktanzen für die einzelnen Typen ist den Tabellen unter Punkt (15) zu entnehmen.
2. Die Versorgung der Sensoren hat über separat bescheinigte eigensichere Stromkreise zu erfolgen. Wegen möglicher Zündgefahren, die aufgrund von Fehlern und/oder transienten Strömen im Potenzialausgleichsystem entstehen können, ist eine galvanische Trennung im Versorgungs- und Signalstromkreis zu bevorzugen. Zugehörige Betriebsmittel ohne galvanische Trennung dürfen nur eingesetzt werden, wenn die entsprechenden Anforderungen nach IEC 60079-14 eingehalten werden.
3. Betriebsbedingte elektrostatische Aufladung durch strömende Medien oder maschinelle Reibung muss ausgeschlossen werden, wenn die dieser Aufladung ausgesetzte Kunststoff-Gehäusefläche größer als 100 cm² ist (Gefahr von Büschelentladungen).
4. Für die Sensortypen

| | | | |
|---|---|---|---|
| CJ 40-FP-N-... | NCN40+U...+N0... | NJ 40+U+...+N... | SJ 30-N... |
| NCB40-FP-N0... | NCN50-FP-N0... | NJ 50-FP-N... | NJ 40-FP-SN... |

ist bei Einsatzfällen mit zu erwartender hoher Aufladung (z.B. el.stat. Lackierung, Folienherstellung, Staubförderung, maschinelle Reibvorgänge) die dieser Aufladung ausgesetzte Kunststoff-Gehäuseoberfläche durch Einbaumaßnahmen auf etwa 15 cm² zu begrenzen (Gefahr von Gleitstielbüschelentladungen).

5. Gefährliche elektrostatische Aufladungen von Metall-Gehäuseteilen sind zu vermeiden. Dies kann durch Einbeziehung in den örtlichen Potentialausgleich erfolgen, wobei sehr kleine Metallteile (z.B. Schrauben) nicht geerdet werden müssen.
6. Die Dichtheit im Sinne von zonentrennenden Maßnahmen beim Einbau in die Trennwand zwischen verschiedenen Zonen ist nicht Gegenstand dieser Bescheinigung und ist bei der Errichtung durch geeignete Maßnahmen sicher zu stellen.



EG-Baumusterprüfbescheinigungen ohne Unterschrift und ohne Stempel haben keine Gültigkeit.
Diese EG-Baumusterprüfbescheinigung darf nur unverändert weiterverbreitet werden.
Auszüge oder Änderungen bedürfen der Genehmigung der Prüf- und Zertifizierungsstelle ZELM Ex

Prüf- und Zertifizierungsstelle ZELM Ex • Siekgraben 56 • D-38124 Braunschweig

## Anlage zur EG-Baumusterprüfbescheinigung ZELM 03 ATEX 0128 X

(18) Grundlegende Sicherheits- und Gesundheitsanforderungen

Gemäß Richtlinie 94/9/EG durch vorgenannte Normenentwürfe erfüllt. Die Sensoren entsprechen den Normen EN 50014 und EN 50020. Gleichzeitig bestehen für den Staubbereich noch keine harmonisierten europäischen Normen.

Zertifizierungsstelle **ZELM Ex**

Zertifizierungs- und Prüf- stelle ZELM Ex

Braunschweig, 28.03.2003

Dipl.-Ing. Harald Zelm



EG-Baumusterprüfbescheinigungen ohne Unterschrift und ohne Stempel haben keine Gültigkeit.
Diese EG-Baumusterprüfbescheinigung darf nur unverändert weiterverbreitet werden.
Auszüge oder Änderungen bedürfen der Genehmigung der Prüf- und Zertifizierungsstelle ZELM Ex

# Prüf- und Zertifizierungsstelle

# ZELM Ex

# 1. Ergänzung

(Ergänzung gemäß EG-Richtlinie 94/9 Anhang III Ziffer 6)

## zur EG-Baumusterprüfbescheinigung

## ZELM 03 ATEX 0128 X

(4) Gerät: **Näherungssensoren Typen CB..., CC..., CJ..., NC..., NJ..., SC..., SJ...**

(5) Hersteller: **Pepperl + Fuchs GmbH**

(6) Anschrift: **D-68307 Mannheim**

Beschreibung der Ergänzung

Die induktiven und kapazitiven Sensoren der Typen CB..., CC..., CJ..., NC..., NJ..., SC..., SJ... werden um einige alternative Ausführungen ergänzt. Die Typenbezeichnungen dieser Ausführungen lauten:

NJ 0,8-5GM-N...
NJ 2-12GK-N...
NJ 2-12GM-N...
NJ 4-12GK-N...
NJ 4-12GM-N...
NJ 5-18GK-N...
NJ 5-18GM-N...
NJ 8-18GK-N...
NJ 8-18GM-N...
NJ 10-30GK-N...
NJ 10-30GM-N...
NJ 15-30GK-N...
NJ 15-30GM-N...
NJ 4-12GK-SN-Y...

Kennzeichnung **II 1 D Ex iaD 20 T... °C**

Die maximale Oberflächentemperatur des Gehäuses „..." ist der Tabelle 1 zu entnehmen.

untere Grenze der Umgebungstemperatur: gem. Tabelle 2

Elektrische Daten :

Der Zusammenhang zwischen dem Typ des angeschlossenen Stromkreises, der höchstzulässigen Umgebungstemperatur und der Oberflächentemperatur ist der folgenden Tabelle 1 zu entnehmen:

**Tabelle 1 (als Ergänzung zur Tabelle 1 der EG-Baumusterprüfbescheinigung ZELM 03 ATEX 0128 X)**

| | Typ 1 | | | | Typ 2 | | | | Typ 3 | | | |
|---|---|---|---|---|---|---|---|---|---|---|---|---|
| | Ui = 16 V | | | | Ui = 16 V | | | | Ui = 16 V | | | |
| | Ii = 25 mA | | | | Ii = 25 mA | | | | Ii = 52 mA | | | |
| | Pi = 34 mW | | | | Pi = 64 mW | | | | Pi = 169 mW | | | |
| Typ | $T_u$= 40°C | $T_u$= 60°C | $T_u$= 70°C | $T_u$= 100°C | $T_u$= 40°C | $T_u$= 60°C | $T_u$= 70°C | $T_u$= 100°C | $T_u$= 40°C | $T_u$= 60°C | $T_u$= 70°C | $T_u$= 100°C |
| | T | T | T | T | T | T | T | T | T | T | T | T |
| NJ 4-12GK-SN-Y... | 44 | 64 | 73 | ---------- | 48 | 67 | 76 | ---------- | 60 | 77 | 85 | ---------- |
| NC..., NJ..., SC..., SJ... | 44 | 64 | 73 | 102 | 48 | 67 | 76 | 103 | 60 | 77 | 85 | 108 |

$T_u$: obere Grenze der Umgebungstemperatur;



EG-Baumusterprüfbescheinigungen ohne Unterschrift und ohne Stempel haben keine Gültigkeit.
Diese EG-Baumusterprüfbescheinigung darf nur unverändert weiterverbreitet werden.
Auszüge oder Änderungen bedürfen der Genehmigung der Prüf- und Zertifizierungsstelle ZELM Ex

Prüf- und Zertifizierungsstelle ZELM Ex • Siekgraben 56 • D-38124 Braunschweig

# Prüf- und Zertifizierungsstelle

# ZELM Ex

## 1. Ergänzung zur EG-Baumusterprüfbescheinigung ZELM 03 ATEX 0128 X

**Tabelle 2 (als Ergänzung zur Tabelle 2 der EG-Baumusterprüfbescheinigung ZELM 03 ATEX 0128 X)**

| Typ | Ci / nF | Li / µH | $T_{Umin}$ / °C | Typ | Ci / nF | Li / µH | $T_{Umin}$ / °C |
|---|---|---|---|---|---|---|---|
| NJ 0,8-5GM-N... | 30 | 50 | - 25 | NJ 8-18GK-N... | 70 | 50 | - 25 |
| NJ 2-12GK-N... | 45 | 50 | - 25 | NJ 8-18GM-N... | 70 | 50 | - 25 |
| NJ 2-12GM-N... | 30 | 50 | - 25 | NJ 10-30GK-N... | 140 | 100 | - 25 |
| NJ 4-12GK-N... | 45 | 50 | - 25 | NJ 10-30GM-N... | 140 | 100 | - 25 |
| NJ 4-12GM-N... | 45 | 50 | - 25 | NJ 15-30GK-N... | 140 | 100 | - 25 |
| NJ 5-18GK-N... | 70 | 50 | - 25 | NJ 15-30GM-N... | 140 | 100 | - 25 |
| NJ 5-18GM-N... | 70 | 50 | - 25 | NJ 4-12GK-SN-Y... | 70 | 150 | - 45 |

Die angegebenen Werte für die inneren Kapazitäten und Induktivitäten berücksichtigen bereits ein Anschlusskabel von 10 m Länge.

Prüfbericht Nr.

ZELM Ex 0110419268

Besondere Bedingungen

Es gelten weiterhin die Besonderen Bedingungen der EG-Baumusterprüfbescheinigung ZELM 03 ATEX 0128 X. Zusätzlich gilt:

1. Bei Betrieb in einem Stromkreis des Schutzniveaus ib IIB bzw. ibD ist ein Einsatz im Bereich bzw. zwischen Bereichen, welche die Kategorie 1 erfordern nicht zulässig.

Grundlegende Sicherheits- und Gesundheitsanforderungen

Die grundlegenden Sicherheits- und Gesundheitsanforderungen werden weiterhin erfüllt durch Übereinstimmung mit den in der EG-Baumusterprüfbescheinigung aufgeführten Normen.

Zertifizierungsstelle **ZELM Ex**

Braunschweig, 01.04.2004

Adolf Gruber

Zertifizierungsstelle Prüf- und ZELM Ex



EG-Baumusterprüfbescheinigungen ohne Unterschrift und ohne Stempel haben keine Gültigkeit.
Diese EG-Baumusterprüfbescheinigung darf nur unverändert weiterverbreitet werden.
Auszüge oder Änderungen bedürfen der Genehmigung der Prüf- und Zertifizierungsstelle ZELM Ex

Prüf- und Zertifizierungsstelle ZELM Ex • Siekgraben 56 • D-38124 Braunschweig

# Prüf- und Zertifizierungsstelle

# ZELM Ex

# 2. Ergänzung

(Ergänzung gemäß EG-Richtlinie 94/9 Anhang III Ziffer 6)

## zur EG-Baumusterprüfbescheinigung

## ZELM 03 ATEX 0128 X

Gerät: **Näherungssensoren Typen CB..., CC..., CJ..., NC..., NJ..., SC..., SJ...**

Hersteller: **Pepperl + Fuchs GmbH**

Anschrift: **D-68307 Mannheim**

Beschreibung der Ergänzung

Die induktiven und kapazitiven Sensoren der Typen CB..., CC..., CJ..., NC..., NJ..., SC..., SJ... werden um einige alternative Ausführungen ergänzt. Die Typenbezeichnungen dieser Ausführungen lauten:

NCN2-F56-N1...
NCB2-12GK...-N0...
NCN4-12GK...-N0...
NCB5-18GK...-N0...
NCN8-18GK...-N0...
NCB10-30GK...-N0...
NCN15-30GK...-N0...
NJ 1,5-F-N...
NJ 1,5-18GM-N-D...

Des weiteren wird die untere Grenze der Umgebungstemperatur bei folgenden Sensoren, die bereits in dieser EG-Baumusterprüfbescheinigung (einschl. der 1. Ergänzung) enthalten sind, herabgesetzt:

NJ 4-12GK-SN...
NJ 4-12GK-SN-Y...
NJ 10-30GK-SN...
SJ 3,5-SN...

Die Punkte in der Typenbezeichnung werden zur Unterscheidung nicht sicherheitsrelevanter Ausführungsunterschiede durch Ziffern und/oder Buchstaben ersetzt.

Elektrische Daten:

Der Zusammenhang zwischen dem Typ des angeschlossenen Stromkreises, der höchstzulässigen Umgebungstemperatur und der Oberflächentemperatur ist der folgenden Tabelle 1 zu entnehmen:

**Tabelle 1 (als Ergänzung zur Tabelle 1 der EG-Baumusterprüfbescheinigung ZELM 03 ATEX 0128 X sowie der 1. Ergänzung)**

| | Typ 1 | | | | | Typ 2 | | | | | Typ 3 | | | | |
|---|---|---|---|---|---|---|---|---|---|---|---|---|---|---|---|
| | Ui = 16 V | | | | | Ui = 16 V | | | | | Ui = 16 V | | | | |
| | Ii = 25 mA | | | | | Ii = 25 mA | | | | | Ii = 52 mA | | | | |
| | Pi = 34 mW | | | | | Pi = 64 mW | | | | | Pi = 169 mW | | | | |
| **Typ** | Tu= 40°C | Tu= 60°C | Tu= 70°C | Tu= 85°C | Tu= 100°C | Tu= 40°C | Tu= 60°C | Tu= 70°C | Tu= 85°C | Tu= 100°C | Tu= 40°C | Tu= 60°C | Tu= 70°C | Tu= 85°C | Tu= 100°C |
| | T | T | T | T | T | T | T | T | T | T | T | T | T | T | T |
| NCN2-F56-N1... | 44 | 64 | 73 | 88 | ------- | 48 | 67 | 76 | 90 | ------- | 60 | 77 | 85 | 97 | ------- |
| NC..., NJ..., SC..., SJ... | 44 | 64 | 73 | 88 | 102 | 48 | 67 | 76 | 90 | 103 | 60 | 77 | 85 | 97 | 108 |

Tu: obere Grenze der Umgebungstemperatur;

Die wirksamen inneren Kapazitäten und Induktivitäten für die einzelnen Sensortypen sind der folgenden Tabelle 2 zu entnehmen:



EG-Baumusterprüfbescheinigungen ohne Unterschrift und ohne Stempel haben keine Gültigkeit.
Diese EG-Baumusterprüfbescheinigung darf nur unverändert weiterverbreitet werden.
Auszüge oder Änderungen bedürfen der Genehmigung der Prüf- und Zertifizierungsstelle ZELM Ex

Prüf- und Zertifizierungsstelle ZELM Ex • Siekgraben 56 • D-38124 Braunschweig

# Prüf- und Zertifizierungsstelle

# ZELM Ex

## 2. Ergänzung zur EG-Baumusterprüfbescheinigung ZELM 03 ATEX 0128 X

**Tabelle 2 (als Ergänzung zur Tabelle 2 der EG-Baumusterprüfbescheinigung ZELM 03 ATEX 0128 X sowie der 1. Ergänzung)**

| Typ | Ci / nF | Li / µH | $T_{Umin}$ / °C | Typ | Ci / nF | Li / µH | $T_{Umin}$ / °C |
|---|---|---|---|---|---|---|---|
| NCN2-F56-N1... | 100 | 100 | -25 | NCB10-30GK...-N0... | 105 | 100 | -25 |
| NCB2-12GK...-N0... | 90 | 100 | -25 | NCN15-30GK...-N0... | 110 | 100 | -25 |
| NCN4-12GK...-N0... | 95 | 100 | -25 | NJ 1,5-F-N... | 30 | 50 | -25 |
| NCB5-18GK...-N0... | 95 | 100 | -25 | NJ 1,5-18GM-N-D | 50 | 60 | -25 |
| NCN8-18GK...-N0... | 95 | 100 | -25 | | | | |

Die angegebenen Werte für die inneren Kapazitäten und Induktivitäten berücksichtigen bereits ein Anschlusskabel von 10 m Länge.

Mit dieser 2. Ergänzung wird die untere Grenze der Umgebungstemperatur für einige bereits zertifizierte Sensortypen herabgesetzt. Die neuen unteren Grenzwerte sind der Tabelle 3 zu entnehmen:

**Tabelle 3 (Ersetzt die Angaben für diese Sensoren die entsprechenden Angaben in Tabelle 2 der EG-Baumusterprüfbescheinigung ZELM 03 ATEX 0128 X bzw. der 1. Ergänzung)**

| Typ | Ci / nF | Li / µH | $T_{Umin}$ / °C | Typ | Ci / nF | Li / µH | $T_{Umin}$ / °C |
|---|---|---|---|---|---|---|---|
| NJ 4-12GK-SN... | 70 | 150 | -50 | NJ 10-30GK-SN... | 120 | 150 | -50 |
| NJ 4-12GK-SN-Y... | 70 | 150 | -50 | SJ 3,5-SN... | 30 | 100 | -50 |

Die angegebenen Werte für die inneren Kapazitäten und Induktivitäten berücksichtigen bereits ein Anschlusskabel von 10 m Länge.

Prüfbericht Nr.

ZELM Ex 0210515369

Besondere Bedingungen

Die „Besonderen Bedingungen" gemäß EG-Baumusterprüfbescheinigung ZELM 03 ATEX 0128 X sowie der 1. Ergänzung bleiben von den Änderungen unberührt und weiterhin erhalten.

Grundlegende Sicherheits- und Gesundheitsanforderungen

Die grundlegenden Sicherheits- und Gesundheitsanforderungen werden weiterhin erfüllt durch Übereinstimmung mit den in der EG-Baumusterprüfbescheinigung aufgeführten Normen.

Zertifizierungsstelle **ZELM Ex**

Dipl.-Ing. Harald Zelm

Zertifizierungsstelle ZELM Ex

Braunschweig, 25.04.2005



EG-Baumusterprüfbescheinigungen ohne Unterschrift und ohne Stempel haben keine Gültigkeit.
Diese EG-Baumusterprüfbescheinigung darf nur unverändert weiterverbreitet werden.
Auszüge oder Änderungen bedürfen der Genehmigung der Prüf- und Zertifizierungsstelle ZELM Ex

Prüf- und Zertifizierungsstelle ZELM Ex • Siekgraben 56 • D-38124 Braunschweig

# Prüf- und Zertifizierungsstelle

# ZELM Ex

(1) # EC-TYPE-EXAMINATION CERTIFICATE

(2) Equipment and Protective Systems Intended for Use in Potentially Explosive Atmospheres - **Directive 94/9/EC**

(3) EC-TYPE-EXAMINATION CERTIFICATE Number:

## ZELM 03 ATEX 0128 X

(4) Equipment: Proximity sensors types CB..., CC..., CJ..., NC..., NJ..., SC..., SJ...

(5) Manufacturer: Pepperl + Fuchs GmbH

(6) Address: D-68307 Mannheim

(7) This equipment and any acceptable variation thereto are specified in the schedule to this certificate and the documents therein referred to.

(8) The Prüf- und Zertifizierungsstelle ZELM Ex, notified body No. 0820 in accordance with Article 9 of the Council Directive 94/9/EC of 23 March 1994, certifies that this equipment has been found to comply with the Essential Health and Safety Requirements relating to the design and construction of equipment and protective systems intended for use in potentially explosive atmospheres, given in Annex II to the Directive.

The examination and test results are recorded in the confidential report ZELM Ex 0840217167

(9) Compliance with the Essential Health and Safety Requirements has been assured by compliance with:

**prEN 61241-0: 2002** **31H/143/CD (IEC 61241-11): 2002**

(10) If the sign "X" is placed after the certificate number, it indicates that the equipment is subject to special conditions for safe use specified in the schedule to this certificate.

(11) This EC-type-examination Certificate relates only to the design, examination and tests of the specified equipment or protective system in accordance to the Directive 94/9/EC. Further requirements of the Directive apply to the manufacturing process and supply of this equipment or protective system. These are not covered by this Certificate.

(12) The marking of the equipment shall include the following:

**II 1 D Ex iaD 20 T... °C**

Zertifizierungsstelle **ZELM Ex**

Dipl.-Ing. Harald Zelm

Braunschweig, March 28, 2003



EC-type-examination Certificates without signature and stamp are not valid. The certificates may only be circulated without alteration. Extracts or alterations are subject to approval by the Prüf- und Zertifizierungsstelle ZELM Ex.
This English version is based on the German text. In the case of dispute, the German text shall prevail.

Prüf- und Zertifizierungsstelle ZELM Ex • Siekgraben 56 • D-38124 Braunschweig

(13) # SCHEDULE

(14) ## EC-TYPE-EXAMINATION CERTIFICATE ZELM 03 ATEX 0128 X

(15) Description of equipment

The types CB..., CC..., CJ..., NC..., NJ..., SC..., SJ... inductive and capacitive sensors are used for converting of position detection into electrical signals within the explosive atmosphere of category 1 D or 2 D or 3 D.

The inductive and capacitive sensors may be mounted across the boundary between zones 20 and 21 or 21 and 22 respectively.

They shall be used with intrinsically safe circuits. The sensors category depends on the connected intrinsically safe supply circuit.

The inductive and capacitive sensors consist of a resin-potted plastic or metallic housing. The supply connections are made by cable, litz wires, or by screw- or clamp-type terminals.

Instead of the points of the model code other letter- or numerial- combinations will be stated, which are describing several variations and versions of the equipment.

Electrical data

Supply and signal circuit

type of protection Intrinsic Safety Ex iaD or Ex ibD or EEx ia IIB or EEx ib IIB
for connection to certified intrinsically safe circuits only

maximum values:

| | type 1 | type 2 | type 3 |
|---|---|---|---|
| $U_i$ | 16 V | 16 V | 16 V |
| $I_i$ | 25 mA | 25 mA | 52 mA |
| $P_i$ | 34 mW | 64 mW | 169 mW |

lower limit of ambient temperature: acc. table 2

The correlations between type of connected circuit, maximum ambient temperature and surface temperature are shown in the following table 1:

**Table 1**

| | type 1 Ui = 16 V Ii = 25 mA Pi = 34 mW | | | type 2 Ui = 16 V Ii = 25 mA Pi = 64 mW | | | type 3 Ui = 16 V Ii = 52 mA Pi = 169 mW | | |
|---|---|---|---|---|---|---|---|---|---|
| **type** | Tu=40°C | Tu=70°C | Tu=100°C | Tu=40°C | Tu=70°C | Tu=100°C | Tu=40°C | Tu=70°C | Tu=100°C |
| | T | T | T | T | T | T | T | T | T |
| CB..., CC..., CJ... | 44 | 73 | --------- | 48 | 76 | --------- | 60 | 85 | --------- |
| NJ10-22-N-E93-Y106925 | 44 | 73 | --------- | 48 | 76 | --------- | 60 | 85 | --------- |
| NJ10-22-N-E93-Y30629 | 44 | 73 | --------- | 48 | 76 | --------- | 60 | 85 | --------- |
| NJ10-22-N-E93-Y52737 | 44 | 73 | --------- | 48 | 76 | --------- | 60 | 85 | --------- |
| NC..., NJ..., SC..., SJ... | 44 | 73 | 102 | 48 | 76 | 103 | 60 | 85 | 108 |

Tu: upper limit of ambient temperature



EC-type-examination Certificates without signature and stamp are not valid. The certificates may only be circulated without alteration. Extracts or alterations are subject to approval by the Prüf- und Zertifizierungsstelle ZELM Ex.
This English version is based on the German text. In the case of dispute, the German text shall prevail.

## Schedule to EC-TYPE-EXAMINATION CERTIFICATE ZELM 03 ATEX 0128 X

The maximum effective internal capacitances and inductances of the various sensor types are shown in the following table 2:

**Table 2**

| type | Ci/ nF | Li/ µH | $T_{Umin}$ / °C | type | Ci/ nF | Li/ µH | $T_{Umin}$ / °C |
|---|---|---|---|---|---|---|---|
| CBN2-F46-N... | 45 | 0 | - 25 | NJ 2-V3-N... | 40 | 50 | - 25 |
| CCN2-F46A-N... | 45 | 0 | - 25 | NJ 15+U.+N... | 140 | 130 | - 25 |
| CBN5-F46-N... | 45 | 0 | - 25 | NJ 20+U.+N... | 150 | 130 | - 25 |
| CCN5-F46A-N... | 45 | 0 | - 25 | NJ 30+U.+N... | 160 | 130 | - 25 |
| CBN10-F46-N... | 45 | 0 | - 25 | NJ 40+...+N... | 180 | 130 | - 25 |
| CCN10-F46A-N... | 45 | 0 | - 25 | NJ 50-FP-N... | 320 | 360 | - 25 |
| CCB10-30GM...-N... | 155 | 0 | - 25 | SC2-N0... | 150 | 150 | - 25 |
| CJ 1-12GK-N... | 60 | 0 | - 25 | SC3,5-N0-Y... | 150 | 150 | - 25 |
| CJ 2-18GK-N... | 60 | 0 | - 25 | SC3,5...-N0... | 150 | 150 | - 25 |
| CJ 4-12GK-N... | 60 | 0 | - 25 | SJ 1,8-N-Y... | 30 | 100 | - 25 |
| CJ 6-18GK-N... | 60 | 0 | - 25 | SJ 2,2-N... | 30 | 100 | - 25 |
| CJ 15-40-N... | 140 | 0 | - 25 | SJ 2-N... | 30 | 100 | - 25 |
| CJ 40-FP-N-... | 145 | 0 | - 25 | SJ 3,5-...-N... | 50 | 250 | - 25 |
| NCB1,5...M...N0... | 90 | 100 | - 25 | SJ 5-...-N... | 50 | 250 | - 25 |
| NCB2-12GM...-N0... | 90 | 100 | - 25 | SJ 5-K... | 50 | 550 | - 25 |
| NCN4-12GM...-N0... | 95 | 100 | - 25 | SJ 10-N... | 50 | 1000 | - 25 |
| NCB5-18GM...-N0... | 95 | 100 | - 25 | SJ 15-N... | 150 | 1200 | - 25 |
| NCN8-18GM...-N0... | 95 | 100 | - 25 | SJ 30-N... | 150 | 1250 | - 25 |
| NCB10-30GM..-N0... | 105 | 100 | - 25 | NJ 2-11-SN... | 50 | 150 | - 40 |
| NCN15-30GM...-N0... | 110 | 100 | - 25 | NJ 2-11-SN-G... | 50 | 150 | - 40 |
| NJ 1,5-6,5...-N | 30 | 50 | - 25 | NJ 2-12GK-SN... | 50 | 150 | - 40 |
| NJ 1,5-8-N... | 20 | 50 | - 25 | NJ 3-18GK-S1N... | 70 | 200 | - 25 |
| NJ 2-11-N... | 45 | 50 | - 25 | NJ 4-12GK-SN... | 70 | 150 | - 40 |
| NJ 2-11-N-G... | 30 | 50 | - 25 | NJ 5-18GK-SN... | 120 | 200 | - 40 |
| NJ 5-11-N... | 45 | 50 | - 25 | NJ 5-30GK-S1N... | 100 | 200 | - 25 |
| NJ10-22-N... | 130 | 100 | - 25 | NJ 6-22-SN... | 110 | 150 | - 40 |
| NJ10-22-N-E93-Y106925 | 130 | 100 | - 40 | NJ 6-22-SN-G... | 110 | 150 | - 40 |
| NJ10-22-N-E93-Y30629 | 130 | 100 | - 25 | NJ 6S1+U.+N... | 180 | 150 | - 40 |
| NJ10-22-N-E93-Y52737 | 130 | 100 | - 25 | NJ 8-18GK-SN... | 120 | 200 | - 40 |
| NCB2-F1-N0... | 90 | 100 | - 25 | NJ 10-30GK-SN... | 120 | 150 | - 40 |
| NCB2-V3-N0... | 100 | 100 | - 25 | NJ 15-30GK-SN... | 120 | 180 | - 40 |
| NCN4-V3-N0... | 100 | 100 | - 25 | NJ 15S+U.+N... | 180 | 150 | - 40 |
| NCB15+U...+N0... | 110 | 160 | - 25 | NJ 20S+U.+N... | 200 | 150 | - 40 |
| NCB40-FP-N0.. | 220 | 360 | - 25 | NJ 40-FP-SN... | 370 | 300 | - 40 |
| NCN15-M...-N0.. | 100 | 100 | - 25 | SJ 2-SN... | 30 | 100 | - 40 |
| NCN20+U...+N0... | 110 | 160 | - 25 | SJ 2-S1N... | 30 | 100 | - 25 |
| NCN30+U...+N0... | 110 | 160 | - 25 | SJ 3,5-S1N... | 30 | 100 | - 25 |
| NCN40+U...+N0... | 120 | 130 | - 25 | SJ 3,5-SN... | 30 | 100 | - 40 |
| NCN50-FP-N0... | 220 | 360 | - 25 | | | | |

The indicated values of internal capacitances and inductances do consider a supply cord of 10 m length.



EC-type-examination Certificates without signature and stamp are not valid. The certificates may only be circulated without alteration. Extracts or alterations are subject to approval by the Prüf- und Zertifizierungsstelle ZELM Ex.
This English version is based on the German text. In the case of dispute, the German text shall prevail.

## Schedule to EC-TYPE-EXAMINATION CERTIFICATE ZELM 03 ATEX 0128 X

References:

The instruction manual has to be considered, in particular for the mounting conditions, supply circuit and operating temperatures.

(16) Report No.

ZELM Ex 0840217167

(17) Special conditions for safe use

1. The correlations between type of connected circuit, maximum ambient temperature and surface temperature and the effective internal capacitances and inductances of the various sensor types are shown in the tables of clause (15).
2. The sensor supply must be made by separately certified intrinsically safe circuits. Because of possible ignition hazards, which can arise from faults and/or transient circulating currents in the potential equalization system, galvanic isolation in the supply and signal circuits is preferred. Associated apparatus without galvanic isolation may only be used whether the appropriate requirements according to IEC 60079-14 are met.
3. Operational electrostatic charges due to medium flow or mechanical rubbing must be excluded, if the charge-exposed plastic surface area is greater than approx. 100 cm² to avoid brush discharges.
4. For sensor types

| | | | |
|---|---|---|---|
| CJ 40-FP-N-... | NCN40+U...+N0... | NJ 40+U+...+N... | SJ 30-N... |
| NCB40-FP-N0... | NCN50-FP-N0... | NJ 50-FP-N... | NJ 40-FP-SN... |

and applications with high charges to be expected (e.g. spray gun for paints, film material production, dust conveyors, machine frictional processes) the charge-exposed plastic surface area must be reduced to approx. 15 cm² by installation measures to avoid propagating brush discharges.

5. Hazardous electrostatic charges of metallic parts must be prevented. This can be made by connection to the local equipotential bonding, but very small metallic parts (e.g. screws) must not be earthed.
6. The tightness for the purposes of zone seal measures for the mounting across the boundary between different zones is not covered by this Certificate and must be ensured by appropriate measures of installation.



EC-type-examination Certificates without signature and stamp are not valid. The certificates may only be circulated without alteration. Extracts or alterations are subject to approval by the Prüf- und Zertifizierungsstelle ZELM Ex.
This English version is based on the German text. In the case of dispute, the German text shall prevail.

Prüf- und Zertifizierungsstelle ZELM Ex • Siekgraben 56 • D-38124 Braunschweig

## Schedule to EC-TYPE-EXAMINATION CERTIFICATE ZELM 03 ATEX 0128 X

(18) Essential Health and Safety Requirements

Met by above mentioned draft standards in accordance with Directive 94/9/EC. The sensors adhere to the standards EN 50014 and EN 50020. For dust atmospheres no harmonised european standards are avaivable at the moment.

Zertifizierungsstelle **ZELM Ex**

Braunschweig, March 28, 2003

Dipl.-Ing. Harald Zelm



EC-type-examination Certificates without signature and stamp are not valid. The certificates may only be circulated without alteration. Extracts or alterations are subject to approval by the Prüf- und Zertifizierungsstelle ZELM Ex.
This English version is based on the German text. In the case of dispute, the German text shall prevail.

# Prüf- und Zertifizierungsstelle

# ZELM Ex

# 1. Supplement

(Supplement according to EC-Directive 94/9 Annex III letter 6)

## to EC-type-examination Certificate

## ZELM 03 ATEX 0128 X

Equipment: **Proximity sensors types CB..., CC..., CJ..., NC..., NJ..., SC..., SJ...**

Manufacturer: **Pepperl + Fuchs GmbH**
Address: **D-68307 Mannheim**

Description of supplement

The types CB..., CC..., CJ..., NC..., NJ..., SC..., SJ... inductive and capacitive sensors are supplemented with some further versions. The types of these versions are named as follows:

NJ 0,8-5GM-N...
NJ 2-12GK-N...
NJ 2-12GM-N...
NJ 4-12GK-N...
NJ 4-12GM-N...
NJ 5-18GK-N...
NJ 5-18GM-N...
NJ 8-18GK-N...
NJ 8-18GM-N...
NJ 10-30GK-N...
NJ 10-30GM-N...
NJ 15-30GK-N...
NJ 15-30GM-N...
NJ 4-12GK-SN-Y...

Marking **II 1 D Ex iaD 20 T... °C**

The maximum surface temperature „..." is shown in table 1

The lower limit of ambient temperature: acc. table 2

Electrical data

The correlations between type of connected circuit, maximum ambient temperature and surface temperature are shown in the following table 1:

**Table 1 (as supplement to table1 of the EC-type examination certificate ZELM 03 ATEX 0128 X)**

| | Typ 1 | | | | Typ 2 | | | | Typ 3 | | | |
|---|---|---|---|---|---|---|---|---|---|---|---|---|
| | Ui = 16 V | | | | Ui = 16 V | | | | Ui = 16 V | | | |
| | Ii = 25 mA | | | | Ii = 25 mA | | | | Ii = 52 mA | | | |
| | Pi = 34 mW | | | | Pi = 64 mW | | | | Pi = 169 mW | | | |
| **Typ** | $T_u$= 40°C | $T_u$= 60°C | $T_u$= 70°C | $T_u$= 100°C | $T_u$= 40°C | $T_u$= 60°C | $T_u$= 70°C | $T_u$= 100°C | $T_u$= 40°C | $T_u$= 60°C | $T_u$= 70°C | $T_u$= 100°C |
| | T | T | T | T | T | T | T | T | T | T | T | T |
| NJ 4-12GK-SN-Y... | 44 | 64 | 73 | --- | 48 | 67 | 76 | --- | 60 | 77 | 85 | --- |
| NC..., NJ..., SC..., SJ... | 44 | 64 | 73 | 102 | 48 | 67 | 76 | 103 | 60 | 77 | 85 | 108 |

$T_u$: upper limit of ambient temperature



EC-type-examination Certificates without signature and stamp are not valid. The certificates may only be circulated without alteration. Extracts or alterations are subject to approval by the Prüf- und Zertifizierungsstelle ZELM Ex.
This English version is based on the German text. In the case of dispute, the German text shall prevail.

The maximum effective internal capacitances and inductances of the various sensor types are shown in the following table 2:

**Table 2 (as supplement to table 2 of the EC-type examination certificate ZELM 03 ATEX 0128 X)**

| Typ | Ci / nF | Li / µH | $T_{Umin}$ / °C | Typ | Ci / nF | Li / µH | $T_{Umin}$ / °C |
|---|---|---|---|---|---|---|---|
| NJ 0,8-5GM-N... | 30 | 50 | - 25 | NJ 8-18GK-N... | 70 | 50 | - 25 |
| NJ 2-12GK-N... | 45 | 50 | - 25 | NJ 8-18GM-N... | 70 | 50 | - 25 |
| NJ 2-12GM-N... | 30 | 50 | - 25 | NJ 10-30GK-N... | 140 | 100 | - 25 |
| NJ 4-12GK-N... | 45 | 50 | - 25 | NJ 10-30GM-N... | 140 | 100 | - 25 |
| NJ 4-12GM-N... | 45 | 50 | - 25 | NJ 15-30GK-N... | 140 | 100 | - 25 |
| NJ 5-18GK-N... | 70 | 50 | - 25 | NJ 15-30GM-N... | 140 | 100 | - 25 |
| NJ 5-18GM-N... | 70 | 50 | - 25 | NJ 4-12GK-SN-Y... | 70 | 150 | - 45 |

The indicated values of internal capacitances and inductances do consider a supply cord of 10 m length.

Report No.

ZELM Ex 0110419268

Special conditions for safe use

The special conditions of the EC-type-examination Certificate ZELM 03 ATEX 0128 X are valid further on. The following is additionally applied:

1. For the operation in current circuits which reach the level of protection ib IIB resp. ibD, the use in areas resp. between areas which require category 1 is not permitted.

Essential Health and Safety Requirements

met by adherence to the standards which are given in the EC-type-examination Certificate.

Zertifizierungsstelle **ZELM Ex**

Adolf Gruber

Zertifizierungs- und Prüf- stelle ZELM Ex

Braunschweig, April 1st, 2004



EC-type-examination Certificates without signature and stamp are not valid. The certificates may only be circulated without alteration. Extracts or alterations are subject to approval by the Prüf- und Zertifizierungsstelle ZELM Ex.
This English version is based on the German text. In the case of dispute, the German text shall prevail.

# 2. Supplement

(Supplement according to EC-Directive 94/9 Annex III letter 6)

## to EC-type-examination Certificate

## ZELM 03 ATEX 0128 X

Equipment: **Proximity sensors types CB..., CC..., CJ..., NC..., NJ..., SC..., SJ...**

Manufacturer: **Pepperl + Fuchs GmbH**

Address: **D-68307 Mannheim**

Description of supplement

The types CB..., CC..., CJ..., NC..., NJ..., SC..., SJ... inductive and capacitive sensors are supplemented with some further versions. The types of these versions are named as follows:

NCN2-F56-N1...
NCB2-12GK...-N0...
NCN4-12GK...-N0...
NCB5-18GK...-N0...
NCN8-18GK...-N0...
NCB10-30GK...-N0...
NCN15-30GK...-N0...
NJ 1,5-F-N...
NJ 1,5-18GM-N-D...

In future the lower limit of ambient temperature will be reduced for the following sensor types, which are already covered by the EC-type-examination Certificate ZELM 03 ATEX 0128 X respective by the 1. Supplement.

NJ 4-12GK-SN...
NJ 4-12GK-SN-Y...
NJ 10-30GK-SN...
SJ 3,5-SN...

Instead of the points of the model code other letter- or numerical- combinations will be stated, which are describing not safety relevant variations of the equipment.

Electrical data:

The correlations between type of connected circuit, maximum ambient temperature and surface temperature are shown in the following table 1:

**table 1 (as supplement to table 1 of the EC-type-examination Certificate ZELM 03 ATEX 0128 X and the 1. Supplement)**

| | type 1 | | | | | type 2 | | | | | type 3 | | | | |
|---|---|---|---|---|---|---|---|---|---|---|---|---|---|---|---|
| | Ui = 16 V | | | | | Ui = 16 V | | | | | Ui = 16 V | | | | |
| | Ii = 25 mA | | | | | Ii = 25 mA | | | | | Ii = 52 mA | | | | |
| | Pi = 34 mW | | | | | Pi = 64 mW | | | | | Pi = 169 mW | | | | |
| **type** | Tu= 40°C | Tu= 60°C | Tu= 70°C | Tu= 85°C | Tu= 100°C | Tu= 40°C | Tu= 60°C | Tu= 70°C | Tu= 85°C | Tu= 100°C | Tu= 40°C | Tu= 60°C | Tu= 70°C | Tu= 85°C | Tu= 100°C |
| | T | T | T | T | T | T | T | T | T | T | T | T | T | T | T |
| NCN2-F56-N1... | 44 | 64 | 73 | 88 | ------- | 48 | 67 | 76 | 90 | ------- | 60 | 77 | 85 | 97 | ------- |
| NC..., NJ..., SC..., SJ... | 44 | 64 | 73 | 88 | 102 | 48 | 67 | 76 | 90 | 103 | 60 | 77 | 85 | 97 | 108 |

Tu: upper limit of ambient temperature

The maximum effective internal capacitances and inductances of the various sensor types are shown in the following table 2:



EC-type-examination Certificates without signature and stamp are not valid. The certificates may only be circulated without alteration. Extracts or alterations are subject to approval by the Prüf- und Zertifizierungsstelle ZELM Ex.
This English version is based on the German text. In the case of dispute, the German text shall prevail.

Doc No: 16317-2

# Prüf- und Zertifizierungsstelle ZELM Ex

## 2. SUPPLEMENT OF THE EC-TYPE-EXAMINATION CERTIFICATE ZELM 03 ATEX 0128

**table 2 (as supplement to table 2 of the EC-type-examination Certificate ZELM 03 ATEX 0128 X and the 1. Supplement)**

| type | Ci / nF | Li / µH | $T_{Umin}$ / °C | type | Ci / nF | Li / µH | $T_{Umin}$ / °C |
|---|---|---|---|---|---|---|---|
| NCN2-F56-N1... | 100 | 100 | -25 | NCB10-30GK...-N0... | 105 | 100 | -25 |
| NCB2-12GK...-N0... | 90 | 100 | -25 | NCN15-30GK...-N0... | 110 | 100 | -25 |
| NCN4-12GK...-N0... | 95 | 100 | -25 | NJ 1,5-F-N... | 30 | 50 | -25 |
| NCB5-18GK...-N0... | 95 | 100 | -25 | NJ 1,5-18GM-N-D | 50 | 60 | -25 |
| NCN8-18GK...-N0... | 95 | 100 | -25 | | | | |

The indicated values of internal capacitances and inductances consider a supply cord of 10 m length.

With this 2. Supplement the lower limit of ambient temperature for some certificated sensors will be reduced. The new lower limit of ambient temperature for this sensor types are shown in the following table 3:

**table 3 (replace the relevant giving of the sensors into the table 2 of the EC-type-examination Certificate ZELM 03 ATEX 0128 X and the 1. Supplement)**

| type | Ci / nF | Li / µH | $T_{Umin}$ / °C | type | Ci / nF | Li / µH | $T_{Umin}$ / °C |
|---|---|---|---|---|---|---|---|
| NJ 4-12GK-SN... | 70 | 150 | -50 | NJ 10-30GK-SN... | 120 | 150 | -50 |
| NJ 4-12GK-SN-Y... | 70 | 150 | -50 | SJ 3,5-SN... | 30 | 100 | -50 |

The indicated values of internal capacitances and inductances consider a supply cord of 10 m length.

Report No.

ZELM Ex 0210515369

Special conditions for safe use

The special conditions of the EC-type-examination Certificate ZELM 03 ATEX 0128 X and of the 1. Supplement are valid further on.

Essential Health and Safety Requirements

The essential Health and Safety Requirements are further met by concordance with the standards scheduled in the EC-Type-examination Certificate.

Zertifizierungsstelle **ZELM Ex**

Dipl.-Ing. Harald Zelm

Zertifizierungs- und Prüf- stelle ZELM Ex

Braunschweig, April 25, 2005



EC-type-examination Certificates without signature and stamp are not valid. The certificates may only be circulated without alteration. Extracts or alterations are subject to approval by the Prüf- und Zertifizierungsstelle ZELM Ex.
This English version is based on the German text. In the case of dispute, the German text shall prevail.

Prüf- und Zertifizierungsstelle ZELM Ex • Siekgraben 56 • D-38124 Braunschweig

# Physikalisch-Technische Bundesanstalt

**Braunschweig und Berlin**

**Doc No: 16319-0**

Item No.: 411946

Order No.: 73762

(1) # EG-Baumusterprüfbescheinigung

(2) Geräte und Schutzsysteme zur bestimmungsgemäßen Verwendung in explosionsgefährdeten Bereichen - **Richtlinie 94/9/EG**

(3) EG-Baumusterprüfbescheinigungsnummer

**PTB 00 ATEX 2080**

(4) Gerät: Trennschaltverstärker Typ K*D*-SR*-Ex*.W.*

(5) Hersteller: Pepperl + Fuchs GmbH

(6) Anschrift: Königsberger Allee 87, D-68307 Mannheim

(7) Die Bauart dieses Gerätes sowie die verschiedenen zulässigen Ausführungen sind in der Anlage zu dieser Baumusterprüfbescheinigung festgelegt.

(8) Die Physikalisch-Technische Bundesanstalt bescheinigt als benannte Stelle Nr. 0102 nach Artikel 9 der Richtlinie des Rates der Europäischen Gemeinschaften vom 23. März 1994 (94/9/EG) die Erfüllung der grundlegenden Sicherheits- und Gesundheitsanforderungen für die Konzeption und den Bau von Geräten und Schutzsystemen zur bestimmungsgemäßen Verwendung in explosionsgefährdeten Bereichen gemäß Anhang II der Richtlinie.

Die Ergebnisse der Prüfung sind in dem vertraulichen Prüfbericht PTB Ex 00-20205 festgelegt.

(9) Die grundlegenden Sicherheits- und Gesundheitsanforderungen werden erfüllt durch Übereinstimmung mit

**EN 50014:1997** **EN 50020:1994**

(10) Falls das Zeichen „X" hinter der Bescheinigungsnummer steht, wird auf besondere Bedingungen für die sichere Anwendung des Gerätes in der Anlage zu dieser Bescheinigung hingewiesen.

(11) Diese EG-Baumusterprüfbescheinigung bezieht sich nur auf Konzeption und Bau des festgelegten Gerätes gemäß Richtlinie 94/9/EG. Weitere Anforderungen dieser Richtlinie gelten für die Herstellung und das Inverkehrbringen dieses Gerätes.

(12) Die Kennzeichnung des Gerätes muß die folgenden Angaben enthalten:

**Ex II (1) G D [EEx ia] IIC**

Zertifizierungsstelle Explosionsschutz
Im Auftrag

Braunschweig, 20. Juli 2000

Dr.-Ing. U. Johannsmeyer, z.Z. abgeordnet
Regierungsdirektor

PHYSIKALISCH-TECHNISCHE BUNDESANSTALT 24



EG-Baumusterprüfbescheinigungen ohne Unterschrift und ohne Siegel haben keine Gültigkeit.
Diese EG-Baumusterprüfbescheinigung darf nur unverändert weiterverbreitet werden.
Auszüge oder Änderungen bedürfen der Genehmigung der Physikalisch-Technischen Bundesanstalt.

Physikalisch-Technische Bundesanstalt • Bundesallee 100 • D-38116 Braunschweig

(13) # Anlage

(14) ## EG-Baumusterprüfbescheinigung PTB 00 ATEX 2080

(15) Beschreibung des Gerätes

Der Trennschaltverstärker Typ K*D*-SR*-Ex*.W.*dient zur Übertragung von Steuerbefehlen aus dem explosionsgefährdeten Bereich in den nichtexplosionsgefährdeten Bereich sowie zur sicheren galvanischen Trennung von eigensicheren und nichteigensicheren Stromkreisen.

Die höchstzulässige Umgebungstemperatur beträgt 60 °C.

Elektrische Daten

Versorgungsstromkreis ..... Gleichspannung 20 ...30 V DC
(Klemmen 14 und 15 bzw. Powerrailkontakte) Sicherheitstechnische Maximalspannung: $U_m$ = 253 V AC
$U_m$ = 125 V DC

Ausgangsstromkreise ..... Wechselstrom Gleichstrom
(Klemmen 7, 8, 9 bzw. 10, 11, 12)

| Wechselstrom | Gleichstrom | |
|---|---|---|
| U ≤ 253 V | U ≤ 40 V | U ≤ 130 V |
| I ≤ 2 A | I ≤ 2 A | I ≤ 20 mA |
| S ≤ 500 VA | P ≤ 80 W | |
| cosφ ≥ 0,7 | | |

Sicherheitst. Maximalspannung: $U_m$ = 253 V AC

Eingangsstromkreise ..... in Zündschutzart Eigensicherheit EEx ia IIA/IIB/IIC
(Klemmen 1, 2, 3 bzw. 4, 5, 6)..... bzw. EEx ib IIA/IIB/IIC

Höchstwerte je Stromkreis:
$U_o$ = 10,5 V
$I_o$ = 13 mA
$P_o$ = 34 mW
$R_i$ = 807,7 Ω
Kennlinie linear
$C_i \approx 0$
$L_i \approx 0$

| Zündschutzart | EEx ia bzw. ib | | |
|---|---|---|---|
| | IIA | IIB | IIC |
| höchstzulässige äuß. Induktivit $L_o$ | 1 H | 840 mH | 210 mH |
| höchstzulässige äuß. Kapazität $C_o$ | 75 µF | 16,8 µF | 2,41 µF |



EG-Baumusterprüfbescheinigungen ohne Unterschrift und ohne Siegel haben keine Gültigkeit.
Diese EG-Baumusterprüfbescheinigung darf nur unverändert weiterverbreitet werden.
Auszüge oder Änderungen bedürfen der Genehmigung der Physikalisch-Technischen Bundesanstalt.

Physikalisch-Technische Bundesanstalt • Bundesallee 100 • D-38116 Braunschweig

Bei Vorhandensein konzentrierter Kapazitäten und/oder Induktivitäten im eigensicheren Eingangsstromkreis sind die höchstzulässigen äußeren Kapazitäten und Induktivitäten für Stromkreise der Kategorie „ia" der nachfolgenden Tabelle zu entnehmen.

| Zündschutzart | EEx ia | |
|---|---|---|
| | IIB | IIC |
| höchstzulässige äußere Induktivit $L_o$ | 7 mH | 3 mH |
| höchstzulässige äußere Kapazität $C_o$ | 2,1 µF | 620 nF |

Bei der Zusammenschaltung beider eigensicherer Eingangsstromkreise ergeben sich folgende Höchstwerte:
$U_o$ = 10,5 V
$I_o$ = 26 mA
$P_o$ = 68 mW
$R_i$ = 403,9 Ω
Kennlinie linear
$C_i \approx 0$
$L_i \approx 0$

| Zündschutzart | EEx ia bzw. ib | | |
|---|---|---|---|
| | IIA | IIB | IIC |
| höchstzulässige äuß. Induktivit $L_o$ | 420 mH | 210 mH | 52 mH |
| höchstzulässige äuß. Kapazität $C_o$ | 75 µF | 16,8 µF | 2,41 µF |

Bei Vorhandensein konzentrierter Kapazitäten und/oder Induktivitäten in den zusammengeschaltenen eigensicheren Eingangsstromkreisen sind die höchstzulässigen äußeren Kapazitäten und Induktivitäten für Stromkreise der Kategorie „ia" der nachfolgenden Tabelle zu entnehmen.

| Zündschutzart | EEx ia | |
|---|---|---|
| | IIB | IIC |
| höchstzulässige äußere Induktivit $L_o$ | 7 mH | 3 mH |
| höchstzulässige äußere Kapazität $C_o$ | 2,1 µF | 590 nF |

Die eigensicheren Eingangsstromkreise sind von allen weiteren Stromkreisen bis zu einem Scheitelwert der Nennspannung von 375 V sicher galvanisch getrennt.

(16) Prüfbericht PTB Ex 00-20205

(17) Besondere Bedingungen

keine



EG-Baumusterprüfbescheinigungen ohne Unterschrift und ohne Siegel haben keine Gültigkeit.
Diese EG-Baumusterprüfbescheinigung darf nur unverändert weiterverbreitet werden.
Auszüge oder Änderungen bedürfen der Genehmigung der Physikalisch-Technischen Bundesanstalt.

Physikalisch-Technische Bundesanstalt • Bundesallee 100 • D-38116 Braunschweig

# Physikalisch-Technische Bundesanstalt

**Braunschweig und Berlin**

**Anlage zur EG-Baumusterprüfbescheinigung PTB 00 ATEX 2080**

(18) Grundlegende Sicherheits- und Gesundheitsanforderungen

durch Normen abgedeckt

Zertifizierungsstelle Explosionsschutz
Im Auftrag

Braunschweig, 20. Juli 2000

Dr.-Ing. U. Johannsmeyer, z.Z. abwesend
Regierungsdirektor



EG-Baumusterprüfbescheinigungen ohne Unterschrift und ohne Siegel haben keine Gültigkeit.
Diese EG-Baumusterprüfbescheinigung darf nur unverändert weiterverbreitet werden.
Auszüge oder Änderungen bedürfen der Genehmigung der Physikalisch-Technischen Bundesanstalt.

Physikalisch-Technische Bundesanstalt • Bundesallee 100 • D-38116 Braunschweig

# Physikalisch-Technische Bundesanstalt

**Braunschweig und Berlin**

## 1. E R G Ä N Z U N G

**gemäß Richtlinie 94/9/EG Anhang III Ziffer 6**

## zur EG-Baumusterprüfbescheinigung PTB 00 ATEX 2080

Gerät: Trennschaltverstärker Typ K*D*-SR*-Ex*.W.*

Kennzeichnung: Ⓔx **II (1) G D [EEx ia] IIC**

Hersteller: Pepperl + Fuchs GmbH

Anschrift: Königsberger Allee 87
68307 Mannheim, Deutschland

Beschreibung der Ergänzungen und Änderungen

Der Trennschaltverstärker Typ K*D*-SR*-Ex*.W.* wurde technisch überarbeitet und darf zukünftig auch entsprechend den Prüfungsunterlagen des Prüfberichtes PTB Ex 01-21062 gefertigt und betrieben werden. Die Änderungen betreffen den inneren Aufbau, das Gehäuse sowie die „Elektrischen Daten".

Die „Elektrischen Daten" werden um einen Fehlermeldeausgang sowie um ein zusätzliches Wertepaar für die Ausgangsstromkreise bei Wechselstrombetrieb erweitert.

Die EG-Baumusterprüfbescheinigung wird um den Trennschaltverstärker Typ **K*D*-SR*-Ex2.W.IR** erweitert. Diese Typenvariante unterscheidet sich nur durch die Firmware von den bereits bescheinigten Varianten.

Alle anderen Angaben gelten unverändert auch für diese erste Ergänzung.

Elektrische Daten

| | | | | | | | |
|---|---|---|---|---|---|---|---|
| Fehlermeldeausgang (Powerrailkontakt PR4) | Sicherheitst. Maximalspannung: | | | $U_m$= 40 V DC | | | |
| Ausgangsstromkreise (Klemmen 7, 8, 9 bzw. 10, 11, 12) | Wechselstrom | | | Gleichstrom | | | |
| | U ≤ 253 V | U ≤ 126,5 V | | U ≤ 40 V | U ≤ 130 V | | |
| | I ≤ 2 A | I ≤ 4 A | | I ≤ 2 A | I ≤ 20 mA | | |
| | S ≤ 500 VA | | | P ≤ 80 W | | | |
| | cosφ ≥ 0,7 | | | | | | |
| | Sicherheitst. Maximalspannung: | | | $U_m$= 253 V AC | | | |



EG-Baumusterprüfbescheinigungen ohne Unterschrift und ohne Siegel haben keine Gültigkeit.
Diese EG-Baumusterprüfbescheinigung darf nur unverändert weiterverbreitet werden.
Auszüge oder Änderungen bedürfen der Genehmigung der Physikalisch-Technischen Bundesanstalt.

Physikalisch-Technische Bundesanstalt • Bundesallee 100 • D-38116 Braunschweig

# Physikalisch-Technische Bundesanstalt

**Braunschweig und Berlin**

**1. Ergänzung zur EG-Baumusterprüfbescheinigung PTB 00 ATEX 2080**

Prüfbericht: PTB Ex 01-21062

Zertifizierungsstelle Explosionsschutz
Im Auftrag

Braunschweig, 13. September 2001

Dr.-Ing. U. Johannsmeyer
Regierungsdirektor



EG-Baumusterprüfbescheinigungen ohne Unterschrift und ohne Siegel haben keine Gültigkeit.
Diese EG-Baumusterprüfbescheinigung darf nur unverändert weiterverbreitet werden.
Auszüge oder Änderungen bedürfen der Genehmigung der Physikalisch-Technischen Bundesanstalt.

Physikalisch-Technische Bundesanstalt • Bundesallee 100 • D-38116 Braunschweig

# Physikalisch-Technische Bundesanstalt

**Braunschweig und Berlin**

PTB

**Doc No: 16319-0**

(1) # EC-TYPE-EXAMINATION CERTIFICATE

**(Translation)**

(2) Equipment and Protective Systems Intended for Use in Potentially Explosive Atmospheres - **Directive 94/9/EC**

(3) EC-type-examination Certificate Number:

**PTB 00 ATEX 2080**

(4) Equipment: Isolation Switching Amplifier type K*D*-SR*-Ex*.W.*

(5) Manufacturer: Pepperl + Fuchs GmbH

(6) Address: Königsberger Allee 87, D-68307 Mannheim

(7) This equipment and any acceptable variation thereto are specified in the schedule to this certificate and the documents therein referred to.

(8) The Physikalisch-Technische Bundesanstalt, notified body No. 0102 in accordance with Article 9 of the Council Directive 94/9/EC of 23 March 1994, certifies that this equipment has been found to comply with the Essential Health and Safety Requirements relating to the design and construction of equipment and protective systems intended for use in potentially explosive atmospheres, given in Annex II to the Directive.

The examination and test results are recorded in the confidential report PTB Ex 00-20205.

(9) Compliance with the Essential Health and Safety Requirements has been assured by compliance with:

**EN 50014:1997** **EN 50020:1994**

(10) If the sign "X" is placed after the certificate number, it indicates that the equipment is subject to special conditions for safe use specified in the schedule to this certificate.

(11) This EC-type-examination Certificate relates only to the design and construction of the specified equipment in accordance with Directive 94/9/EC. Further requirements of this Directive apply to the manufacture and supply of this equipment.

(12) The marking of the equipment shall include the following:

**II (1) G D [EEx ia] IIC**

Zertifizierungsstelle Explosionsschutz
By order:

Braunschweig, July 20, 2000

In the absence of Dr.-Ing. U. Johannsmeyer
Regierungsdirektor

PHYSIKALISCH-TECHNISCHE BUNDESANSTALT 24



EC-type-examination Certificates without signature and official stamp shall not be valid. The certificates may be circulated only without alteration. Extracts or alterations are subject to approval by the Physikalisch-Technische Bundesanstalt.
In case of dispute, the German text shall prevail.

Physikalisch-Technische Bundesanstalt • Bundesallee 100 • D-38116 Braunschweig

(13) # SCHEDULE

(14) ## EC-TYPE-EXAMINATION CERTIFICATE PTB 00 ATEX 2080

(15) Description of equipment

The isolation switching amplifier type K*D*-SR*-Ex*.W.* is used for the transmission of control commands from the hazardous area into the non-hazardous area as well as for the safe electrical isolation of intrinsically safe and nonintrinsically safe circuits.

The maximum permissible ambient temperature is 60°C.

Electrical data

Supply circuit (terminals 14 and 15 resp. powerrail contacts): direct voltage 20...30 V DC
maximum voltage: $U_m$ = 253 V AC
$U_m$ = 125 V DC

Output circuits (terminals 7, 8, 9 resp. 10, 11, 12): alternating current
$U \leq 253$ V
$I \leq 2$ A
$S \leq 500$ VA
$\cos\varphi \geq 0.7$

direct current
$U \leq 40$ V
$I \leq 2$ A
$P \leq 80$ W

$U \leq 130$ V
$I \leq 20$ mA

maximum voltage: $U_m$ = 253 V AC

Input circuits (terminals 1, 2, 3 resp. 4, 5, 6): type of protection Intrinsic Safety EEx ia IIA/IIB/IIC resp. EEx ib IIA/IIB/IIC
maximum values per circuit:
$U_o$ = 10.5 V
$I_o$ = 13 mA
$P_o$ = 34 mW
$R_i$ = 807.7 Ω
linear characteristic
$C_i \approx 0$
$L_i \approx 0$

| type of protection | EEx ia resp. ib | | |
|---|---|---|---|
| | IIA | IIB | IIC |
| maximum permissible external inductance $L_O$ | 1 H | 840 mH | 210 mH |
| maximum permissible external capacitance $C_O$ | 75 µF | 16.8 µF | 2.41 µF |



EC-type-examination Certificates without signature and official stamp shall not be valid. The certificates may be circulated only without alteration. Extracts or alterations are subject to approval by the Physikalisch-Technische Bundesanstalt.
In case of dispute, the German text shall prevail.

Physikalisch-Technische Bundesanstalt • Bundesallee 100 • D-38116 Braunschweig

In the presence of concentrated capacitances and/or inductances in the intrinsically safe input circuit, the maximum permissible external capacitances and inductances for circuits of category „ia" are to be taken from the following table.

| type of protection | EEx ia | |
|---|---|---|
| | IIB | IIC |
| maximum permissible external inductance $L_O$ | 7 mH | 3 mH |
| maximum permissible external capacitance $C_O$ | 2.1 µF | 620 nF |

When both intrinsically safe input circuits are interconnected, the following maximum values result:
$U_o$ = 10.5 V
$I_o$ = 26 mA
$P_o$ = 68 mW
$R_i$ = 403.9 Ω
linear characteristic
$C_i \approx$ 0
$L_i \approx$ 0

| type of protection | EEx ia resp. ib | | |
|---|---|---|---|
| | IIA | IIB | IIC |
| maximum permissible external inductance $L_O$ | 420 mH | 210 mH | 52 mH |
| maximum permissible external capacitance $C_O$ | 75 µF | 16.8 µF | 2.41 µF |

In the presence of concentrated capacitances and/or inductances in the interconnnected intrinsically safe input circuits, the maximum permissible external capacitances and inductances for circuits of category „ia" are to be taken from the following table.

| type of protection | EEx ia | |
|---|---|---|
| | IIB | IIC |
| maximum permissible external inductance $L_O$ | 7 mH | 3 mH |
| maximum permissible external capacitance $C_O$ | 2.1 µF | 590 nF |

The intrinsically safe input circuits are safely electrically isolated from all other circuits up to a peak value of the nominal voltage of 375 V.

(16) Test report PTB Ex 00-20205

(17) Special conditions for safe use

None



EC-type-examination Certificates without signature and official stamp shall not be valid. The certificates may be circulated only without alteration. Extracts or alterations are subject to approval by the Physikalisch-Technische Bundesanstalt.
In case of dispute, the German text shall prevail.

Physikalisch-Technische Bundesanstalt • Bundesallee 100 • D-38116 Braunschweig

# Physikalisch-Technische Bundesanstalt

**Braunschweig und Berlin**

**SCHEDULE TO EC-TYPE-EXAMINATION CERTIFICATE PTB 00 ATEX 2080**

(18) Essential health and safety requirements

met by standards

Zertifizierungsstelle Explosionsschutz
By order:

Braunschweig, July 20, 2000

In the absence of Dr.-Ing. U. Johannsmeyer
Regierungsdirektor



EC-type-examination Certificates without signature and official stamp shall not be valid. The certificates may be circulated only without alteration. Extracts or alterations are subject to approval by the Physikalisch-Technische Bundesanstalt.
In case of dispute, the German text shall prevail.

Physikalisch-Technische Bundesanstalt • Bundesallee 100 • D-38116 Braunschweig

**Physikalisch-Technische Bundesanstalt**
**Braunschweig and Berlin**

(1) **EC-Type Examination Certificate**

(2) Equipment and Protective Systems Intended for use in Potentially Explosive Atmospheres - **Directive 94/9/EC**

(3) EC-Type Examination Certificate Number

**PTB 00 ATEX 2080**

(4) Equipment: Transformer Isolated Switching Amplifier Type K*D*-SR*-Ex*.W.*

(5) Manufacturer: Pepperl + Fuchs GmbH

(6) Address: Königsberger Allee 87, D-68307 Mannheim

(7) The design of this electrical apparatus as well as the different permissible versions are specified in the annex to this type examination certificate.

(8) Physikalisch-Technische Bundesanstalt being notified body number 0102 in accordance with Article 9 of the Council Directive of the European Communities of 23 March 1994 (94/9/EC) confirms the compliance with the Essential Health and Safety Requirements relating to the design and construction of equipment and protective systems intended for use in potentially explosive atmospheres given in Annex II to the Directive.

The results of the examination are recorded in the confidential test report PTB Ex 00-20205.

(9) Compliance with the Essential Health and Safety Requirements has been assured by compliance with

**EN 50014:1997** **EN 50020:1994**

(10) If the sign "**X**" is placed after the certificate number, it indicates that the equipment is subject to special conditions for safe use specified in the schedule to this certificate.

(11) This EC-type examination certificate relates only to the design and construction of the specified equipment in accordance with the Directive 94/9/EC. Further requirements of this Directive apply to the manufacture and supply of this equipment.

(12) The marking of the equipment shall include the following details:

**II (1) G D** **[EEx ia] IIC**

Certification Body Explosion Protection
on behalf of

(signature)

Dr-Ing U. Johannsmeyer, in absence
Senior Government Official

Braunschweig, 20 July 2000



EC-Type Examination Certificates without a signature and without an official stamp are not valid.
This EC-Type Examination Certificate may only be reproduced unaltered.
Extracts or changes require permission by Physikalisch-Technische Bundesanstalt.

Physikalisch-Technische Bundesanstalt • Bundesallee 100 • D-38116 Braunschweig

certified translation
Mannheim, 4th August 2000
I. Plum
pp I. Plum

TÜV PRODUCT SERVICE GMBH
Dudenstraße 28
68167 Mannheim

(13) **SCHEDULE**

(14) **EC-Type Examination Certificate PTB 00 ATEX 2080**

(15) Description of the Equipment

The Transformer Isolated Switching Amplifier Type K*D*-SR*-Ex*.W.* is designed for the transmission of control commands from the hazardous area to the non-hazardous area and for the galvanic isolation of intrinsically safe and non intrinsically safe circuits.

The max. permissible ambient temperature is 60°C.

Electrical parameters

Supply circuit (terminals 14 and 15 alt. power rail contacts): DC 20 ...30 V DC
safety relevant maximum voltage: $V_m$ = 253V AC
$V_m$ = 125V DC

Output circuits (terminals 7, 8, 9 alt. 10, 11, 12):

| AC | DC | |
|---|---|---|
| $V \leq 253V$ | $V \leq 40V$ | $V \leq 130V$ |
| $I \leq 2A$ | $I \leq 2A$ | $I \leq 20mA$ |
| $P_a \leq 500VA$ | $P \leq 80W$ | |
| $pf \geq 0.7$ | | |

safety relevant maximum voltage: $V_m$ = 253V AC

Input circuits (terminals 1, 2, 3 alt. 4, 5, 6): for ignition protection intrinsic safety EEx ia IIA/IIB/IIC
alt. EEx ib IIA/IIB/IIC
maximum values for each circuit:
$V_o$ = 10.5 V
$I_o$ = 13 mA
$P_o$ = 34 mW
$R_i$ = 807.7 Ω
linear characteristic
$C_i \approx 0$
$L_i \approx 0$

| type of protection | EEx ia alt. ib | | |
|---|---|---|---|
| | IIA | IIB | IIC |
| max. permissible ext. inductance $L_o$ | 1 H | 840 mH | 210 mH |
| max. permissible ext. capacitance $C_o$ | 75 µF | 16.8 µF | 2.41 µF |



EC-Type Examination Certificates without a signature and without an official stamp are not valid.
This EC-Type Examination Certificate may only be reproduced unaltered.
Extracts or changes require permission by Physikalisch-Technische Bundesanstalt.

Physikalisch-Technische Bundesanstalt • Bundesallee 100 • D-38116 Braunschweig

certified translation
Mannheim, 4th August 2000
J. Plum
pp I. Plum

TÜV PRODUCT SERVICE GMBH
Dudenstraße 28
68167 Mannheim

## Schedule to EC-Type Examination Certificate PTB 00 ATEX 2080

In the presence of concentrated capacitance and/or inductance in the intrinsically safe input circuit the maximum permissible external capacitance and inductance for the circuits of category "ia" are to be taken from the following table.

| type of protection | EEx ia | |
|---|---|---|
| | IIB | IIC |
| max. permissible ext. inductance $L_o$ | 7 mH | 3 mH |
| max. permissible ext. capacitance $C_o$ | 2.1 µF | 620 nF |

When interconnecting both intrinsically safe input circuits the following maximum values apply:
$V_o$ = 10.5 V
$I_o$ = 26 mA
$P_o$ = 68 mW
$R_i$ = 403.9 Ω
linear characteristic
$C_i \approx 0$
$L_i \approx 0$

| type of protection | EEx ia alt ib | | |
|---|---|---|---|
| | IIA | IIB | IIC |
| max. permissible ext. inductance $L_o$ | 420 mH | 210 mH | 52 mH |
| max. permissible ext. capacitance $C_o$ | 75 µF | 16.8 µF | 2.41 µF |

In the presence of concentrated capacitance and/or inductance in the interconnected intrinsically safe input circuits the maximum permissible external capacitance and inductance for the circuits of category "ia" are to be taken from the following table.

| type of protection | EEx ia | |
|---|---|---|
| | IIB | IIC |
| max. permissible ext. inductance $L_o$ | 7 mH | 3 mH |
| max. permissible ext. capacitance $C_o$ | 2.1 µF | 590 nF |

The intrinsically safe input circuits are electrically safely isolated against all other electrical circuits up to the peak value of the nominal voltage of 375V.

(16) Test Report PTB Ex 00-20205

(17) Special Conditions

none



EC-Type Examination Certificates without a signature and without an official stamp are not valid.
This EC-Type Examination Certificate may only be reproduced unaltered.
Extracts or changes require permission by Physikalisch-Technische Bundesanstalt.

Physikalisch-Technische Bundesanstalt • Bundesallee 100 • D-38116 Braunschweig

certified translation
Mannheim, 4th August 2000
J. Plum
pp I. Plum

TÜV PRODUCT SERVICE GMBH
Dudenstraße 28
68167 Mannheim

**Physikalisch-Technische Bundesanstalt**
**Braunschweig and Berlin**

## Schedule to EC-Type Examination Certificate PTB 00 ATEX 2080

(18) Essential Health and Safety Requirements

covered by standards

Certification Body Explosion Protection
on behalf of

(signature)

Dr-Ing U. Johannsmeyer, in absence
Senior Government Official

Braunschweig, 20 July 2000



EC-Type Examination Certificates without a signature and without an official stamp are not valid.
This EC-Type Examination Certificate may only be reproduced unaltered.
Extracts or changes require permission by Physikalisch-Technische Bundesanstalt.

Physikalisch-Technische Bundesanstalt • Bundesallee 100 • D-38116 Braunschweig

certified translation
Mannheim, 4th August 2000
J. Plum
pp I. Plum

TÜV PRODUCT SERVICE GMBH
Dudenstraße 28
68167 Mannheim

# Physikalisch-Technische Bundesanstalt

**Braunschweig und Berlin**

## 1st SUPPLEMENT

**according to Directive 94/9/EC Annex III.6**

## to EC-TYPE-EXAMINATION CERTIFICATE PTB 00 ATEX 2080

## (Translation)

Equipment: Isolation and Switching Amplifier type K*D*-SR*-Ex*.W.*

Marking: Ex **II (1) G D [EEx ia] IIC**

Manufacturer: Pepperl + Fuchs GmbH

Address: Königsberger Allee 87
D-68307 Mannheim, Germany

Description of supplements and modifications

The isolation and switching amplifier of type K*D*-SR*-Ex*.W.* has been technically modified and may in future also be manufactured and operated according to the test documents of test report PTB Ex 01-21062. The modifications concern the internal structure, the enclosure, and the "electrical data".

The "electrical data" are extended to additionally include a fault signal output as well as an additional pair of values for the output circuits when a.c. operated.

The EC type-examination certificate is extended to additionally include the isolation and switching amplifier type **K*D*-SR*-Ex2.W.IR**. This type differs from the previously certified versions only in the firmware.

All other details apply without any changes for this first supplement.

Electrical data

| | | | | | | | | | | | | |
|---|---|---|---|---|---|---|---|---|---|---|---|---|
| Fault signal output ..... (power rail contact PR4) | Safety voltage, max: | | | | | | $U_m$= | 40 | V DC | | | |
| Output circuits..... (terminals 7, 8, 9 and 10, 11, 12) | AC | | | | | | DC | | | | | |
| | U ≤ 253 | V | U ≤126.5 | V | | | U ≤ | 40 | V | U ≤ 130 | V | |
| | I ≤ 2 | A | I ≤ 4 | A | | | I ≤ | 2 | A | I ≤ 20 | mA | |
| | S ≤ 500 | VA | | | | | P ≤ | 80 | W | | | |
| | cosφ ≥ 0.7 | | | | | | | | | | | |
| | Safety voltage, max.: | | | | | | $U_m$= | 253 | V AC | | | |



EC-type-examination Certificates without signature and official stamp shall not be valid. The certificates may be circulated only without alteration. Extracts or alterations are subject to approval by the Physikalisch-Technische Bundesanstalt. In case of dispute, the German text shall prevail.

# Physikalisch-Technische Bundesanstalt

**Braunschweig und Berlin**

**1st SUPPLEMENT TO EC-TYPE-EXAMINATION CERTIFICATE PTB 00 ATEX 2080**

Test report: PTB Ex 01-21062

Zertifizierungsstelle Explosionsschutz
By order:

Braunschweig, 13 September 2001

Dr.-Ing. U. Johannsmeyer
Regierungsdirektor



EC-type-examination Certificates without signature and official stamp shall not be valid. The certificates may be circulated only without alteration. Extracts or alterations are subject to approval by the Physikalisch-Technische Bundesanstalt.
In case of dispute, the German text shall prevail.

Physikalisch-Technische Bundesanstalt • Bundesallee 100 • D-38116 Braunschweig

(1) # Konformitätsaussage

(2) Geräte und Schutzsysteme zur bestimmungsgemäßen Verwendung in explosionsgefährdeten Bereichen - **Richtlinie 94/9/EG**

(3) Prüfbescheinigungsnummer

**TÜV 99 ATEX 1493 X**

(4) Gerät: Trennschaltverstärker Typ KFD2-SR2-Ex2.2S***

(5) Hersteller: Pepperl + Fuchs GmbH

(6) Anschrift: Postfach 68301
D-68307 Mannheim

(7) Die Bauart dieses Gerätes sowie die verschiedenen zulässigen Ausführungen sind in der Anlage zu dieser Prüfbescheinigung festgelegt.

(8) Der TÜV Hannover/Sachsen-Anhalt e.V., TÜV CERT-Zertifizierungsstelle, bescheinigt als benannte Stelle Nr. 0032 nach Artikel 9 der Richtlinie des Rates der Europäischen Gemeinschaften vom 23. März 1994 (94/9/EG) die Erfüllung der grundlegenden Sicherheits- und Gesundheitsanforderungen für die Konzeption und den Bau von Geräten und Schutzsystemen zur bestimmungsgemäßen Verwendung in explosionsgefährdeten Bereichen gemäß Anhang II der Richtlinie.

Die Ergebnisse der Prüfung sind in dem vertraulichen Prüfbericht Nr. 99/PX24390 festgelegt.

(9) Die grundlegenden Sicherheits- und Gesundheitsanforderungen werden erfüllt durch Übereinstimmung mit

**EN 50 021: 1999**

(10) Falls das Zeichen "X" hinter der Bescheinigungsnummer steht, wird auf besondere Bedingungen für die sichere Anwendung des Gerätes in der Anlage zu dieser Bescheinigung hingewiesen.

(11) Diese Konformitätsaussage bezieht sich nur auf die Konzeption und den Bau des festgelegten Gerätes gemäß Richtlinie 94/9/EG. Weitere Anforderungen dieser Richtlinie gelten für die Herstellung und das Inverkehrbringen dieses Gerätes.

(12) Die Kennzeichnung des Gerätes muß die folgenden Angaben enthalten:

**II 3 G EEx n A C IIC T4**

**TÜV Hannover/Sachsen-Anhalt e.V.**
**TÜV CERT-Zertifizierungsstelle**
**Am TÜV 1**
**D-30519 Hannover**

**Hannover, 26.10.1999**

**Der Leiter**



AP/CERTNORD 10.98

**Diese Konformitätsaussage darf nur unverändert weiterverbreitet werden.**
**Auszüge oder Änderungen bedürfen der Genehmigung des TÜV Hannover/Sachsen-Anhalt e.V.**

(13) **ANLAGE**

## (14) Konformitätsaussage Nr. TÜV 99 ATEX 1493 X

(15) Beschreibung des Gerätes

Der Trennschaltverstärker Typ KFD2-SR2-Ex2.2S*** dient zur Übertragung von Signalen aus dem explosionsgefährdeten Bereich in den nicht explosionsgefährdeten Bereich. Der Trennschaltverstärker darf in explosionsgefährdeten Bereichen der Zone 2 errichtet werden.
Das Gerät ist ein- oder zweikanalig ausgeführt.
Die höchstzulässige Umgebungstemperatur beträgt 60°C.

Elektrische Daten

| | |
|---|---|
| Speisespannung ..... (Klemmen 14 und 15) | Nennwerte:<br>20 ... 30 V DC<br>Die Versorgung darf auch über den Einspeisebaustein Typ KFD2-EB... (TÜV 98 ATEX 1273 X) erfolgen. |
| Kontaktstromkreise ..... (Klemmen 7/8/9 und 10/11/12) | Nennwerte:<br>Gleichspannung ≤40 V; ≤2 A<br>Wechselspannung ≤50 V; ≤2 A<br>Bemessungsspannung 60 V |
| Daten- und Signalstromkreise ..... (Klemmen 1/2/3 und 4/5/6) | elektrische Daten gemäß Angaben des Herstellers und gültiger Konformitätsbescheinigung bzw. EG-Baumuster-prüfbescheinigung |

(16) Prüfungsunterlagen bestehend aus 7 Seiten und 10 Zeichnungen sind im Prüfbericht aufgelistet.

(17) Besondere Bedingungen

1. Der Trennschaltverstärker Typ KFD2-SR2-Ex2.2S*** ist so zu errichten, daß eine Schutzart von mindestens IP 54 gemäß IEC 529 erreicht wird.

2. Die zulässigen Höchstwerte für die eigensicheren Stromkreise sind der gültigen Konformitätsbescheinigung bzw. EG-Baumusterprüfbescheinigung zu entnehmen.

3. An nichteigensichere Stromkreise in der Zone 2 dürfen nur betriebsmäßig nicht funkende Geräte angeschlossen werden, welche für den Betrieb in explosionsgefährdeten Bereichen der Zone 2 und die am Einsatzort vorliegenden Bedingungen geeignet sind.

BA 02 11.98 1.000.000

4. Beim Anschluß von nicht eigensicheren Stromkreisen an die Kontaktstromkreise sind Maßnahmen zu treffen, daß die Bemessungsspannung durch vorübergehende Störungen um nicht mehr als 40% überschritten wird.

5. Das Betätigen der Schalter sowie das Verbinden und Trennen der Anschlüsse von nicht eigensicheren Stromkreisen unter Spannung ist nur ist nur bei der Installation oder für Reparaturzwecke zulässig.

(18) Grundlegende Sicherheits- und Gesundheitsanforderungen

Keine zusätzlichen

Translation

(1) # STATEMENT OF CONFORMITY

(2) Equipment or protective system intended for use in potentially explosive atmospheres - **Directive 94/9/EC**

(3) Test certificate number

**TÜV 99 ATEX 1493 X**

| | | |
|---|---|---|
| (4) | Equipment or Protective System: | Isolated Amplifier type KFD2-SR2-Ex2.2S*** |
| (5) | Manufacturer: | Pepperl + Fuchs GmbH |
| (6) | Address: | Postfach 68301<br>D-68307 Mannheim |

(7) This equipment or protective system and any acceptable variation thereto is specified in the schedule to this certificate and the documents therein referred to.

(8) The TÜV Hannover/Sachsen-Anhalt e.V., TÜV Certification Body N° 0032 in accordance with Article 9 of the Council Directive 94/9/EC of March 23, 1994, certifies that this equipment or protective system has been found to comply with the Essential Health and Safety Requirements relating to the design and construction of equipment and protective systems intended for use in potentially explosive atmospheres given in Annex II to the Directive.

The examination and test results are recorded in confidential report N° 99/PX/24390.

(9) Compliance with the Essential Health and Safety Requirements has been assured by compliance with:

**EN 50 021: 1999**

(10) If the sign "X" is placed after the certification number, it indicates that the equipment or protective system is subject to special conditions for safe use specified in the schedule to this certificate.

(11) This EC-type examination certificate relates only to the design and construction of the specified equipment or protective system. Further requirements of this Directive apply to the manufacture and placing on the market of this equipment or protective system.

(12) The marking of the equipment or protective system shall include the following:

**Ex II 3G EEx n A C IIC T4**

**TÜV Hannover/Sachsen-Anhalt e.V.**
**TÜV CERT-Zertifizierungsstelle**
**Am TÜV 1**
**D-30519 Hannover**

**Head of the Certification Body**

**Hannover, 1999-10-26**



AP/CERTNORD 10.98

**This statement of conformity may only be reproduced without any change, schedule included. Excerpts or changes shall be allowed by the TÜV Hannover/Sachsen-Anhalt e.V.**

(13) **SCHEDULE**

(14) **STATEMENT OF CONFORMITY N° TÜV 99 ATEX 1493 X**

(15) Description of equipment or protective system

The Isolated Amplifier type KFD2-SR2-Ex2.2S*** is used for the transmission of signals from the explosion hazardous area into the non explosion hazardous area. The separating switch amplifier type may be installed in explosion hazardous areas of the zone 2.
The device is executed with one or two channels.
The maximum permissible ambient temperature is 60°C.

Electrical data

| | |
|---|---|
| Supply voltage ..... (Terminals 14 and 15) | Nominal values:<br>20 ... 30 V d. c.<br>The supply may also be effected by the power feed module type KFD2-EB... (TÜV 98 ATEX 1273 X). |
| Contact circuits ..... (Terminals 7/8/9 and 10/11/12) | Nominal values:<br>d. c. : ≤ 40 V; ≤ 2A<br>a. c. : ≤ 50 V, ≤ 2A<br>Rated voltage 60 V |
| Data and signal circuits ..... (Terminals 1/2/3 and 4/5/6) | Electrical data according to manufacturers specifications and the valid certificate of conformity resp. EC type examination certificate |

(16) Test documents consisting of 7 pages and 10 drawings are listed in the test report.

(17) Special conditions for safe use

1. The separating switch amplifier type KFD2-SR2-Ex2.2S*** has to be erected in such a way, that a degree of protection of at least IP 54 according to IEC 529 is reached.

2. The permissible maximum values have to be taken from the valid certificate of conformity resp. EC-type examination certificate.

3. Only devices non sparking in normal operation, which are suitable for the operation in explosion hazardous areas of the zone 2 and the conditions available at the place of operation, are allowed to be connected to non intrinsically safe circuits in the zone 2.

4. If non intrinsically safe circuits are connected to the contact circuits, it has to be ensured, that the rated voltage is exceeded not more than 40% by transient disturbances.

5. The operation of the switches and the connecting and disconnecting of the connectors of the non intrinsically safe circuits under voltage, as well is only permitted during installation or for repair purposes.

(18) Essential Health and Safety Requirements

no additional ones

# 1. ERGÄNZUNG
# zur
# Konformitätsaussage Nr. TÜV 99 ATEX 1493 X

der Firma: Pepperl + Fuchs GmbH
Königsberger Allee 87
D-68307 Mannheim

Die "Elektrischen Daten" und die "Besonderen Bedingungen" für den Trennschaltverstärker Typ KFD2-SR2-Ex2.2S*** werden geändert und lauten wie folgt:

Speisespannung ..... Nennwerte:
(Klemmen 14 und 15) 20 ... 30 V DC
Die Versorgung darf auch über den Einspeisebaustein Typ KFD2-EB... (TÜV 00 ATEX 1618 X) erfolgen.

Besondere Bedingungen

1. Der Trennschaltverstärker Typ KFD2-SR2-Ex2.2S*** ist so zu errichten, dass eine Schutzart von mindestens IP 54 gemäß EN 60529 erreicht wird.

2. Die zulässigen Höchstwerte für die eigensicheren Stromkreise sind der gültigen Konformitätsbescheinigung bzw. EG-Baumusterprüfbescheinigung zu entnehmen.

3. An nichteigensichere Stromkreise in der Zone 2 dürfen Geräte angeschlossen werden, welche für den Betrieb in explosionsgefährdeten Bereichen der Zone 2 und die am Einsatzort vorliegenden Bedingungen geeignet sind (Herstellererklärung oder Zertifikat einer Prüfstelle).

4. Beim Anschluss von nicht eigensicheren Stromkreisen an die Kontaktstromkreise sind Maßnahmen zu treffen, dass die Bemessungsspannung durch vorübergehende Störungen um nicht mehr als 40% überschritten wird.

5. Das Betätigen der Schalter sowie das Verbinden und Trennen der Anschlüsse von nicht eigensicheren Stromkreisen unter Spannung ist nur ist nur bei der Installation, der Wartung oder für Reparaturzwecke zulässig.
   Anmerkung: Das zeitliche Zusammentreffen von explosionsfähiger Atmosphäre und Installation, Wartung bzw. Reparatur wird in der Zone 2 als unwahrscheinlich bewertet.

Alle übrigen Angaben gelten unverändert für diese 1. Ergänzung.

Die Prüfungsunterlagen sind im Prüfbericht Nr. 00PX19000 aufgeführt.

**TÜV Hannover/Sachsen-Anhalt e.V.**
**TÜV CERT-Zertifizierungsstelle**
**Am TÜV 1**
**D-30519 Hannover**

**Hannover, 14.09.2000**

Ptrobel

**Der Leiter**



BA 02 11.98 1.000.000

**Translation**

## 1. SUPPLEMENT to

## STATEMENT OF CONFORMITY No. TÜV 99 ATEX 1493 X

of the company : Pepperl + Fuchs GmbH
Königsberger Allee 87
D-68307 Mannheim

The "Electrical data" and the "Special conditions for safe use" for the Isolated Amplifier type KFD2-SR2-Ex2.2S*** are changed and read as follows:

Electrical data

| | |
|---|---|
| Supply voltage ..... | Nominal values: |
| (Terminals 14 and 15) | 20 ... 30 V d. c. |
| | The supply may also be effected by the power feed module type KFD2-EB... (TÜV 00 ATEX 1618 X). |

Special conditions for safe use

1. The separating switch amplifier type KFD2-SR2-Ex2.2S*** has to be erected in such a way, that a degree of protection of at least IP 54 according to EN 60529 is reached.

2. The permissible maximum values have to be taken from the valid certificate of conformity resp. EC-type examination certificate.

3. Only devices, which are suitable for the operation in explosion hazardous areas of the zone 2 and the conditions available at the place of operation (Declaration of conformity or certificate of a testing department), are allowed to be connected to non intrinsically safe circuits in the zone 2.

4. If non intrinsically safe circuits are connected to the contact circuits, it has to be ensured, that the rated voltage is exceeded not more than 40% by transient disturbances.

5. The operation of the switches and the connecting and disconnecting of the connectors of the non intrinsically safe circuits under voltage, as well is only permitted during installation, for maintenance or for repair purposes.
   Note: The temporal coincidence of explosion hazardous atmosphere and installation, maintenance resp. repair purposes is assessed as unlikely.

All other details remain unchanged for this 1. supplement.

The test documents are listed in the test report no. 00PX19000

**TÜV Hannover/Sachsen-Anhalt e.V.**
**TÜV CERT-Zertifizierungsstelle**
**Am TÜV 1**
**D-30519 Hannover**

**Hannover, 2000-09-14**

**Head of the**
**Certification Body**



BA 02 11.98 1.000.000

# 2. ERGÄNZUNG
# zur
# Konformitätsaussage Nr. TÜV 99 ATEX 1493 X

der Firma: Pepperl + Fuchs GmbH
Königsberger Allee 87
D-68307 Mannheim

Die Konformitätsaussage Nr. TÜV 99 ATEX 1493 X ist künftig auch für die Geräte gemäß der folgenden Tabelle gültig:

| Gerät | Typ |
|---|---|
| Grenzwertschalter | KFD2-GU-Ex1 |
| Trennschaltverstärker | KFD2-SR2-Ex1.W |
| Trennschaltverstärker | KFD2-SR2-Ex1.W.LB |
| Trennschaltverstärker | KFD2-SR2-Ex2.W |
| Trennschaltverstärker | KFD2-SH-Ex1 |
| Trennschaltverstärker | KFD2-SH-Ex1.T.OP |

Die höchstzulässige Umgebungstemperatur beträgt 60°C.

Elektrische Daten

Speisespannung — Nennwerte:

Typen KFD2-SR2-Ex1.W, KFD2-SR2-Ex1.W.LB und KFD2-SR2-Ex2.W ..... 20 ... 30 V DC
(Klemmen 14 und 15 bzw. Power Rail)

Typ KFD2-GU-Ex1 ..... 20 ... 35 V DC
(Klemmen 14 und 15 bzw. Power Rail)

Typ KFD2-SH-Ex1 ..... 20 ... 35 V DC
(Klemmen 22, 23 und 24 bzw. Power Rail)

Typ KFD2-SH-Ex1.T.OP .... 20 ... 30 V DC
(Power Rail)

Die Versorgung darf auch über den Einspeisebaustein Typ KFD2-EB... (TÜV 00 ATEX 1618 X) erfolgen.

| Kontaktstromkreise | DC | AC |
|---|---|---|
| Typen KFD2-SR2-Ex1.W, KFD2-SR2-Ex1.W.LB und KFD2-SR2-Ex2.W ..... (Klemmen 7, 8, 9 bzw. 10, 11, 12) | $U_n \leq 40$ V, $I \leq 2$A | $U_n \leq 50$ V, $I \leq 4$A |
| Typ KFD2-GU-Ex1 ..... (Klemmen 14 und 15 bzw. Power Rail) | $U_n \leq 40$ V, $I \leq 2$A | $U_n \leq 50$ V, $I \leq 2$A |
| Typ KFD2-SH-Ex1 ..... (Klemmen 22, 23 und 24 bzw. Power Rail) | $U_n \leq 24$ V, $I \leq 1$A | $U_n \leq 50$ V, $I \leq 1$A |
| Typ KFD2-SH-Ex1.T.OP .... | $U_n \leq 50$ V, $I \leq 0{,}25$ A | |

| Sammel-Störmeldeausgang | |
|---|---|
| Typen KFD2-SR2-Ex1.W, KFD2-SR2-Ex1.W.LB und KFD2-SR2-Ex2.W ..... (Power Rail) | max. zulässige Last: 25 mA<br>Bei Verbindung mit dem Einspeisebaustein Typ KFD2-EB... (TÜV 00 ATEX 1618 X) ist diese Bedingung erfüllt. |

| Übrige Daten- und Signalstromkreise ..... | elektrische Daten gemäß Angaben des Herstellers und gültiger Konformitätsbescheinigung bzw. EG-Baumuster-prüfbescheinigung |
|---|---|

Die „Besondere Bedingungen“ werden wie folgt geändert:

1. Die Geräte der der K-Serie Typen KFD2-...-... sind so zu errichten, dass eine Schutzart von mindestens IP 54 gemäß IEC 529 erreicht wird.
5. Die Verwendung des Programmiersteckers und das Betätigen der Schalter sowie das Verbinden und Trennen der Anschlüsse von nicht eigensicheren Stromkreisen unter Spannung ist nur ist nur bei der Installation oder für Reparaturzwecke zulässig. Anmerkung: Das zeitliche Zusammentreffen von explosionsfähiger Atmosphäre und Installation, Wartung bzw. Reparatur wird in der Zone 2 als unwahrscheinlich bewertet.

Alle übrigen Angaben gelten unverändert für diese 2. Ergänzung.

Die Prüfungsunterlagen sind im Prüfbericht Nr. 02YEX 159 689 aufgeführt.

**TÜV NORD CERT GmbH & Co. KG**
**TÜV CERT-Zertifizierungsstelle**
**Am TÜV 1**
**D-30519 Hannover**
**Tel.: 0511 986-1470**
**Fax: 0511 986-2555**

**Hannover, 03.06.2002**

**Der Leiter**

**Translation**

## 2. SUPPLEMENT to

## STATEMENT OF CONFORMITY No. TÜV 99 ATEX 1493 X

of the company : Pepperl + Fuchs GmbH
Königsberger Allee 87
D-68307 Mannheim

In the future, the Statement of Conformity TÜV 99 ATEX 1493 X also applies to the devices according to the following table:

| Device | Type |
|---|---|
| Trip Amplifier | KFD2-GU-Ex1 |
| Transformer Isolated Barrier | KFD2-SR2-Ex1.W |
| Transformer Isolated Barrier | KFD2-SR2-Ex1.W.LB |
| Transformer Isolated Barrier | KFD2-SR2-Ex2.W |
| Transformer Isolated Barrier | KFD2-SH-Ex1 |
| Transformer Isolated Barrier | KFD2-SH-Ex1.T.OP |

The maximum permissible ambient temperature is 60°C.

Electrical data

Supply voltage — Nominal values:

Types KFD2-SR2-Ex1.W, KFD2-SR2-Ex1.W.LB and KFD2-SR2-Ex2.W ..... 20 ... 30 V d. c.
(Terminals 14 and 15 resp. Power Rail)

Type KFD2-GU-Ex1 ..... 20 ... 35 V d. c.
(Terminals 14 and 15 resp. Power Rail)

Type KFD2-SH-Ex1 ..... 20 ... 35 V d. c.
(Terminals 22, 23 and 24 resp. Power Rail)

Type KFD2-SH-Ex1.T.OP ..... 20 ... 30 V DC
(Power Rail) The supply may also be effected by the power feed module type KFD2-EB... (TÜV 00 ATEX 1618 X)

| Contact circuits | DC | AC |
|---|---|---|
| Types KFD2-SR2-Ex1.W, KFD2-SR2-Ex1.W.LB and KFD2-SR2-Ex2.W ..... (Terminals 7, 8, 9 resp. 10, 11, 12) | $U_n \leq 40$ V, I ≤ 2A | $U_n \leq 50$ V, I ≤ 4A |
| Type KFD2-GU-Ex1 ..... (Terminals 14 and 15 resp. Power Rail) | $U_n \leq 40$ V, I ≤ 2A | $U_n \leq 50$ V, I ≤ 2A |
| Typ KFD2-SH-Ex1 ..... (Terminals 22, 23 and 24 resp. Power Rail) | $U_n \leq 24$ V, I ≤ 1A | $U_n \leq 50$ V, I ≤ 1A |
| Typ KFD2-SH-Ex1.T.OP ..... | $U_n \leq 50$ V, I ≤ 0,25 A | |

| | |
|---|---|
| Collective error message output | |
| Types KFD2-SR2-Ex1.W, KFD2-SR2-Ex1.W.LB and KFD2-SR2-Ex2.W ..... (Power Rail) | max. permissible load: 25 mA<br>If connected with the power feed module type KFD2-EB... (TÜV 00 ATEX 1618 X), this requirement is fulfilled. |
| Remainder data- and signal circuits ..... | electrical data according the manufacturer´s specifications resp. valid EC-Type Examination Certificate or Certificate of Conformity |

The „Special conditions for safe use“ are changed as follows:

1. The devices of the K-series types KFD2-...-... have to be erected in such a way, that a degree of protection of at least IP 54 according to IEC 529 is reached.
5. The operation of the programming jack and connecting and disconnecting of the connectors of the non intrinsically safe circuits under voltage is only permitted during installation or for repair purposes.
   Note: The temporal coincidence of explosion hazardous atmosphere and installation, maintenance resp. repair purposes is assessed as unlikely.

All other details remain unchanged for this 2. supplement.

The test documents are listed in the test report no. 02YEX 159 689.

**TÜV Hannover/Sachsen-Anhalt e.V.**
**TÜV CERT-Zertifizierungsstelle**
**Am TÜV 1**
**D-30519 Hannover**

**Hanover, 2002-06-03**

**Head of the**
**Certification Body**

# Physikalisch-Technische Bundesanstalt

**Braunschweig und Berlin**

PTB

*Doc No: 16410-2*

(1) # EG-Baumusterprüfbescheinigung

(2) Geräte und Schutzsysteme zur bestimmungsgemäßen Verwendung in explosionsgefährdeten Bereichen - **Richtlinie 94/9/EG**

(3) EG-Baumusterprüfbescheinigungsnummer

**PTB 99 ATEX 3103**

(4) Gerät: Abzweigdosen bzw. Klemmenkästen Typ 8118/...-...

(5) Hersteller: R. Stahl Schaltgeräte GmbH

(6) Anschrift: Bergstraße 2, D-74653 Künzelsau

(7) Die Bauart dieses Gerätes sowie die verschiedenen zulässigen Ausführungen sind in der Anlage zu dieser Baumusterprüfbescheinigung festgelegt.

(8) Die Physikalisch-Technische Bundesanstalt bescheinigt als benannte Stelle Nr. 0102 nach Artikel 9 der Richtlinie des Rates der Europäischen Gemeinschaften vom 23. März 1994 (94/9/EG) die Erfüllung der grundlegenden Sicherheits- und Gesundheitsanforderungen für die Konzeption und den Bau von Geräten und Schutzsystemen zur bestimmungsgemäßen Verwendung in explosionsgefährdeten Bereichen gemäß Anhang II der Richtlinie.

Die Ergebnisse der Prüfung sind in dem vertraulichen Prüfbericht PTB Ex 99-30041 festgelegt.

(9) Die grundlegenden Sicherheits- und Gesundheitsanforderungen werden erfüllt durch Übereinstimmung mit

EN 50 014:1997 EN 50 019:1994 EN 50 020:1994

(10) Falls das Zeichen „X" hinter der Bescheinigungsnummer steht, wird auf besondere Bedingungen für die sichere Anwendung des Gerätes in der Anlage zu dieser Bescheinigung hingewiesen.

(11) Diese EG-Baumusterprüfbescheinigung bezieht sich nur auf Konzeption und Bau des festgelegten Gerätes gemäß Richtlinie 94/9/EG. Weitere Anforderungen dieser Richtlinie gelten für die Herstellung und das Inverkehrbringen dieses Gerätes.

(12) Die Kennzeichnung des Gerätes muß die folgenden Angaben enthalten:

**II 2 G EEx e II T6/T5 bzw. EEx ia/ib IIA/IIB/IIC T6/T5**

Zertifizierungsstelle Explosionsschutz
Im Auftrag

Dr.-Ing. U. Engel
Regierungsdirektor

Braunschweig, 19. April 1999

PHYSIKALISCH-TECHNISCHE BUNDESANSTALT II



EG-Baumusterprüfbescheinigungen ohne Unterschrift und ohne Siegel haben keine Gültigkeit.
Diese EG-Baumusterprüfbescheinigung darf nur unverändert weiterverbreitet werden.
Auszüge oder Änderungen bedürfen der Genehmigung der Physikalisch-Technischen Bundesanstalt.

Physikalisch-Technische Bundesanstalt • Bundesallee 100 • D-38116 Braunschweig

(13) # Anlage

(14) ## EG-Baumusterprüfbescheinigung PTB 99 ATEX 3103

(15) Beschreibung des Gerätes

Abzweigdosen und Klemmenkästen aus Polyesterharz mit einem Oberflächenwiderstand ≥ 1GΩ, Typenreihe 8118/...-..., für ortsfeste Montage, mit eingebauten - gesondert bescheinigten - Reihen- oder Mantelklemmen für nichteigensichere oder - gesondert bescheinigte - eigensichere Stromkreise.

Kennzeichnung für die Zündschutzart

Bestückung mit Klemmen

| | |
|---|---|
| - nur für nichteigensichere Stromkreise | EEx e II T6 bzw. T5 bei $T_{amb} \leq +55$ °C |
| - nur für eigensichere Stromkreise | EEx ia/ib IIC/IIB /IIA T6 |
| - nur für eigensichere Stromkreise | EEx ia/ib IIC/IIB /IIA T5 bei $T_{amb} \leq +55$ °C |

Technische Daten

| | |
|---|---|
| Bemessungsspannung: | max. 1.100 V<br>(je nach Arbeitsspannungsbereich der verwendeten Klemmen) |

Bemessungsstrom, Leiterzahl und Leiterquerschnitt sind in den zugehörigen Beiblättern festgelegt.

| | |
|---|---|
| Umgebungstemperaturbereich, max.: | $-50$ °C $\leq T_{amb} \leq +55$ °C |
| Berührungs-, Fremdkörper- und Wasserschutz: | mind. IP 54 nach EN 60 529: 1991 |

Hinweis

Die Schutzart - mindestens IP 54 - wird nur bei sachgerechter Verwendung der geprüften Dichtungen, Kabel- und Leitungseinführungen, sowie der Verschlußstopfen erreicht.

Hinweis des Herstellers "Nur mit feuchtem Tuch reinigen" ist zu beachten.

Die Eignung für geringe Umgebungstemperaturen ist durch eine gesonderte Kennzeichnung sichtbar. Es werden nur solche - gesondert bescheinigte – Dichtungen, Ein- und Anbauteile verwendet, die für diese Temperaturen geeignet sind. Weitere Hinweise des Herstellers sind zu beachten.

(16) Prüfbericht PTB Ex 99-30041 (bestehend aus 6 Seiten, Beschreibung und 2 Zeichnungen)

(17) Besondere Bedingungen nicht zutreffend

(18) Grundlegende Sicherheits- und Gesundheitsanforderungen durch Normen erfüllt

Zertifizierungsstelle Explosionsschutz
Im Auftrag

Braunschweig, 19. April 1999

Dr.-Ing. U. Engel
Regierungsdirektor

PHYSIKALISCH-TECHNISCHE BUNDESANSTALT 11



EG-Baumusterprüfbescheinigungen ohne Unterschrift und ohne Siegel haben keine Gültigkeit.
Diese EG-Baumusterprüfbescheinigung darf nur unverändert weiterverbreitet werden.
Auszüge oder Änderungen bedürfen der Genehmigung der Physikalisch-Technischen Bundesanstalt.

Physikalisch-Technische Bundesanstalt • Bundesallee 100 • D-38116 Braunschweig

# Physikalisch-Technische Bundesanstalt

**Braunschweig und Berlin**

## 1. E R G Ä N Z U N G

**gemäß Richtlinie 94/9/EG Anhang III Ziffer 6**

## zur EG-Baumusterprüfbescheinigung PTB 99 ATEX 3103

Gerät: Abzweigdosen bzw. Klemmenkästen Typ 8118/...-...

Kennzeichnung: Ⓔx **II 2 G EEx e II T6/T5 bzw. EEx ia/ib IIA/IIB/IIC T6/T5**

Hersteller: R. STAHL Schaltgeräte GmbH

Anschrift: Am Bahnhof 30
74638 Waldenburg (Württ.)

Beschreibung der Ergänzungen und Änderungen

In die Abzweigdosen bzw. Klemmenkästen Typ 8118/...-... können - gesondert bescheinigte - Sicherungen in der Zündschutzart Vergußkapselung "m" eingebaut werden.

Das Gehäuse kann zusätzlich aus einem alternativen Polyesterharz gefertigt werden.

Die Kennzeichnung wird erweitert zu:

Ⓔx **II 2 G EEx em II T6/T5/T4 bzw. EEx ia/ib IIA/IIB/IIC T6/T5**

Technische Daten

| | | |
|---|---|---|
| Bemessungsspannung: ..... | bis | 1100 V für Klemmenkasten ohne Sicherung |
| | bis | 550 V für Klemmenkasten mit Sicherung |
| Bemessungsstrom: ..... | max. | 50 A |
| Anschlußquerschnitt: ..... | max. | 6 mm |
| Umgebungstemperaturbereich:..... | max. | -50 °C bis +55 °C |

Bemessungsstrom, Leiterzahl und Leiterquerschnitt sind in den zugehörigen Beiblättern festgelegt.

Die Zusammensetzung des Zündschutzartkurzzeichens richtet sich nach den Zündschutzarten der jeweils verwendeten Komponenten.

Die Bemessungswerte sind Höchstwerte, die tatsächlichen elektrischen Werte werden von den eingebauten elektrischen Betriebsmitteln bestimmt. Der Hersteller legt im Rahmen dieser Grenzwerte bei Einhaltung der zutreffenden Normen und abhängig von Netzbedingungen, Betriebsart, Gebrauchskategorie, usw. die endgültigen Bemessungswerte fest.



EG-Baumusterprüfbescheinigungen ohne Unterschrift und ohne Siegel haben keine Gültigkeit.
Diese EG-Baumusterprüfbescheinigung darf nur unverändert weiterverbreitet werden.
Auszüge oder Änderungen bedürfen der Genehmigung der Physikalisch-Technischen Bundesanstalt.

Physikalisch-Technische Bundesanstalt • Bundesallee 100 • D-38116 Braunschweig

# Physikalisch-Technische Bundesanstalt

**Braunschweig und Berlin**

**1. Ergänzung zur EG-Baumusterprüfbescheinigung PTB 99 ATEX 3103**

Hinweise für Herstellung und Betrieb

Die maximale Anzahl der Leiter pro Gehäusegröße in Abhängigkeit vom Querschnitt und dem zulässigen Bemessungsstrom ist den beiliegenden Beiblättern zu entnehmen.

Da das Gehäusematerial einen Oberflächenwiderstand von $10^{13}$ Ohm hat, ist der Hinweis des Herstellers "Nur mit feuchtem Tuch reinigen" zu beachten.

Prüfbericht: PTB Ex 01-11021

Zertifizierungsstelle Explosionsschutz
Im Auftrag

Braunschweig, 22. März 2001

Dr.-Ing. U. Klausmeyer
Regierungsdirektor



EG-Baumusterprüfbescheinigungen ohne Unterschrift und ohne Siegel haben keine Gültigkeit.
Diese EG-Baumusterprüfbescheinigung darf nur unverändert weiterverbreitet werden.
Auszüge oder Änderungen bedürfen der Genehmigung der Physikalisch-Technischen Bundesanstalt.

Physikalisch-Technische Bundesanstalt • Bundesallee 100 • D-38116 Braunschweig

# Physikalisch-Technische Bundesanstalt

**Braunschweig und Berlin**

## 2. ERGÄNZUNG

**gemäß Richtlinie 94/9/EG Anhang III Ziffer 6**

## zur EG-Baumusterprüfbescheinigung PTB 99 ATEX 3103

Gerät: Abzweigdosen bzw. Klemmenkästen Typ 8118/...-...

Kennzeichnung: Ⓔx **II 2 G EEx em II T6/T5/T4 bzw. EEx ia/ib IIA/IIB/IIC, T6/T5**

Hersteller: R. STAHL Schaltgeräte GmbH

Anschrift: Am Bahnhof 30, 74638 Waldenburg (Württ.), Deutschland

Beschreibung der Ergänzungen und Änderungen

Die Abzweigdosen bzw. Klemmenkästen Typ 8118/...-... mit einem Gehäuse aus Kunststoff können auch in Bereichen eingesetzt werden, in denen damit zu rechnen ist, dass eine explosionsfähige Atmosphäre aus Staub/Luft-Gemischen gelegentlich auftritt.

Die maximale Umgebungstemperatur wird auf +75 °C erhöht.

Die Abzeigdosen bzw. Klemmenkästen wurden nach den Normen EN 60079-0, EN 60079-7, EN 60079-11, EN 60079-18, EN 61241-0 und EN 61241-1 neu geprüft.

Dadurch ändert sich das Kennzeichen in:

Ⓔx **II 2 G Ex em II T6/T5/T4 bzw. Ex ia/ib IIA/IIB/IIC T6/T5**

Ⓔx **II 2 D Ex tD A21 IP66 T 80 °/ T 95 °C / T 130 °C**

Technische Daten

| | | |
|---|---|---|
| Bemessungsspannung: ..... | bis | 1100 V für Klemmenkasten ohne Sicherung |
| | bis | 550 V für Klemmenkasten mit Sicherung |
| Bemessungsstrom: ..... | max. | 50 A |
| Anschlussquerschnitt: ..... | max. | 6 mm |
| Umgebungstemperaturbereich:..... | max. | -50 °C bis +75 °C |
| Berührungs-, Fremdkörper- und Wasserschutz: ..... | mind. | IP66 nach EN 60529 |

Bemessungsstrom, Leiterzahl und Leiterquerschnitt sind in den zugehörigen Beiblättern festgelegt.

Die Zusammensetzung des Zündschutzartkurzzeichens richtet sich nach den Zündschutzarten der jeweils verwendeten Komponenten.



EG-Baumusterprüfbescheinigungen ohne Unterschrift und ohne Siegel haben keine Gültigkeit.
Diese EG-Baumusterprüfbescheinigung darf nur unverändert weiterverbreitet werden.
Auszüge oder Änderungen bedürfen der Genehmigung der Physikalisch-Technischen Bundesanstalt.

Physikalisch-Technische Bundesanstalt • Bundesallee 100 • 38116 Braunschweig, Deutschland

# Physikalisch-Technische Bundesanstalt

**Braunschweig und Berlin**

## 2. Ergänzung zur EG-Baumusterprüfbescheinigung PTB 99 ATEX 3103

Die Bemessungswerte sind Höchstwerte, die tatsächlichen elektrischen Werte werden von den eingebauten elektrischen Betriebsmitteln bestimmt. Der Hersteller legt im Rahmen dieser Grenzwerte bei Einhaltung der zutreffenden Normen und abhängig von Netzbedingungen, Betriebsart, Gebrauchskategorie, usw. die endgültigen Bemessungswerte fest.

Hinweise für Herstellung und Betrieb

Die maximale Anzahl der Leiter pro Gehäusegröße in Abhängigkeit vom Querschnitt und dem zulässigen Bemessungsstrom ist den beiliegenden Beiblättern zu entnehmen.

Da das Gehäusematerial einen Oberflächenwiderstand von $10^{13}$ Ohm hat, ist der Hinweis des Herstellers "Nur mit feuchtem Tuch reinigen" zu beachten.

Angewandte Normen

| | | |
|---|---|---|
| **EN 60079-0:2004** | **EN 60079-7:2003** | **EN 60079-11:2007** |
| **EN 60079-18:2004** | **EN 61241-0:2006** | **EN 61241-1:2004** |

Prüfbericht: PTB Ex 07-17090

Zertifizierungsstelle Explosionsschutz
Im Auftrag

Dr.-Ing. U. Klausmeyer
Direktor und Professor

Braunschweig, 26. März 2007



EG-Baumusterprüfbescheinigungen ohne Unterschrift und ohne Siegel haben keine Gültigkeit.
Diese EG-Baumusterprüfbescheinigung darf nur unverändert weiterverbreitet werden.
Auszüge oder Änderungen bedürfen der Genehmigung der Physikalisch-Technischen Bundesanstalt.

Physikalisch-Technische Bundesanstalt • Bundesallee 100 • D-38116 Braunschweig

# BEIBLATT 1

## zur EG-Baumusterprüfbescheinigung PTB 99 ATEX 3103

Bestückung der Abzweigdosen Typ 8118/111 bzw. Typ 8118/113 und der Klemmenkästen Typ 8118/112 bzw. Typ 8118/114

**Maximal zulässiger Dauerstrom der Klemme bzw. maximale Anzahl der Leiter** [1]
in Abhängigkeit vom Leiterquerschnitt und der Anzahl der belasteten Klemmen, für die Temperaturklasse T6 bei $T_a \leq 40$ °C bzw. T5 bei $T_a \leq 55$ °C [4]:

Abzweigdosen Typ 8118/111 bzw. Typ 8118/113 [4]

| Anzahl der belasteten Klemmen | zul. Bemessungsstrom in A bei Leiterquerschnitt | | |
|---|---|---|---|
| | 1,5 mm² | 2,5 mm² | 4 mm² |
| 5 | 13 | 18 | 24 |
| 4 | 15 | 19 | 25 |
| ≤ 3 | 16 | 20 | 25 |

Klemmenkästen Typ 8118/112 bzw. Typ 8118/114 [4]

| Strom in A | Anzahl der Leiter [1] bei Leiterquerschnitt | | | |
|---|---|---|---|---|
| | 1,5 mm² | 2,5 mm² | 4 mm² | |
| 3 | 16 | | | 2) |
| 6 | | 12 | | |
| 10 | | | 12 | 3) |
| 16 | 6 | | | |
| 20 | - | 6 | | |
| 25 | - | - | 8 | |
| | 8 | 6 | 6 | |
| | **max. Klemmenanzahl** in Abhängigkeit vom Querschnitt bzw. max. zul. Leiterquerschnitt der eingebauten Klemmen | | | |

Anmerkungen

1) Als Leiter zählt jeder eingeführte Leiter und jeder interne Verbindungsleiter. Brücken, Schutzleiter und Sicherungen werden nicht gezählt.

2) beliebig zusätzlich

3) Bei der Anwendung dieser Tabellenwerte dürfen Gleichzeitigkeitsfaktoren oder Belastungsfaktoren entsprechend IEC 439 berücksichtigt werden.
Mischbestückung mit Stromkreisen unterschiedlicher Querschnitte und Ströme ist möglich durch anteilige Ausnutzung der verschiedenen Tabellenwerte:

| Beispiel: | Querschnitt / mm² | Strom / A | Leiteranzahl | Auslastung |
|---|---|---|---|---|
| (allgemein) | 1,5 | 10 | 10 (von 16) | = 63 % |
| | 2,5 | 16 | 4 (von 12) | = 33 % |
| | | | Summe | = 96 % < 100 % |

4) Bei Einbau von Sicherungen ≤ 2 A ..... Temperaturklasse „T6"
Bei Einbau von Sicherungen > 2 A bis ≤ 5A... Temperaturklasse „T5"
Bei Einbau von Sicherungen ≤ 6,3 A..... Temperaturklasse „T4"

PTB Ex 01 - 11021

PHYSIKALISCH-TECHNISCHE BUNDESANSTALT 24

3. 8. 00

R. STAHL SCHALTGERÄTE GMBH
Bergstraße 2
D 74653 Künzelsau

i.V. i.V.

DIN ISO 9001
REG.NR. 1146-01



TÜV 3/97

# BEIBLATT 2

STAHL

## zur EG-Baumusterprüfbescheinigung PTB 99 ATEX 3103

Bestückung der Abzweigdosen Typ 8118/121 bzw. Typ 8118/123 und der Klemmenkästen Typ 8118/122 bzw. Typ 8118/124

**Maximal zulässiger Dauerstrom der Klemme bzw. maximale Anzahl der Leiter** [1]
in Abhängigkeit vom Leiterquerschnitt und der Anzahl der belasteten Klemmen, für die Temperaturklasse T6 bei $T_a \leq 40$ °C bzw. T5 bei $T_a \leq 55$ °C [4]:

Abzweigdosen Typ 8118/121 bzw. Typ 8118/123 [4]

| Anzahl der belasteten Klemmen | zul. Bemessungsstrom in A bei Leiterquerschnitt | | | |
|---|---|---|---|---|
| | 1,5 mm² | 2,5 mm² | 4 mm² | 6 mm² |
| 7 | 13 | 17 | 24 | 32 |
| 6 | 14 | 18 | 25 | 33 |
| 5 | | 20 | | 35 |
| ≤ 4 | 16 | | | |

PTB Ex 01 - 11021

Klemmenkästen Typ 8118/122 bzw. Typ 8118/124 [4]

| Strom in A | Anzahl der Leiter [1] bei Leiterquerschnitt | | | | |
|---|---|---|---|---|---|
| | 1,5 mm² | 2,5 mm² | 4 mm² | 6 mm² | |
| 3 | 26 | | | | 2) |
| 6 | | | | | |
| 10 | | 26 | | | |
| 16 | 6 | 14 | 22 | 20 | 3) |
| 20 | - | 6 | | | |
| 25 | - | - | 8 | | |
| 35 | - | - | - | 4 | |
| | 13 | 13 | 11 | 10 | |
| | **max. Klemmenanzahl** in Abhängigkeit vom Querschnitt bzw. max. zul. Leiterquerschnitt der eingebauten Klemmen | | | | |

PHYSIKALISCH-TECHNISCHE BUNDESANSTALT 24

3. 8. 00
R. STAHL SCHALTGERÄTE GMBH
Bergstraße 2
D 74653 Künzelsau
i.V. i.V.

Anmerkungen

1) Als Leiter zählt jeder eingeführte Leiter und jeder interne Verbindungsleiter. Brücken, Schutzleiter und Sicherungen werden nicht gezählt.

2) beliebig zusätzlich

3) Bei der Anwendung dieser Tabellenwerte dürfen Gleichzeitigkeitsfaktoren oder Belastungsfaktoren entsprechend IEC 439 berücksichtigt werden. Mischbestückung mit Stromkreisen unterschiedlicher Querschnitte und Ströme ist möglich durch anteilige Ausnutzung der verschiedenen Tabellenwerte:

| Beispiel: | Querschnitt / mm² | Strom / A | Leiteranzahl | Auslastung |
|---|---|---|---|---|
| (allgemein) | 1,5 | 10 | 5 (von 26) | = 19 % |
| | 2,5 | 16 | 6 (von 14) | = 43 % |
| | 4,0 | 20 | 8 (von 22) | = 37 % |
| | | | Summe | = 99 % < 100 % |

4) Bei Einbau von Sicherungen ≤ 2 A ..... Temperaturklasse „T6"
Bei Einbau von Sicherungen > 2 A bis ≤ 5A... Temperaturklasse „T5"
Bei Einbau von Sicherungen ≤ 6,3 A..... Temperaturklasse „T4"

DIN ISO 9001
REG.NR. 1146-01



TXV 3/97 Papier erhältlich

# BEIBLATT 3

## zur EG-Baumusterprüfbescheinigung PTB 99 ATEX 3103

Bestückung der Abzweigdosen Typ 8118/131 bzw. Typ 8118/133 und der Klemmenkästen Typ 8118/132 bzw. Typ 8118/134

**Maximal zulässiger Dauerstrom der Klemme bzw. maximale Anzahl der Leiter** [1]
in Abhängigkeit vom Leiterquerschnitt und der Anzahl der belasteten Klemmen, für die Temperaturklasse T6 bei $T_a \leq 40$ °C bzw. T5 bei $T_a \leq 55$ °C [4]:

Abzweigdosen Typ 8118/131 bzw. Typ 8118/133 [4]

| Anzahl der belasteten Klemmen | zul. Bemessungsstrom in A bei Leiterquerschnitt | | | | |
|---|---|---|---|---|---|
| | 1,5 mm² | 2,5 mm² | 4 mm² | 6 mm² | 10 mm² |
| 7 | 13 | 17 | 24 | 32 | 44 |
| 6 | 14 | 18 | 25 | 33 | 46 |
| 5 | | | | | 49 |
| ≤ 4 | 16 | 20 | | 35 | 50 |

Klemmenkästen Typ 8118/132 bzw. Typ 8118/134 [4]

| Strom in A | Anzahl der Leiter [1] bei Leiterquerschnitt | | | | | |
|---|---|---|---|---|---|---|
| | 1,5 mm² | 2,5 mm² | 4 mm² | 6 mm² | 10 mm² | |
| 3 | 36 | | | | | 2) |
| 6 | | | | | | |
| 10 | 26 | 36 | | | | |
| 16 | 6 | 18 | 32 | 24 | | |
| 20 | - | 6 | 22 | | 20 | 3) |
| 25 | - | - | 8 | | | |
| 35 | - | - | - | 6 | | |
| 50 | - | - | - | - | 4 | |
| | 18 | 18 | 16 | 12 | 10 | |
| | **max. Klemmenanzahl** in Abhängigkeit vom Querschnitt bzw. max. zul. Leiterquerschnitt der eingebauten Klemmen | | | | | |

Anmerkungen

1) Als Leiter zählt jeder eingeführte Leiter und jeder interne Verbindungsleiter. Brücken, Schutzleiter und Sicherungen werden nicht gezählt.

2) beliebig zusätzlich

3) Bei der Anwendung dieser Tabellenwerte dürfen Gleichzeitigkeitsfaktoren oder Belastungsfaktoren entsprechend IEC 439 berücksichtigt werden. Mischbestückung mit Stromkreisen unterschiedlicher Querschnitte und Ströme ist möglich durch anteilige Ausnutzung der verschiedenen Tabellenwerte:

| Beispiel: (allgemein) | Querschnitt / mm² | Strom / A | Leiteranzahl | Auslastung |
|---|---|---|---|---|
| | 1,5 | 10 | 2 (von 26) | = 8 % |
| | 2,5 | 16 | 10 (von 18) | = 55 % |
| | 4,0 | 20 | 8 (von 27) | = 30 % |
| | | | Summe | = 93 % < 100 % |

4) Bei Einbau von Sicherungen ≤ 2 A ..... Temperaturklasse „T6"
Bei Einbau von Sicherungen > 2 A bis ≤ 5A... Temperaturklasse „T5"
Bei Einbau von Sicherungen ≤ 6,3 A..... Temperaturklasse „T4"

3. 8. 00
R. STAHL SCHALTGERÄTE GMBH
Bergstraße 2
D 74653 Künzelsau

i.V. i.V.

PTB Ex 01 - 11021

DIN ISO 9001
REG.NR. 1146-01

PHYSIKALISCH-TECHNISCHE BUNDESANSTALT 24

U:\ABTL\SGZ\WORD\8118\8118kl_1_mit_Sicherung.doc - 3. August 2000

TÜV 3/97

# Physikalisch-Technische Bundesanstalt

**Braunschweig and Berlin**

(1) # EC-TYPE-EXAMINATION CERTIFICATE

(2) Equipment and Protective Systems Intended for Use in Potentially Explosive Atmospheres - **Directive 94/9/EC**

(3) EC Type Examination Certificate Number

**PTB 99 ATEX 3103**

(4) Equipment: Junction and Terminal Boxes Type 8118/...-...

(5) Manufacturer: R. Stahl Schaltgeräte GmbH

(6) Address: Bergstraße 2, D-74653 Künzelsau

(7) This equipment and any acceptable variation thereto are specified in the schedule to this certificate.

(8) The Physikalisch-Technische Bundesanstalt, notified body No. 0102 in accordance with Article 9 of the Council Directive 94/9/EC of 23 March 1994, certifies that this equipment has been found to comply with the Essential Health and Safety Requirements relating to the design and construction of equipment and protective systems intended for use in potentially explosive atmospheres, given in Annex II to the Directive.

The examination and test results are recorded in the confidential report PTB Ex 99-30041.

(9) Compliance with the Essential Health and Safety Requirements has been assured by compliance with:

**EN 50 014:1997 EN 50 019:1994 EN 50 020:1994**

(10) If "X" is placed after the certificate number, it indicates that the equipment is subject to special conditions for safe use specified in the schedule to this certificate.

(11) This EC-type-examination Certificate relates only to the design and construction of the specified equipment in accordance with Directive 94/9/EC. Further requirements of this Directive apply to the manufacture and supply of this equipment.

(12) The marking of the equipment shall include the following:

**II 2 G EEx e II T6/T5 or EEx ia/ib IIA/IIB/IIC T6/T5**

Zertifizierungsstelle Explosionsschutz
By order:

Braunschweig, 19 April 1999

*signed: U. Engel* *L.S.*

Dr.-Ing. U. Engel
Regierungsdirektor



EC-type-examination Certificates without signature and official stamp shall not be valid. The certificates may be circulated only without alteration. Extracts or alterations are subject to approval by the Physikalisch-Technische Bundesanstalt.
In case of dispute, the German text shall prevail.

Physikalisch-Technische Bundesanstalt • Bundesallee 100 • D-38116 Braunschweig

# Physikalisch-Technische Bundesanstalt

**Braunschweig and Berlin**

(13) # S C H E D U L E

(14) ## EC-Type Examination Certificate PTB 99 ATEX 3103

(15) Description of the equipment

Junction and terminal boxes of polyester resin with a surface resistance ≥ 1 GΩ, Type series 8118/...-..., for fixed installation, with built-in - separately certified - line-up or hood-type terminals for non-intrinsically safe or - separately certified - intrinsically safe circuits.

Marking of explosion protection

Fitting with terminals

| | |
|---|---|
| - only for non-intrinsically safe circuits | EEx e II T6 or T5 for $T_{amb} \leq + 55$ °C |
| - only for intrinsically safe circuits | EEx ia/ib IIC/IIB /IIA T6 |
| - only for intrinsically safe circuits | EEx ia/ib IIC/IIB /IIA T5 for $T_{amb} \leq +55$ °C |

Technical data

| | |
|---|---|
| Rated voltage: | max. 1100 V (depending on the operating voltage range of the terminals used) |

Rated current, number of conductors and conductor cross section are determined in the associated additional sheets.

| | |
|---|---|
| Ambient temperature range, max.: | -50 °C ≤ T ≤ +55 °C |
| Contact, foreign particles and water protection | min. IP 54 to EN 60 529: 1991 |

Note

The degree of protection - at least IP 54 - is achieved only when the tested gaskets, cable glands and stopping plugs are used properly.
Instruction of the manufacturer "Clean only with wet cloth" is to be followed.
The suitability for low ambient temperatures is visible by special marking. Only such separately certified sealing gaskets and built-in and built-on components, which are suitable for these temperatures, are used. Additional instructions of the manufacturer are to be followed.

(16) Test report PTB Ex 99-30041 (consisting of 6 pages, description and 2 drawings)

(17) Special requirements not applicable

(18) Essential health and safety requirements covered by standards

Zertifizierungsstelle Explosionsschutz Braunschweig, 19 April 1999
By order:

*signed: U. Engel* *L.S.*
Dr.-Ing. U. Engel
Regierungsdirektor



EC-type-examination Certificates without signature and official stamp shall not be valid. The certificates may be circulated only without alteration. Extracts or alterations are subject to approval by the Physikalisch-Technische Bundesanstalt.
In case of dispute, the German text shall prevail.

Physikalisch-Technische Bundesanstalt • Bundesallee 100 • D-38116 Braunschweig

# Physikalisch-Technische Bundesanstalt

**Braunschweig und Berlin**

## 1st SUPPLEMENT

**according to Directive 94/9/EC Annex III.6**

## to EC-TYPE-EXAMINATION CERTIFICATE PTB 99 ATEX 3103

## (Translation)

Equipment: Branching boxes or terminal boxes, type 8118/...-...

Marking: **II 2 G EEx e II T6/T5 or EEx ia/ib IIA/IIB/IIC T6/T5**

Manufacturer: R. STAHL Schaltgeräte GmbH

Address: Am Bahnhof 30
74638 Waldenburg (Württ.)

Description of supplements and modifications

The branching boxes or terminal boxes of type 8118/...-... can be used to house fuses designed to type of protection Encapsulation "m", which are covered by a separate certificate.

The enclosure may in addition be made from an alternative polyester resin.

The marking is extended to read

**II 2 G EEx em II T6/T5/T4 or EEx ia/ib IIA/IIB/IIC T6/T5**

Technical data

| | | |
|---|---|---|
| Rated voltage: ..... | up to | 1100 V for terminal box without fuse |
| | up to | 550 V for terminal box with fuse |
| Rated current: ..... | max. | 50 A |
| Conductor cross section: ..... | max. | 6 mm |
| Ambient temperatures:..... | max. | -50 °C to +55 °C |

Current rating, number of conductors and conductor size are defined in the relevant specification sheets.

The composition of the protection symbol will be based on the types of protection of components actually used.

The ratings represent maximum values, actual values will be subject to the electrical equipment used from case to case. Depending on the system conditions, the mode of operation, the utilization category, etc., the manufacturer will specify the definitive ratings which will be within the range of these limiting values and will comply with the relevant standards.



EC-type-examination Certificates without signature and official stamp shall not be valid. The certificates may be circulated only without alteration. Extracts or alterations are subject to approval by the Physikalisch-Technische Bundesanstalt.
In case of dispute, the German text shall prevail.

Physikalisch-Technische Bundesanstalt • Bundesallee 100 • D-38116 Braunschweig

# Physikalisch-Technische Bundesanstalt

**Braunschweig und Berlin**

## 1st SUPPLEMENT TO EC-TYPE-EXAMINATION CERTIFICATE PTB 99 ATEX 3103

Notes for installation and use

The maximum number of conductors that can be used for each enclosure size is subject to the cross section and the admissible current rating and is shown in the attached specification sheets.

The surface resistance of the material used for the enclosure is $10^{13}$ ohms. Due regard shall, therefore, be given to the note "to be cleaned with moist cloth only".

Test report: PTB Ex Ex 01-11021

Zertifizierungsstelle Explosionsschutz
By order:

Braunschweig, March 22, 2001

Dr.-Ing. U. Klausmeyer
Regierungsdirektor



EC-type-examination Certificates without signature and official stamp shall not be valid. The certificates may be circulated only without alteration. Extracts or alterations are subject to approval by the Physikalisch-Technische Bundesanstalt.
In case of dispute, the German text shall prevail.

Physikalisch-Technische Bundesanstalt • Bundesallee 100 • D-38116 Braunschweig

# Physikalisch-Technische Bundesanstalt

**Braunschweig und Berlin**

## 2nd SUPPLEMENT

**according to Directive 94/9/EC Annex III.6**

## to EC-TYPE-EXAMINATION CERTIFICATE PTB 99 ATEX 3103

## (Translation)

Equipment: Branching / terminal boxes, type 8118/...-...

Marking: ⟨Ex⟩ **II 2 G EEx em II T6/T5/T4 and EEx ia/ib IIA/IIB/IIC, T6/T5**

Manufacturer: R. STAHL Schaltgeräte GmbH

Address: Am Bahnhof 30, 74638 Waldenburg (Württ.), Germany

Description of supplements and modifications

The branching / terminal boxes, type 8118/...-..., with plastic enclosure, may also be employed in areas in which a potentially explosive atmosphere as a mixture of dust and air can occasionally form.

The maximum ambient temperature is increased to +75 °C.

The branching / terminal boxes have been re-inspected on the basis of Standards EN 60079-0, EN 60079-7, EN 60079-11, EN 60079-18, EN 61241-0 and EN 61241-1.

The marking will thus change to:

⟨Ex⟩ **II 2 G Ex em II T6/T5/T4 and Ex ia/ib IIA/IIB/IIC T6/T5**

⟨Ex⟩ **II 2 D Ex tD A21 IP66 T 80 °/ T 95 °C / T 130 °C**

Technical data

| | | |
|---|---|---|
| Rated voltage: ..... | up to | 1100 V for terminal boxes without fuse |
| | up to | 550 V for terminal boxes with fuse |
| Rated current: ..... | max. | 50 A |
| Conductor size: ..... | max. | 6 mm |
| Ambient temperature range: ..... | max. | -50 °C to +75 °C |

Protection against contact, foreign bodies and water: ..... IP66 in accordance with EN 60529 as a minimum

Rated current, number of conductors and conductor size are specified in the corresponding companion sheets.

The composition of the protection symbol is based on the types of protection of the components actually used.



EC-type-examination Certificates without signature and official stamp shall not be valid. The certificates may be circulated only without alteration. Extracts or alterations are subject to approval by the Physikalisch-Technische Bundesanstalt.
In case of dispute, the German text shall prevail.

Physikalisch-Technische Bundesanstalt • Bundesallee 100 • 38116 Braunschweig, Germany

# Physikalisch-Technische Bundesanstalt

**Braunschweig und Berlin**

**2nd SUPPLEMENT TO EC-TYPE-EXAMINATION CERTIFICATE PTB 99 ATEX 3103**

Rated values are maximum values, the actual electrical values are determined by mounted electrical apparatus. Within these limiting values complying with the appropriate standards the manufacturer specifies the final limiting values dependent on power supply specifications, operating mode, utilization category, etc.

Notes for manufacturing and operation

For the maximum number of conductors for each enclosure size, which is subject to the cross section and the permissible continuous current, reference is made to the attached companion sheets.

Since the surface resistance of the material used for the enclosure is $10^{13}$ ohm, due regard must be given to the warning "Only use moist cloth for cleaning!" provided by the manufacturer.

Applied standards

| | | |
|---|---|---|
| **EN 60079-0:2004** | **EN 60079-7:2003** | **EN 60079-11:2007** |
| **EN 60079-18:2004** | **EN 61241-0:2006** | **EN 61241-1:2004** |

Test report: PTB Ex 07-17090

Zertifizierungsstelle Explosionsschutz
By order:

Braunschweig, March 26, 2007

Dr.-Ing. U. Klausmeier
Direktor und Professor



EC-type-examination Certificates without signature and official stamp shall not be valid. The certificates may be circulated only without alteration. Extracts or alterations are subject to approval by the Physikalisch-Technische Bundesanstalt.
In case of dispute, the German text shall prevail.

Physikalisch-Technische Bundesanstalt • Bundesallee 100 • 38116 Braunschweig, Germany

UNCERTIFIED TRANSLATION

# Supplementary Sheet 1

## to EC-Type Examination Certificate PTB 99 ATEX 3103

Fitting of the junction boxes Type 8118/111 or Type 8118/113 and terminal boxes Type 8118/112 or Type 8118/114

**Maximum permissible continuous current of the terminal or maximum number of conductors** [1] depending on the conductor size and the number of loaded terminals, for the temperature class T6 at $T_a \leq 40$ °C or T5 at $T_a \leq 55$ °C [4]:

junction boxes Type 8118/111 or Type 8118/114 [4]

| number of loaded terminals | permissible rated current in A at conductor size | | |
|---|---|---|---|
| | 1,5 mm² | 2,5 mm² | 4 mm² |
| 5 | 13 | 18 | 24 |
| 4 | 15 | 19 | 25 |
| ≤ 3 | 16 | 20 | 25 |

terminal boxes Type 8118/112 or Type 8118/114 [4]

| current in A | number of conductors [1] at conductor size | | | |
|---|---|---|---|---|
| | 1,5 mm² | 2,5 mm² | 4 mm² | |
| 3 | 16 | | | 2) |
| 6 | | 12 | | |
| 10 | | | 12 | 3) |
| 16 | 6 | | | |
| 20 | - | 6 | | |
| 25 | - | - | 8 | |
| | 8 | 6 | 6 | |
| | **max. number of terminals** depending on the cross section or the max. permissible conductor size of the terminals installed | | | |

Note

1) Every entered conductor and every internal connection wire counts as conductor. Bridges and earth conductors are not counted.

2) additional conductors optional

3) When applying these tabular values, simultaneity factors or load factors according to IEC 439 may be considered.
Mixed equipment with circuits with different cross sections and currents is possible by proportional utilization of the different tabular values:

| example: | cross section / mm² | current / A | number of conductors | utilization |
|---|---|---|---|---|
| (generally) | 1,5 | 10 | 10 (of 16) | = 63 % |
| | 2,5 | 16 | 4 (of 12) | = 33 % |
| | | | total | = 96 % < 100 % |

4) When mounting fuses ≤ 2 A ..... temperature class „T6“
When mounting fuses > 2 A bis ≤ 5A ..... temperature class „T5“
When mounting fuses ≤ 6,3 A ..... temperature class „T4“

UNCERTIFIED TRANSLATION

# Supplementary Sheet 2

## to EC-Type Examination Certificate PTB 99 ATEX 3103

Fitting of the junction boxes Type 8118/121 or Type 8118/123 and terminal boxes Type 8118/122 or Type 8118/124

**Maximum permissible continuous current of the terminal or maximum number of conductors** [1] depending on the conductor size and the number of loaded terminals, for the temperature class T6 at $T_a \leq 40$ °C or T5 at $T_a \leq 55$ °C [4].

junction boxes Type 8118/121 or Type 8118/123 [4]

| number of loaded terminals | permissible rated current in A at conductor size | | | |
|---|---|---|---|---|
| | 1,5 mm² | 2,5 mm² | 4 mm² | 6 mm² |
| 7 | 13 | 17 | 24 | 32 |
| 6 | 14 | 18 | 25 | 33 |
| 5 | | | | |
| ≤ 4 | 16 | 20 | | 35 |

terminal boxes type 8118/122 or Type 8118/124 [4]

| current in A | number of conductors [1] at conductor size | | | | |
|---|---|---|---|---|---|
| | 1,5 mm² | 2,5 mm² | 4 mm² | 6 mm² | |
| 3 | 26 | | | | 2) |
| 6 | | | | | |
| 10 | | 26 | 22 | | |
| 16 | 6 | 14 | | 20 | 3) |
| 20 | - | 6 | | | |
| 25 | - | - | 8 | | |
| 35 | - | - | - | 4 | |
| | 13 | 13 | 11 | 10 | |
| | **max. number of terminals** depending on the cross section or the max. permissible conductor size of the terminals installed | | | | |

Note

1) Every entered conductor and every internal connection wire counts as conductor. Bridges and earth conductors are not counted.

2) additional conductors optional

3) When applying these tabular values, simultaneity factors or load factors according to IEC 439 may be considered.
Mixed equipment with circuits with different cross sections and currents is possible by proportional utilization of the different tabular values:

| example: | cross section / mm² | current / A | number of conductors | utilization |
|---|---|---|---|---|
| (generally) | 1,5 | 10 | 10 (of 16) | = 63 % |
| | 2,5 | 16 | 4 (of 12) | = 33 % |
| | | | total | = 96 % < 100 % |

4) When mounting fuses ≤ 2 A ..... temperature class „T6“
When mounting fuses > 2 A bis ≤ 5A ..... temperature class „T5“
When mounting fuses ≤ 6,3 A ..... temperature class „T4“

UNCERTIFIED TRANSLATION

# Supplementary Sheet 3

## to EC-Type Examination Certificate PTB 99 ATEX 3103

Fitting of the junction boxes Type 8118/131 or Type 8118/133 and terminal boxes Type 8118/132 or Type 8118/134

**Maximum permissible continuous current of the terminal or maximum number of conductors** [1] depending on the conductor size and the number of loaded terminals, for the temperature class T6 at $T_a \leq 40$ °C or T5 at $T_a \leq 55$ °C [4]:

junction boxes Type 8118/131 or Type 8118/133 [4]

| number of loaded terminals | permissible rated current in A at conductor size | | | | |
|---|---|---|---|---|---|
| | 1,5 mm² | 2,5 mm² | 4 mm² | 6 mm² | 10 mm² |
| 7 | 13 | 17 | 24 | 32 | 44 |
| 6 | 14 | 18 | 25 | 33 | 46 |
| 5 | | | | | 49 |
| ≤ 4 | 16 | 20 | | 35 | 50 |

terminal boxes Type 8118/132 or Type 8118/134 [4]

| current in A | number of conductors [1] at conductor size | | | | | |
|---|---|---|---|---|---|---|
| | 1,5 mm² | 2,5 mm² | 4 mm² | 6 mm² | 10 mm² | |
| 3 | | | | | | 2) |
| 6 | 36 | | | | | |
| 10 | 26 | 36 | | | | |
| 16 | 6 | 18 | 32 | | | |
| 20 | - | 6 | 22 | 24 | | 3) |
| 25 | - | - | 8 | | 20 | |
| 35 | - | - | - | 6 | | |
| 50 | - | - | - | - | 4 | |
| | 18 | 18 | 16 | 12 | 10 | |
| | **max. number of terminals** depending on the cross section or the max. permissible conductor size of the terminals installed | | | | | |

Note

1) Every entered conductor and every internal connection wire counts as conductor. Bridges and earth conductors are not counted.

2) additional conductors optional

3) When applying these tabular values, simultaneity factors or load factors according to IEC 439 may be considered.
Mixed equipment with circuits with different cross sections and currents is possible by proportional utilization of the different tabular values:

| example: | cross section / mm² | current / A | number of conductors | utilization |
|---|---|---|---|---|
| (generally) | 1,5 | 10 | 10 (of 16) | = 63 % |
| | 2,5 | 16 | 4 (of 12) | = 33 % |
| | | | total | = 96 % < 100 % |

4) When mounting fuses ≤ 2 A ..... temperature class „T6“
When mounting fuses > 2 A bis ≤ 5A ..... temperature class „T5“
When mounting fuses ≤ 6,3 A ..... temperature class „T4“

Doc No: 16410-2

# EG-Konformitätserklärung
# EC-Declaration of Conformity
# Déclaration de Conformité CE

**Wir**; *we; nous*

R. STAHL Schaltgeräte GmbH, Am Bahnhof 30, 74638 Waldenburg, Germany

**8118**

**erklären in alleiniger Verantwortung, dass das Produkt**
*hereby declare in our sole responsibility, that the product*
*déclarons, sous notre seule responsabilité, que le produit*

**Abzweigdose und Klemmenkasten**
*Junction box and terminal box*
*Boîte de dérivation et de raccordement*

**mit der** **EG-Baumusterprüfbescheinigung:**
*under* *EC-Type Examination Certificate:*
*avec* *Attestation d'examen CE de type:*

**PTB 99 ATEX 3103**
**(Physikalisch-Technische Bundesanstalt**
**Bundesallee 100, 38116 Braunschweig)**

**auf das sich diese Erklärung bezieht, mit den folgenden Normen oder normativen Dokumenten übereinstimmt**
*which is the subject of this declaration, is in conformity with the following standards or normative documents*
*auquel cette déclaration se rapporte, est conforme aux normes ou aux documents normatifs suivants*

| **Bestimmungen der Richtlinie**<br>*Terms of the directive*<br>*Prescription de la directive* | **Nummer sowie Ausgabedatum der Norm**<br>*Number and date of issue of the standard*<br>*Numéro ainsi que date d'émission de la norme* |
|---|---|
| **94/9/EG:** **ATEX-Richtlinie**<br>*94/9/EC:* *ATEX Directive*<br>*94/9/CE:* *Directive ATEX* | EN 60079-0: 2006<br>EN 60079-7: 2007<br>EN 60079-11: 2007<br>EN 60079-18: 2004<br>EN 61241-0: 2006<br>EN 61241-1: 2004 |
| **2004/108/EG:** **EMV-Richtlinie**<br>*2004/108/EC:* *EMC Directive*<br>*2004/108/CE:* *Directive CEM* | |

Waldenburg, 20. Sept. 2010

**Ort und Datum**
*Place and date*
*Lieu et date*

i.V.

**J.-P. Rückgauer**
**Leiter Entwicklung und Technik**
*Director Design and Technology*
*Directeur Développement et Technique*

i.V.

**Dr. S. Jung**
**Leiter Qualitätsmanagement**
*Director Quality Management Dept.*
*Directeur Dép. Assurance de Qualité*

# (1) EG-Baumusterprüfbescheinigung

(2) Geräte und Schutzsysteme zur bestimmungsgemäßen Verwendung in explosionsgefährdeten Bereichen - **Richtlinie 94/9/EG**

(3) **TÜV 99 ATEX 1471**

(4) Gerät: Impulsauswertegerät Typ KF**-UF*-Ex*.*

(5) Hersteller: Pepperl + Fuchs GmbH

(6) Anschrift: D-68307 Mannheim
Königsberger Allee 87

(7) Die Bauart dieses Gerätes sowie die verschiedenen zulässigen Ausführungen sind in der Anlage zu dieser Baumusterprüfbescheinigung festgelegt.

(8) Der TÜV Hannover/Sachsen-Anhalt e.V., TÜV CERT-Zertifizierungsstelle, bescheinigt als benannte Stelle Nr. 0032 nach Artikel 9 der Richtlinie des Rates der Europäischen Gemeinschaften vom 23. März 1994 (94/9/EG) die Erfüllung der grundlegenden Sicherheits- und Gesundheitsanforderungen für die Konzeption und den Bau von Geräten und Schutzsystemen zur bestimmungsgemäßen Verwendung in explosionsgefährdeten Bereichen gemäß Anhang II der Richtlinie.

Die Ergebnisse der Prüfung sind in dem vertraulichen Prüfbericht Nr. 99/PX19690 festgelegt.

(9) Die grundlegenden Sicherheits- und Gesundheitsanforderungen werden erfüllt durch Übereinstimmung mit

**EN 50 014:1997** **EN 50 020:1994**

(10) Falls das Zeichen "X" hinter der Bescheinigungsnummer steht, wird auf besondere Bedingungen für die sichere Anwendung des Gerätes in der Anlage zu dieser Bescheinigung hingewiesen.

(11) Diese EG-Baumusterprüfbescheinigung bezieht sich nur auf die Konzeption und den Bau des festgelegten Gerätes gemäß Richtlinie 94/9/EG. Weitere Anforderungen dieser Richtlinie gelten für die Herstellung und das Inverkehrbringen dieses Gerätes.

(12) Die Kennzeichnung des Gerätes muß die folgenden Angaben enthalten:

**II (1) G D [EEx ia] IIC**

**TÜV Hannover/Sachsen-Anhalt e.V.**
**TÜV CERT-Zertifizierungsstelle**
**Am TÜV 1**
**D-30519 Hannover**

**Hannover, 08.11.1999**

**Der Leiter**

AP/CERTNORD 10.98

**Diese EG-Baumusterprüfbescheinigung darf nur unverändert weiterverbreitet werden.**
**Auszüge oder Änderungen bedürfen der Genehmigung des TÜV Hannover/Sachsen-Anhalt e.V.**

(13) **ANLAGE**

## (14) EG-Baumusterprüfbescheinigung Nr. TÜV 99 ATEX 1471

(15) Beschreibung des Gerätes

Das Impulsauswertegerät Typ KF**-UF*-Ex*.* dient zur Impulsauswertung angeschlossener Geber, die sich innerhalb des explosionsgefährdeten Bereiches befinden dürfen. Das Impulsauswertegerät muß außerhalb des explosionsgefährdeten Bereiches errichtet werden. Die höchstzulässige Umgebungstemperatur beträgt 60°C.

Elektrische Daten

| | | |
|---|---|---|
| Versorgungsstromkreis (Klemmen 23, 24) oder über Power Rail | Nennspannungen:<br>U = 20 V .. 90 V DC<br>U = 48 V .. 253 V AC<br>U = 20 V .. 30 V DC, | $U_m$ = 125 DC oder<br>$U_m$ = 253 V AC<br>$U_m$ = 40 V DC |
| Stromausgang (Klemmen 7, 8) | I = 0/4 .. 20 mA, $R_{max}$ = 650 Ω, | $U_m$ = 40 V |
| Kontaktstromkreise (Klemmen 10, 11, 12 und 16, 17, 18) | Wechselspannung<br>U = 253 V<br>I = 2 A<br>P = 506 W | Gleichspannung<br>U = 40 V<br>I = 2 A<br>P = 80 W |
| Schaltausgang (Klemmen 19, 20, 21) | U = 40 V, I = 50 mA | $U_m$ = 40 V |
| Anlaufüberbrückung (Klemmen 13, 14, 15) | passiv | $U_m$ = 40 V |
| Schnittstelle RS232 (Klinkenbuchse) | | $U_m$ = 40 V |
| Eingangsstromkreise (Klemmen 1, 3 bzw. 4, 6) | in Zündschutzart Eigensicherheit EEx ia IIC/IIB/IIA<br>Höchstwerte<br>je Eingang:<br>$U_o$ = 10,1 V<br>$I_o$ = 13 mA<br>$P_o$ = 34 mW<br>$R_i$ = 758 Ω<br>Kennlinie: linear<br>Die wirksame innere Induktivität und Kapazität ist vernachlässigbar klein. | bzw. Parallelschaltung<br>$U_o$ = 10,1 V<br>$I_o$ = 26 mA<br>$P_o$ = 68 mW<br>$R_i$ = 379 Ω |

| | je Eingang | | |
|---|---|---|---|
| | EEx ia IIA | EEx ia IIB | EEx ia IIC |
| $L_o$ | 1 H | 730 mH | 195 mH |
| $C_o$ | 93 µF | 19,4 µF | 2,8 µF |

| | Eingänge parallel | | |
|---|---|---|---|
| | EEx ia IIA | EEx ia IIB | EEx ia IIC |
| $L_o$ | 350 mH | 170 mH | 46 mH |
| $C_o$ | 93 µ | 19,4 µF | 2,8 µF |

Die vorgenannten Höchstwerte der äußeren Reaktanzen gelten nur, sowie das gleichzeitige Auftreten der äußeren Induktivität und Kapazität nicht betrachtet werden muß (z.B. bei Leitungen).

Beim gleichzeitigen Auftreten von Kapazität und Induktivität in konzentrierter Form sind die höchstzulässigen Werte der folgenden Tabelle zu entnehmen:

| | je Eingang | | |
|---|---|---|---|
| | EEx ia IIA | EEx ia IIB | EEx ia IIC |
| $L_o$ | 20 mH | 10 mH | 5 mH |
| $C_o$ | 3,0 µF | 1,5 µF | 0,5 µF |

| | Eingänge parallel | | |
|---|---|---|---|
| | EEx ia IIA | EEx ia IIB | EEx ia IIC |
| $L_o$ | 20 mH | 10 mH | 5 mH |
| $C_o$ | 3,0 µF | 1,5 µF | 0,5 µF |

Die Eingangsstromkreise sind von allen übrigen Stromkreisen bis zu einem Scheitelwert der Nennspannung von 375 V sicher galvanisch getrennt.

(16) Prüfungsunterlagen sind im Prüfbericht Nr.: 99/PX19690 aufgelistet.

(17) Besondere Bedingung

keine

(18) Grundlegende Sicherheits- und Gesundheitsanforderungen

keine zusätzlichen

**Translation**

(1) # EC-TYPE EXAMINATION CERTIFICATE

(2) Equipment or Protective System intended for use in potentially explosive atmospheres - **Directive 94/9/EC**

(3) EC-Type Examination Certificate Number

## TÜV 99 ATEX 1471

(4) Equipment or Protective System: Impulse Evaluating Device Type KF**-UF*-Ex*.*

(5) Manufacturer: Pepperl + Fuchs GmbH

(6) Address: Königsberger Allee 87

D – 68307 Mannheim

(7) This equipment or protective system and any acceptable variation thereto is specified in the schedule to this certificate and the documents therein referred to.

(8) The TÜV Hannover/Sachsen-Anhalt e.V., TÜV Certification Body N° 0032 in accordance with Article 9 of the Council Directive 94/9/EC of March 23, 1994, certifies that this equipment or protective system has been found to comply with the Essential Health and Safety Requirements relating to the design and construction of equipment and protective systems intended for use in potentially explosive atmospheres given in Annex II to the Directive.

The examination and test results are recorded in confidential report N° 99/PX19690.

(9) Compliance with the Essential Health and Safety Requirements has been assured by compliance with:

**EN 50 014:1997** **EN 50 020:1994**

(10) If the sign "X" is placed after the certification number, it indicates that the equipment or protective system is subject to special conditions for safe use specified in the schedule to this certificate.

(11) This EC-TYPE EXAMINATION CERTIFICATE relates only to the design and construction of the specified equipment or protective system. If applicable, further requirements of this Directive apply to the manufacture and supply of this equipment or protective system.

(12) The marking of the equipment or protective system shall include the following:

**II (1) G D [EEx ia] IIC**

**TÜV Hannover/Sachsen-Anhalt e.V.**
**TÜV CERT-Zertifizierungsstelle**
**Am TÜV 1**
**D-30519 Hannover**

**Hannover, 1999-11-08**

**Head of the Certification Body**

AP/CERTNORD 10.98

**This certificate may only be reproduced without any change, schedule included. Excerpts or changes shall be allowed by the TÜV Hannover/Sachsen-Anhalt e.V.**

(13) **SCHEDULE**

(14) **EC-TYPE EXAMINATION CERTIFICATE N° TÜV 99 ATEX 1471**

(15) Description of equipment or protective system

The impulse evaluating device type KF**-UF*-Ex*.* is used for the evaluation of impulses of connected transmitter. The impulse evaluating device is not allowed to be installed to be installed in the potentially explosive area.

The highest permissible ambient temperature is 60°C.

Electrical data

| | | |
|---|---|---|
| Supply circuit (Terminal 23, 24) or via Power Rail | nominal voltage:<br>U = 20 V .. 90 V d.c.<br>U = 48 V .. 253 V a.c.<br>U = 20 V .. 30 V d.c. | $U_m$ = 125 d.c. or<br>$U_m$ = 253 V a.c.<br>$U_m$ = 40 V d.c. |
| Current output (terminals 7, 8) | I = 0/4 .. 20 mA, $R_{max}$ = 650 Ω, | $U_m$ = 40 V |
| Contact circuits (terminals 10, 11, 12 and 16, 17, 18) | alternating voltage<br>U = 253 V<br>I = 2 A<br>P = 506 W | direct voltage<br>U = 40 V<br>I = 2 A<br>P = 80 W |
| Output switched (terminals 19, 20, 21) | U = 40 V, I = 50 mA | $U_m$ = 40 V |
| Start up bridging (terminals 13, 14, 15) | passive | $U_m$ = 40 V |
| Interface RS232 (jacked) | | $U_m$ = 40 V |
| Input circuit (terminals 1, 3 resp. 4, 6) | in type of protection "Intrinsic Safety" EEx ia IIC/IIB/IIA<br>maximum values:<br>input p.a.:<br>$U_o$ = 10,1 V<br>$I_o$ = 13 mA<br>$P_o$ = 34 mW<br>$R_i$ = 758 Ω<br>characteristic line: linear<br>The effective internal inductance and capacitance is negligibly small. | parallel wiring resp.:<br>$U_o$ = 10,1 V<br>$I_o$ = 26 mA<br>$P_o$ = 68 mW<br>$R_i$ = 379 Ω |

| | per input | | |
|---|---|---|---|
| | EEx ia IIA | EEx ia IIB | EEx ia IIC |
| $L_o$ | 1 H | 730 mH | 195 mH |
| $C_o$ | 93 µF | 19,4 µF | 2,8 µF |

| | input, parallel | | |
|---|---|---|---|
| | EEx ia IIA | EEx ia IIB | EEx ia IIC |
| $L_o$ | 350 mH | 170 mH | 46 mH |
| $C_o$ | 93 µF | 19,4 µF | 2,8 µF |

The above mentioned values of the outer reactances apply only, on condition that the simultaneous appearance of the outer inductance and capacitance does not need to be considered (e.g. in case of lines).

In the case of simultaneous appearance capacitance and inductance in concentrated form the permissible maximum values have to be taken from the following table:

| | per Input | | |
|---|---|---|---|
| | EEx ia IIA | EEx ia IIB | EEx ia IIC |
| $L_o$ | 20 mH | 10 mH | 5 mH |
| $C_o$ | 3,0 µF | 1,5 µF | 0,5 µF |

| | Input, parallel | | |
|---|---|---|---|
| | EEx ia IIA | EEx ia IIB | EEx ia IIC |
| $L_o$ | 20 mH | 10 mH | 5 mH |
| $C_o$ | 3,0 µF | 1,5 µF | 0,5 µF |

The input circuits are safely galvanically separated from all other circuits up to a peak crest value of the nominal voltage of 375 V.

(16) Test documents are listed in the test report N° 99/19690.

(17) Special condition for safe use

none

(18) Essential Health and Safety Requirements

no additional ones

# 1. E R G Ä N Z U N G

| | |
|---|---|
| **zur Bescheinigungsnummer:** | **TÜV 99 ATEX 1471** |
| Gerät: | Impulsauswertegerät Typ KF**-UF*-Ex*.* |
| Hersteller: | **Pepperl + Fuchs GmbH** |
| Anschrift: | Königsberger Allee 87<br>68307 Mannheim |
| Auftragsnummer: | 8000553321 |
| Ausstellungsdatum: | 27.10.2006 |

Änderungen:

Das Impulsauswertegerät Typ KF**-UF*-Ex*.* darf künftig auch entsprechend den im Prüfbericht aufgelisteten Unterlagen gefertigt werden. Die Änderungen betreffen den Einsatz einer zusätzlichen Leiterplatte für die Stromversorgung sowie die Änderung der bereits verwendeten Leiterplatten.

Das Gerät darf künftig auch in Bereichen verwendet werden, die den Einsatz von Geräten der Gruppe I erfordern. Die entsprechende Kennzeichnung wurde ergänzt.

Die elektrischen Daten wurden angepasst.

Der zulässige Umgebungstemperaturbereich beträgt -20 °C bis +60 °C.

Elektrische Daten

| | | | |
|---|---|---|---|
| Versorgungsstromkreis (Klemmen 23, 24) | U = 20 .. 30 V DC , $U_m$ = 40 V | | (KFD2) |
| | U = 20 .. 90 V DC , $U_m$ = 253 V<br>oder 48 .. 253 V AC | | (KFU8) |
| oder über Power Rail (Klemmen PR: 1, 2) | U = 20 .. 30 V DC , $U_m$ = 40 V | | (nur KFD2) |
| Stromausgang (Klemmen 7, 8) | I = 0/4 .. 20 mA , $U_m$ = 40 V<br>$R_{max}$ = 650 Ω | | |
| Kontaktstromkreise (Klemmen 10, 11, 12 und 16, 17, 18) | Wechselspannung<br>U = 253 V AC<br>I = 2 A<br>P = 500 W<br>cos φ ≥ 0,7 | Gleichspannung<br>U = 40 V<br>I = 2 A<br>P = 80 W<br>ohmsche Last | |
| Transistorausgänge (Klemmen 19, 20 und 20, 21) | | $U_m$ = 40 V | |
| Kontrolleingänge (Klemmen 13, 14 und 14, 15) | | $U_m$ = 40 V | |
| Schnittstelle RS232 (3.5 mm Klinkenbuchse) | | $U_m$ = 40 V | |

Schnittstelle RS485
(Klemmen PR: 3, 5)

$U_m$ = 40 V

Summenfehler
(Klemme PR: 4)

$U_m$ = 40 V

Eingangsstromkreise
(Klemmen 1, 3 bzw. 4, 6)

in Zündschutzart Eigensicherheit EEx ia IIC
bzw. EEx ia I
Höchstwerte:

| je Eingang | 2 Eingänge parallel |
|---|---|
| $U_o$ = 10,1 V | $U_o$ = 10,1 V |
| $I_o$ = 13,5 mA | $I_o$ = 27 mA |
| $P_o$ = 34 mW | $P_o$ = 68 mW |
| $R_i$ = 758 Ω | $R_i$ = 379 Ω |

Kennlinie: linear

Wirksame innere Induktivität: $L_i$ = vernachlässigbar klein
Wirksame innere Kapazität: $C_i$ = vernachlässigbar klein

| je Eingang | | | | |
|---|---|---|---|---|
| | EEx ia IIC | EEx ia IIB | EEx ia IIA | EEx ia I |
| $L_o$ | 195 mH | 730 mH | 1000 mH | 2120 mH |
| $C_o$ | 2,87 µF | 19,4 µF | 93 µF | 79 µF |
| 2 Eingänge parallel | | | | |
| | EEx ia IIC | EEx ia IIB | EEx ia IIA | EEx ia I |
| $L_o$ | 46 mH | 170 mH | 380 mH | 600 mH |
| $C_o$ | 2,87 µF | 19,4 µF | 93 µF | 79 µF |

Die vorgenannten Höchstwerte der äußeren Reaktanzen gelten nur, wenn das gleichzeitige Auftreten von äußerer Induktivität und Kapazität nicht betrachtet werden muss (z.B. bei Leitungen).

Bei gleichzeitigem Auftreten von Kapazität und Induktivität in konzentrierter Form sind die höchstzulässigen Werte je Eingang oder für 2 Eingänge parallel der folgenden Tabelle zu entnehmen:

| | EEx ia IIC | EEx ia IIB | EEx ia IIA | EEx ia I |
|---|---|---|---|---|
| $L_o$ | 5 mH | 10 mH | 20 mH | 20 mH |
| $C_o$ | 0,4 µF | 1,5 µF | 3,0 µF | 3,0 µF |

Die eigensicheren Eingangsstromkreise sind von allen anderen Stromkreisen bis zu einem Scheitelwert der Spannung von 375 V sicher galvanisch getrennt.

Die eigensicheren Eingangsstromkreise sind galvanisch miteinander verbunden.

Alle weiteren Angaben gelten unverändert für diese Ergänzung.

Die Kennzeichnung des Gerätes muss in Zukunft folgende Angaben enthalten:

**II (1) G D [EEx ia] IIC**
**I (M1) [EEx ia] I**

Das Gerät incl. dieser Änderungen erfüllt die Anforderungen der folgenden Normen:

**EN 50 014:1997+A1+A2** **EN 50 020:2002**

(16) Die Prüfungsunterlagen sind im Prüfbericht Nr. 06 YEX 553321 aufgelistet.

(17) Besondere Bedingungen

keine zusätzlichen

(18) Grundlegende Sicherheits- und Gesundheitsanforderungen

keine zusätzlichen

TÜV NORD CERT GmbH, Langemarckstraße 20, 45141 Essen, akkreditiert durch die Zentralstelle der Länder für Sicherheitstechnik (ZLS), Ident. Nr. 0044, Rechtsnachfolger der TÜV NORD CERT GmbH & Co. KG Ident. Nr. 0032

Der Leiter der Zertifizierungsstelle

Schwedt

Geschäftsstelle Hannover, Am TÜV 1, 30519 Hannover, Tel.: +49 (0) 511 986-1455, Fax: +49 (0) 511 986-1590

BA 02 07.06 1.000.000

Translation

# 1. S U P P L E M E N T

| | |
|---|---|
| **to Certificate No.** | **TÜV 99 ATEX 1471** |
| Equipment: | Impulse Evaluating Device type KF**-UF*-Ex*.* |
| Manufacturer: | **Pepperl + Fuchs GmbH** |
| Address: | Königsberger Allee 87<br>68307 Mannheim, Germany |
| Order number: | 8000553321 |
| Date of issue: | 2006-10-27 |

Amendments:

In the future, the impulse evaluating device type KF**-UF*-Ex*.* may also be manufactured according to the test documents listed in the test report. The amendments concern the application of an additional printed circuit board for the power supply as well as the change of the already used printed circuit boards.

In the future, the device may also be used in areas which require the application of devices of group I. The suitable marking was complemented.

The electrical data were adapted.

The permissible temperature range is -20 °C to + 60 °C.

Electrical data

| | | | |
|---|---|---|---|
| Supply circuit (terminals 23, 24) | U = 20 .. 30 V d.c. , $U_m$ = 40 V | | (KFD2) |
| | U = 20 .. 90 V d.c. , $U_m$ = 253 V<br>or 48 .. 253 V a.c. | | (KFU8) |
| or via Power Rail (terminals PR: 1, 2) | U = 20 .. 30 V d.c. , $U_m$ = 40 V | | (only KFD2) |
| Current output (terminals 7, 8) | I = 0/4 .. 20 mA , $U_m$ = 40 V<br>$R_{max}$ = 650 Ω | | |
| Contact circuits (terminals 10, 11, 12 and 16, 17, 18) | alternating voltage<br>U = 253 V AC<br>I = 2 A<br>P = 500 W<br>cos φ ≥ 0.7 | direct voltage<br>U = 40 V<br>I = 2 A<br>P = 80 W<br>resistive load | |
| Transistor outputs (terminals 19, 20 and 20, 21) | $U_m$ = 40 V | | |
| Control inputs (terminals 13, 14 and 14, 15) | $U_m$ = 40 V | | |
| Interface RS232 (3.5 mm plug) | $U_m$ = 40 V | | |

Interface RS485
(terminals PR: 3, 5) $U_m$ = 40 V

Sum error
(terminal PR: 4) $U_m$ = 40V

Input ciruits
(terminals 1, 3 resp. 4, 6)

in type of protection „Intrinsic Safety" EEx ia IIC
resp. EEx ia I
Maximum values:

| per input | 2 inputs parallel |
|---|---|
| $U_o$ = 10.1 V | $U_o$ = 10.1 V |
| $I_o$ = 13.5 mA | $I_o$ = 27 mA |
| $P_o$ = 34 mW | $P_o$ = 68 mW |
| $R_i$ = 758 Ω | $R_i$ = 379 Ω |

Characteristic line: linear

Effective inner inductance: $L_i$ = negligibly small
Effective inner capacitance: $C_i$ = negligibly small

| per input | | | | |
|---|---|---|---|---|
| | EEx ia IIC | EEx ia IIB | EEx ia IIA | EEx ia I |
| $L_o$ | 195 mH | 730 mH | 1000 mH | 2120 mH |
| $C_o$ | 2.87 µF | 19.4 µF | 93 µF | 79 µF |
| 2 inputs parallel | | | | |
| | EEx ia IIC | EEx ia IIB | EEx ia IIA | EEx ia I |
| $L_o$ | 46 mH | 170 mH | 380 mH | 600 mH |
| $C_o$ | 2.87 µF | 19.4 µF | 93 µF | 79 µF |

The above mentioned values of the outer reactances apply only on condition that simultaneous appearance of the outer inductance and capacitance does not to be considered (e.g. in case of lines).

In case of simultaneous appearance of capacitance and inductance in concentrated form the permissible maximum values per input or for 2 inputs parallel have to be taken from the following table:

| | EEx ia IIC | EEx ia IIB | EEx ia IIA | EEx ia I |
|---|---|---|---|---|
| $L_o$ | 5 mH | 10 mH | 20 mH | 20 mH |
| $C_o$ | 0.4 µF | 1.5 µF | 3.0 µF | 3.0 µF |

The intrinsically safe input circuits are safely galvanically separated from other circuits up to a peak crest value of the voltage of 375 V.

The intrinsically safe input circuits are galvanically connected with each other.

BA 02 07.06 1.000.000

TÜV NORD

1. Supplement to Certificate No. TÜV 99 ATEX 1471

---

All other data apply unchanged for this supplement.

In the future, the marking of the equipment shall include the following:

**II (1) G D [EEx ia] IIC**
**I (M1) [EEx ia] I**

The equipment incl. of this amendments meets the requirements of these standards:

**EN 50 014:1997+A1+A2** **EN 50 020:2002**

(16) The test documents are listed in the test report No. 06 YEX 553321.

(17) Special conditions for safe use

no additional ones

(18) Essential Health and Safety Requirements

no additional ones

TÜV NORD CERT GmbH, Langemarckstraße 20, 45141 Essen, accredited by the central office of the countries for safety engineering (ZLS), Ident. Nr. 0044, legal successor of the TÜV NORD CERT GmbH & Co. KG Ident. Nr. 0032

The head of the certification body

Schwedt

Hanover office, Am TÜV 1, 30519 Hanover, Tel.: +49 (0) 511 986-1455, Fax: +49 (0) 511 986-1590

BA 02 07.06 1.000.000

CE

# Doc No: 23424-0

Lenze

## Déclaration de conformité CE

Lenze Drive Systems GmbH
Postfach 10 13 52
D-31763 Hameln

**au sens de la directive 94/9/CE relative aux appareils et systèmes de protection destinés à être utilisés en atmosphères explosibles, annexes VIII et X**

Les produits suivants ont été mis au point, conçus et fabriqués conformément aux dispositions de la directive CE mentionnée ci-dessus, en la seule responsabilité de la société

Site de fabrication : Bösingfeld
Breslauer Straße 3
D-32699 Extertal
Téléphone : ++49 5154 82-0
Télécopie : ++49 5154 82-15 75

**Lenze Drive Systems GmbH, Postfach 10 13 52, D-31763 Hameln**

| **Produits :** | **Types :** | **Spezifikation lt. Typenschild** |
|---|---|---|
| Motoréducteurs | GFL, GST, GKS<br>GKR, GSS | 3 GD |

Par la présente, nous attestons la conformité des motoréducteurs ci-dessus à réductions constantes de Lenze Drive Systems GmbH aux exigences de la version actuelle des directives du Conseil concernant le rapprochement des législations des Etats membres pour les appareils et systèmes de protection destinés à être utilisés en atmosphères explosibles (94/9/CE). La présente déclaration s'applique à tous les exemplaires produits par le constructeur suivant ses plans de fabrication, également concernés par cette déclaration de conformité.

Ces motoréducteurs sont des composants d'entraînement destinés à être installés, exclusivement par du personnel qualifié, dans les

**zones 2 et 22 (catégorie 3 GD).**

Les consignes de sécurité applicables doivent être strictement respectées !

**Normes appliquées, in der zum Unterschriftsdatum gültigen Fassung :**

| | |
|---|---|
| EN 1127-1 | Atmosphères explosibles - Prévention de l'explosion et protection contre l'explosion - Partie 1 : Notions fondamentales et méthodologie |
| EN 13463-1 | Matériels non électriques pour utilisation en atmosphères explosibles - Partie 1 : Prescriptions et méthode de base |
| prEN 13463-5 | Matériels non électriques pour utilisation en atmosphères explosibles - Partie 5 : Protection par sécurité de construction |

Fait à Hameln, le 01/07/2003

(Dr Etienne Nitidem)
Responsable du développement des produits électromécaniques

CE

# Doc No: 23424-0

Lenze

## Déclaration de conformité CE

Lenze Drive Systems GmbH
Postfach 10 13 52
D-31763 Hameln

**au sens de la directive 94/9/CE relative aux appareils et systèmes de protection destinés à être utilisés en atmosphères explosibles, annexes VIII et X**

Les produits suivants ont été mis au point, conçus et fabriqués conformément aux dispositions de la directive CE mentionnée ci-dessus, en la seule responsabilité de la société

Site de fabrication : Bösingfeld
Breslauer Straße 3
D-32699 Extertal
Téléphone : ++49 5154 82-0
Télécopie : ++49 5154 82-15 75

**Lenze Drive Systems GmbH, Postfach 10 13 52, D-31763 Hameln**

| **Produits :** | **Types :** | **Spezifikation lt. Typenschild** |
|---|---|---|
| Motoréducteurs | GFL, GST, GKS<br>GKR, GSS | 2 GD |

Par la présente, nous attestons la conformité des motoréducteurs ci-dessus à réductions constantes de Lenze Drive Systems GmbH aux exigences de la version actuelle des directives du Conseil concernant le rapprochement des législations des Etats membres pour les appareils et systèmes de protection destinés à être utilisés en atmosphères explosibles (94/9/CE). La présente déclaration s'applique à tous les exemplaires produits par le constructeur suivant ses plans de fabrication, également concernés par cette déclaration de conformité.

Ces motoréducteurs sont des composants d'entraînement destinés à être installés, exclusivement par du personnel qualifié, dans les

**zones 1 et 21 (catégorie 2 GD).**

Les consignes de sécurité applicables doivent être strictement respectées !

**Normes appliquées, in der zum Unterschriftsdatum gültigen Fassung :**

| | |
|---|---|
| EN 1127-1 | Atmosphères explosibles - Prévention de l'explosion et protection contre l'explosion - Partie 1 : Notions fondamentales et méthodologie |
| EN 13463-1 | Matériels non électriques pour utilisation en atmosphères explosibles - Partie 1 : Prescriptions et méthode de base |
| prEN 13463-5 | Matériels non électriques pour utilisation en atmosphères explosibles - Partie 5 : Protection par sécurité de construction |
| prEN 13463-8 | Matériels non électriques pour utilisation en atmosphères explosibles - Partie 5 : Schutz durch Flüssigkeitskapselung |

Fait à Hameln, le 01/07/2003

(Dr Etienne Nitidem)
Responsable du développement des produits électromécaniques

D

**Doc No: 27255-1**

ZERTIFIKAT ◆ CERTIFICATE ◆ 認証書 ◆ СЕРТИФИКАТ ◆ CERTIFICADO ◆ CERTIFICAT

# EG - Zertifikat

## Nr.: EX2 03 04 20166 021

TÜV PRODUCT SERVICE

Entscheidung gemäß Anhang IV der Richtlinie des Rates Nr. 94/9/EG für Geräte und Schutzsysteme zur bestimmungsgemäßen Verwendung in explosionsgefährdeten Bereichen.

Die Zertifizierstelle von TÜV PRODUCT SERVICE GMBH bestätigt hiermit, daß die Firma

**elobau Elektrobauelemente**
**GmbH & Co. KG**
**Scherrwiesenweg 12**

**D-88316 Isny / Allgäu**

in der/den Fertigungsstätte(n)

**elobau Elektrobauelemente**
**GmbH & Co. KG**
**Zeppelinstr. 44**

**D-88299 Leutkirch**

für die Produktion von:

| | |
|---|---|
| Flachschalter: | Typenreihe 610 |
| Rohrgehäuse: | Typenreihe 620 |
| Rohrschalter: | Typenreihe 650 |
| Maschinensicherheitsschalter: | Typenreihe 671 |
| Hydraulikzylinderschalter: | Typenreihe 680 |

**der Gruppe II, Kategorie 1G, 2G und 2D**

**in den elektrischen Zündschutzarten „Eigensicherheit (i)" und „Vergusskapselung (m)"**

ein Qualitätssicherungssystem anwendet, das den Anforderungen der EG-Richtlinie entspricht.

Ergebnisse siehe Auditbericht-Nr.: **70043882**

Unter der Voraussetzung, daß eine regelmäßige Überwachung durchgeführt wird, ist dieses Zertifikat gültig bis 2006-04-14.

Freigegeben mit der obigen Zertifikats-Nr. durch die Zertifizierstelle von TÜV PRODUCT SERVICE

Abteilung: TECS / mre
Datum: 14.04.2003

TÜV PRODUCT SERVICE GMBH ist benannte Stelle gemäß der Richtlinie des Rates Nr. 94/9/EG für Geräte und Schutzsysteme zur bestimmungsgemäßen Verwendung in explosionsgefährdeten Bereichen mit der Kennummer 0123.

**Doc No: 27255-1**

(1) # EG-Baumusterprüfbescheinigung

(2) **- Richtlinie 94/9/EG -**
**Geräte und Schutzsysteme zur bestimmungsgemäßen Verwendung in explosionsgefährdeten Bereichen**

(3) # BVS 03 ATEX E 126 X

(4) **Gerät:** **Endschalter Typ 6** *** *** **-**

(5) **Hersteller:** **elobau Elektrobauelemente GmbH & Co. KG**

(6) **Anschrift:** **D-88306 Isny/Allgäu**

(7) Die Bauart dieses Gerätes sowie die verschiedenen zulässigen Ausführungen sind in der Anlage zu dieser Baumusterprüfbescheinigung festgelegt.

(8) Die Zertifizierungsstelle der Deutsche Montan Technologie GmbH, benannte Stelle Nr. 0158 gemäß Artikel 9 der Richtlinie 94/9/EG des Europäischen Parlaments und des Rates vom 23. März 1994, bescheinigt, dass das Gerät die grundlegenden Sicherheits- und Gesundheitsanforderungen für die Konzeption und den Bau von Geräten und Schutzsystemen zur bestimmungsgemäßen Verwendung in explosionsgefährdeten Bereichen gemäß Anhang II der Richtlinie erfüllt.
Die Ergebnisse der Prüfung sind in dem Prüfprotokoll BVS PP 03.2287 EG niedergelegt.

(9) Die grundlegenden Sicherheits- und Gesundheitsanforderungen werden erfüllt durch Übereinstimmung mit

| | |
|---|---|
| EN 50014:1997 + A1 – A2 | Allgemeine Bestimmungen |
| EN 50028:1987 | Vergusskapselung ´m´ |
| EN 50020:2002 | Eigensicherheit ´i´ |
| EN 50284:1999 | Gerätegruppe II Kategorie 1G |
| EN 50281-1-1:1998 +A1 | Staubexplosionsschutz |

(10) Falls das Zeichen „X" hinter der Bescheinigungsnummer steht, wird in der Anlage zu dieser Bescheinigung auf besondere Bedingungen für die sichere Anwendung des Gerätes hingewiesen.

(11) Diese EG-Baumusterprüfbescheinigung bezieht sich nur auf die Konzeption und die Baumusterprüfung des beschriebenen Gerätes in Übereinstimmung mit der Richtlinie 94/9/EG.
Für Herstellung und in Verkehr bringen des Gerätes sind weitere Anforderungen der Richtlinie zu erfüllen, die nicht durch diese Bescheinigung abgedeckt sind.

(12) Die Kennzeichnung des Gerätes muss die folgenden Angaben enthalten:

**II 1G EEx ia IIB / IIC T5 / T6** bzw. **II 1/2G EEx ia IIC T5 /T6**
**II 2G EEx ia IIC T5 /T6** bzw. **II 2G EEx m II T5 / T6**
**II 2D IP67 / IP 68 T105°C** Zuordnung siehe Tabellen in 15.1.2

**Deutsche Montan Technologie GmbH**
Bochum, den 16. Dezember 2003

DMT Zertifizierungsstelle

Fachbereich


Dieses Zertifikat darf nur unverändert weiterverbreitet werden.
Dinnendahlstrasse 9 44809 Bochum Telefon - Phone 0201/172-3947 Telefax-Fax 0201/172-3948
(bis 31.05.2003: Deutsche Montan Technologie GmbH Am Technologiepark 1 45307 Essen)

(13) Anlage zur

(14) # EG-Baumusterprüfbescheinigung

## BVS 03 ATEX E 126 X

(15) 15.1 Gegenstand und Typ
Endschalter Typ 6** *** *** **-**

15.1.1 Typenschlüssel 6** * ** * * * ** - **
6ab c de f g h ij - kl

ab Gehäusebauform
10 = Flachschalter Zink-Druckguss (GD-ZnAl4Cu1)
20 = Rohrschalter Kunststoff PA66
50 = Rohrschalter VA1.4571, (alternativ 1.4305 oder 1.4401, PG13,5 (M20)
71 = MSS VA 1.4571 (alternativ 1.4305 oder 1.4401), M30
80 = Hallsensor VA 1.4571 (alternativ 1.4401), G3/8.

c Ausführungsvariante
0 = Standard
1 = (Kennziffer nicht verwendet)
2 = MSS
3 = Schutzschlauchverschraubung
V = MSS verknüpfbar

de 10 = Schließer "A"
20 = Öffner "B"
30 = Wechsler "C"
40 = "A/B" bistabil
45 = "C" bistabil
50 = npn-Transistor-Ausgang
55 = pnp-Transistor-Ausgang
61 = MSS 3 x Schließer
62 = MSS 2 x Schließer
71 = MSS ein Öffner, ein Schließer

f M = Vergussgekapselt; ohne äußere Potentialausgleichsleiter-Anschlussklemme
N = Vergussgekapselt; mit äußerer Potentialausgleichsleiter-Anschlussklemme
O = Vergussgekapselt; ohne äußere Potentialausgleichsleiter-Anschlussklemme, geschweißt
P = Vergussgekapselt; mit äußerer Potentialausgleichsleiter-Anschlussklemme, geschweißt
I = Eigensicher; ohne äußere Potentialausgleichsleiter-Anschlussklemme
K = Eigensicher; mit äußerer Potentialausgleichsleiter-Anschlussklemme
G = Eigensicher; ohne äußere Potentialausgleichsleiter-Anschlussklemme, geschweißt
H = Eigensicher; mit äußerer Potentialausgleichsleiter-Anschlussklemme, geschweißt


Dieses Zertifikat darf nur unverändert weiterverbreitet werden.
Dinnendahlstrasse 9 44809 Bochum Telefon - Phone 0201/172-3947 Telefax-Fax 0201/172-3948
(bis 31.05.2003: Deutsche Montan Technologie GmbH Am Technologiepark 1 45307 Essen)

g Kabeltyp *)
1 = Leitung Boflex W (PVC grau) 2 x 075 / 3 x 0,75 / 4 x 0,75
2 = Leitung SIHSI (Silikon rot) 2 x 0,75 / 3 x 0,75
3 = Leitung BOY11Y (PUR schwarz) 2 x 0,75 / 3 x 0,75
4 = Leitung LIYCYW (PVC abgeschirmt) 2 x 0,75 / 3 x 0,75 / 4 x 0,5
5 = Leitung SXCS (Silicon abgeschirmt) 2 x 0,75 / 3 x 0,75
6 = Leitung LIFYY11Y (PUR schwarz) 3 x 0,25
7 = Leitung LIYYW (PVC grau) 3 x 0,25
U = Leitung Y-UL 2517 (PVC grau) 3 x 0,75 / 4 x 0,75

*) für eigensichere Ausführungen optional mit blauem Kabelmantel oder mit grauem Schrumpfschlauch markiert (betrifft nur 1/2G und 2G Anwendungen)

h Schutzschlauch
0 = kein Schutzschlauch
1 = Schutzschlauch Typ 455 MP 9,8X13,2
2 = Schutzschlauch Typ Anaconda D.L.1/2"

ij nicht Ex-relevante Angaben

kl Kabelüberlänge; Standard = 1 Meter


Dieses Zertifikat darf nur unverändert weiterverbreitet werden.
Dinnendahlstrasse 9 44809 Bochum Telefon - Phone 0201/172-3947 Telefax-Fax 0201/172-3948
(bis 31.05.2003: Deutsche Montan Technologie GmbH Am Technologiepark 1 45307 Essen)

15.1.2 Die Zuordnung der unterschiedlichen Ausführungen des Endschalters zu Zündschutzarten, Temperaturklassen, Umgebungstemperaturbereich und Gerätekategorien ist den folgenden Tabellen zu entnehmen:

| Endschalter Typ | Kategorie des Endschalters | zusätzliche Kennzeichnung | | Besonderheiten bzw. Einschränkungen | Umgebungs-temperatur-bereich |
|---|---|---|---|---|---|
| | | nicht eigensicher | eigensicher | | |
| 610 010 M*0 **-**<br>610 010 N*0 **-**<br>610 020 M*0 **-**<br>610 020 N*0 **-**<br>610 030 M*0 **-**<br>610 030 N*0 **-**<br>610 040 M*0 **-**<br>610 040 N*0 **-**<br>610 045 M*0 **-**<br>610 045 N*0 **-** | 2G | EEx m II T5/T6 | | IP67;<br>siehe 17.4 | - 25° C<br>≤ $T_a$ ≤<br>70° C (T6)<br>85° C (T5) |
| 620 010 M*0 **-**<br>620 020 M*0 **-**<br>620 030 M*0 **-** | 2G | EEx m II T5/T6 | | IP67;<br>siehe 17.4 | - 25° C<br>≤ $T_a$ ≤<br>70° C (T6)<br>85° C (T5) |
| 650 *10 M** **-**<br>650 *10 N** **-**<br>650 *30 M** **-**<br>650 *30 N** **-** | 2G | EEx m II T5/T6 | | IP67;<br>siehe 17.4 | - 25° C<br>≤ $T_a$ ≤<br>70° C (T6)<br>85° C (T5) |
| 671 26* M*0 **-**<br>671 26* N*0 **-**<br>671 26* O*0 **-**<br>671 26* P*0 **-**<br>671 V62 M*0 **-**<br>671 V62 N*0 **-**<br>671 V62 O*0 **-**<br>671 V62 P*0 **-**<br>671 271 M*0 **-**<br>671 271 N*0 **-**<br>671 271 O*0 **-**<br>671 271 P*0 **-** | 2G | EEx m II T5/T6 | | IP68 (10 bar);<br>I ≤ 60 mA;<br>siehe 17.4 | - 25° C<br>≤ $T_a$ ≤<br>70° C (T6)<br>85° C (T5) |
| 671 26* M*0 **-**<br>671 26* N*0 **-**<br>671 26* O*0 **-**<br>671 26* P*0 **-**<br>671 V62 M*0 **-**<br>671 V62 N*0 **-**<br>671 V62 O*0 **-**<br>671 V62 P*0 **-**<br>671 271 M*0 **-**<br>671 271 N*0 **-**<br>671 271 O*0 **-**<br>671 271 P*0 **-** | 2G | EEx m II T5/T6 | | IP68 (10 bar);<br>60 mA<br>≤ I ≤<br>150 mA;<br>siehe 17.4 | - 25° C<br>≤ $T_a$ ≤<br>50° C (T6)<br>70° C (T5) |
| 680 0** M*0 **-**<br>680 0** N*0 **-** | 2G | EEx m II T5/T6 | | IP68 (10 bar);<br>siehe 17.4 | - 25° C<br>≤ $T_a$ ≤<br>70° C (T6)<br>85° C (T5) |


Dieses Zertifikat darf nur unverändert weiterverbreitet werden.
Dinnendahlstrasse 9 44809 Bochum Telefon - Phone 0201/172-3947 Telefax-Fax 0201/172-3948
(bis 31.05.2003: Deutsche Montan Technologie GmbH Am Technologiepark 1 45307 Essen)

| Endschalter Typ | Kategorie des Endschalters | zusätzliche Kennzeichnung | | Besonderheiten bzw. Einschränkungen | Umgebungs-temperatur-bereich |
|---|---|---|---|---|---|
| | | nicht eigensicher | eigensicher | | |
| 610 010 I*0 **-**<br>610 010 K*0 **-**<br>610 020 I*0 **-**<br>610 020 K*0 **-**<br>610 030 I*0 **-**<br>610 030 K*0 **-**<br>610 040 I*0 **-**<br>610 040 K*0 **-**<br>610 045 I*0 **-**<br>610 045 K*0 **-** | 2G | | EEx ia IIC T5/T6 | IP67 | - 25° C<br>≤ $T_a$ ≤<br>70° C (T6)<br>85° C (T5) |
| 620 010 I*0 **-**<br>620 020 I*0 **-**<br>620 030 I*0 **-** | 2G | | EEx ia IIC T5/T6 | IP67;<br>siehe 17.1.2 | - 25° C<br>≤ $T_a$ ≤<br>70° C (T6)<br>85° C (T5) |
| 650 *10 I** **-**<br>650 *10 K** **-**<br>650 *30 I** **-**<br>650 *30 K** **-** | 2G | | EEx ia IIC T5/T6 | IP67 | - 25° C<br>≤ $T_a$ ≤<br>70° C (T6)<br>85° C (T5) |
| 671 26* I*0 **-**<br>671 26* K*0 **-**<br>671 26* G*0 **-**<br>671 26* H*0 **-**<br>671 V62 I*0 **-**<br>671 V62 K*0 **-**<br>671 V62 G*0 **-**<br>671 V62 H*0 **-**<br>671 271 I*0 **-**<br>671 271 K*0 **-**<br>671 271 G*0 **-**<br>671 271 H*0 **-** | 2G | | EEx ia IIC T5/T6 | IP68 (10 bar);<br>$I_i$ ≤ 60 mA | - 25° C<br>≤ $T_a$ ≤<br>70° C (T6)<br>85° C (T5) |
| 671 26* I*0 **-**<br>671 26* K*0 **-**<br>671 26* G*0 **-**<br>671 26* H*0 **-**<br>671 V62 I*0 **-**<br>671 V62 K*0 **-**<br>671 V62 G*0 **-**<br>671 V62 H*0 **-**<br>671 271 I*0 **-**<br>671 271 K*0 **-**<br>671 271 G*0 **-**<br>671 271 H*0 **-** | 2G | | EEx ia IIC T5/T6 | IP68 (10 bar);<br>60 mA<br>≤ $I_i$ ≤<br>150 mA;<br>siehe 17.1.1 | - 25° C<br>≤ $T_a$ ≤<br>50° C (T6)<br>70° C (T5) |
| 680 0** I*0 **-**<br>680 0** K*0 **-** | 2G | | EEx ia IIC T5/T6 | IP68 (10 bar); | - 25° C<br>≤ $T_a$ ≤<br>70° C (T6)<br>85° C (T5) |


Dieses Zertifikat darf nur unverändert weiterverbreitet werden.
Dinnendahlstrasse 9 44809 Bochum Telefon - Phone 0201/172-3947 Telefax-Fax 0201/172-3948
(bis 31.05.2003: Deutsche Montan Technologie GmbH Am Technologiepark 1 45307 Essen)

| Endschalter Typ | Kategorie des Endschalters | zusätzliche Kennzeichnung | | Besonderheiten bzw. Einschränkungen | Umgebungs-temperatur-bereich |
|---|---|---|---|---|---|
| | | nicht eigensicher | eigensicher | | |
| 620 010 I*0 **-**<br>620 020 I*0 **-**<br>620 030 I*0 **-** | 1/2G | | EEx ia IIC T5/T6 | IP67;<br>$P_i \leq 0{,}5$ W<br>siehe 17.2.2 | - 25° C<br>$\leq T_a \leq$<br>70° C (T6)<br>85° C (T5) |
| 650 *10 K** **-**<br>650 *10 I** **-**<br>650 *30 K** **-**<br>650 *30 I** ** ** | 1/2G | | EEx ia IIC T5/T6 | IP67;<br>$P_i \leq 0{,}5$ W;<br>siehe 17.2.1 | - 25° C<br>$\leq T_a \leq$<br>70° C (T6)<br>85° C (T5) |
| 671 26* I*0 **-**<br>671 26* K*0 **-**<br>671 26* G*0 **-**<br>671 26* H*0 **-**<br>671 V62 I*0 **-**<br>671 V62 K*0 **-**<br>671 V62 G*0 **-**<br>671 V62 H*0 **-**<br>671 271 I*0 **-**<br>671 271 K*0 **-**<br>671 271 G*0 **-**<br>671 271 H*0 **-** | 1/2G | | EEx ia IIC T5/T6 | IP68 (10 bar);<br>$I_i \leq 60$ mA;<br>siehe 17.2.1 | - 25° C<br>$\leq T_a \leq$<br>70° C (T6)<br>85° C (T5) |
| 671 26* I*0 **-**<br>671 26* K*0 **-**<br>671 26* G*0 **-**<br>671 26* H*0 **-**<br>671 V62 I*0 **-**<br>671 V62 K*0 **-**<br>671 V62 G*0 **-**<br>671 V62 H*0 **-**<br>671 271 I*0 **-**<br>671 271 K*0 **-**<br>671 271 G*0 **-**<br>671 271 H*0 **-** | 1/2G | | EEx ia IIC T5/T6 | IP68 (10 bar);<br>60 mA<br>$\leq I_i \leq$<br>150 mA;<br>siehe 17.2.1<br>und 17.2.3 | - 25° C<br>$\leq T_a \leq$<br>50° C (T6)<br>70° C (T5) |
| 680 0** I*0 **-**<br>680 0** K*0 **-** | 1/2G | | EEx ia IIC T5/T6 | IP68 (10 bar);<br>siehe 17.2.1 | - 25° C<br>$\leq T_a \leq$<br>70° C (T6)<br>85° C (T5) |


Dieses Zertifikat darf nur unverändert weiterverbreitet werden.
Dinnendahlstrasse 9 44809 Bochum Telefon - Phone 0201/172-3947 Telefax-Fax 0201/172-3948
(bis 31.05.2003: Deutsche Montan Technologie GmbH Am Technologiepark 1 45307 Essen)

| Endschalter Typ | Kategorie des Endschalters | zusätzliche Kennzeichnung | | Besonderheiten bzw. Einschränkungen | Umgebungs-temperatur-bereich |
|---|---|---|---|---|---|
| | | nicht eigensicher | eigensicher | | |
| 610 0*0 M30 **-**<br>610 0*0 M20 **-**<br>610 0*0 MU0 **-**<br>610 0*0 M60 **-**<br>610 0*0 M70 **-**<br>610 0*0 M10 **-**<br>610 0*0 N30 **-**<br>610 0*0 N20 **-**<br>610 0*0 NU0 **-**<br>610 0*0 N60 **-**<br>610 0*0 N70 **-**<br>610 0*0 N10 **-** | 2D | IP67 T105°C | | siehe 17.5 | - 25° C ≤ $T_a$ ≤ 85° C |
| 620 0*0 M30 **-**<br>620 0*0 M20 **-**<br>620 0*0 MU0 **-**<br>620 0*0 M60 **-**<br>620 0*0 M70 **-**<br>620 0*0 M10 **-** | 2D | IP67 T105°C | | siehe 17.5 | - 25° C ≤ $T_a$ ≤ 85° C |
| 650 0*0 M30 **-**<br>650 0*0 M20 **-**<br>650 0*0 MU0 **-**<br>650 0*0 M60 **-**<br>650 0*0 M70 **-**<br>650 0*0 M10 **-**<br>650 0*0 N30 **-**<br>650 0*0 N20 **-**<br>650 0*0 NU0 **-**<br>650 0*0 N60 **-**<br>650 0*0 N70 **-**<br>650 0*0 N10 **-**<br>650 0*0 M*1 **-**<br>650 0*0 N*1 **-** | 2D | IP67 T105°C | | siehe 17.5 | - 25° C ≤ $T_a$ ≤ 85° C |
| 671 *** *30 **-**<br>671 *** *20 **-**<br>671 *** *U0 **-**<br>671 *** *60 **-**<br>671 *** *70 **-**<br>671 *** *10 **-** | 2D | IP68 T105°C | | IP68 (10 bar); I ≤ 60 mA; siehe 17.5 | - 25° C ≤ $T_a$ ≤ 85° C |
| 671 *** *30 **-**<br>671 *** *20 **-**<br>671 *** *U0 **-**<br>671 *** *60 **-**<br>671 *** *70 **-**<br>671 *** *10 **-** | 2D | IP68 T105°C | | IP68 (10 bar); 60 mA ≤ I ≤ 150 mA; siehe 17.5 | - 25° C ≤ $T_a$ ≤ 70° C |
| 680 0** M60 **-**<br>680 0** M70 **-**<br>680 0** N60 **-**<br>680 0** N70 **-** | 2D | IP68 T105°C | | IP68 (10 bar); siehe 17.5 | - 25° C ≤ $T_a$ ≤ 85° C |


Dieses Zertifikat darf nur unverändert weiterverbreitet werden.
Dinnendahlstrasse 9 44809 Bochum Telefon - Phone 0201/172-3947 Telefax-Fax 0201/172-3948
(bis 31.05.2003: Deutsche Montan Technologie GmbH Am Technologiepark 1 45307 Essen)

| Endschalter Typ | Kategorie des Endschalters | zusätzliche Kennzeichnung | | Besonderheiten bzw. Einschränkungen | Umgebungs-temperatur-bereich |
|---|---|---|---|---|---|
| | | nicht eigensicher | eigensicher | | |
| 610 0*0 I60 **-**<br>610 0*0 I70 **-**<br>610 0*0 K60 **-**<br>610 0*0 K70 **-** | 1G | | EEx ia IIB T5/T6 | IP67;<br>$P_i \leq 0,5$ W<br>siehe 17.3 | - 25° C<br>$\leq T_a \leq$<br>70° C (T6)<br>85° C (T5) |
| 620 0*0 I60 **-**<br>620 0*0 I70 **-** | 1G | | EEx ia IIB T5/T6 | IP67;<br>$P_i \leq 0,5$ W<br>siehe 17.3 | - 25° C<br>$\leq T_a \leq$<br>70° C (T6)<br>85° C (T5) |
| 650 0*0 I60 **-**<br>650 0*0 I70 **-**<br>650 0*0 K60 **-**<br>650 0*0 K70 **-**<br>650 0*0 I*2 **-**<br>650 0*0 K*2 **-** | 1G | | EEx ia IIB T5/T6 | IP67;<br>$P_i \leq 0,5$ W<br>siehe 17.3 | - 25° C<br>$\leq T_a \leq$<br>70° C (T6)<br>85° C (T5) |
| 650 0*0 I*1 **-**<br>650 0*0 K*1 **-** | 1G | | EEx ia IIC T5/T6 | IP67;<br>$P_i \leq 0,5$ W<br>siehe 17.3 | - 25° C<br>$\leq T_a \leq$<br>70° C (T6)<br>85° C (T5) |
| 671 *** *60 **-**<br>671 *** *70 **-** | 1G | | EEx ia IIB T5/T6 | IP68 (10 bar);<br>$I \leq 60$ mA;<br>siehe 17.3 | - 25° C<br>$\leq T_a \leq$<br>70° C (T6)<br>85° C (T5) |
| 671 *** *60 **-**<br>671 *** *70 **-** | 1G | | EEx ia IIB T5/T6 | IP68 (10 bar);<br>60 mA<br>$\leq I \leq$<br>150 mA;<br>siehe 17.5 | - 25° C<br>$\leq T_a \leq$<br>50° C (T6)<br>70° C (T5) |
| 680 0** I60 **-**<br>680 0** I70 **-**<br>680 0** K60 **-**<br>680 0** K70 **-** | 1G | | EEx ia IIB T5/T6 | IP68 (10 bar);<br>siehe 17.3 | - 25° C<br>$\leq T_a \leq$<br>70° C (T6)<br>85° C (T5) |


Dieses Zertifikat darf nur unverändert weiterverbreitet werden.
Dinnendahlstrasse 9 44809 Bochum Telefon - Phone 0201/172-3947 Telefax-Fax 0201/172-3948
(bis 31.05.2003: Deutsche Montan Technologie GmbH Am Technologiepark 1 45307 Essen)

15.2 Beschreibung

Der Endschalter Typ 610 0** **0 **-** besteht aus einem metallischen Gussgehäuse (GD - Zn Al 4 Cu 1), das einen in Vergussmasse eingebetteten Reedkontakt (Ein/Aus- oder Umschaltkontakt) enthält.
Eine Anschlussleitung mit freien Leitungsenden ist mittels einer geeigneten Leitungseinführung in das Gehäuse geführt und mit den Anschlüssen des Kontaktes fest verbunden.

Der Endschalter Typ 620 0** **0 **-** besteht aus einem zylindrischen Kunststoffgehäuse (PA66), das einen in Vergussmasse eingebetteten Reedkontakt (Ein/Aus- oder Umschaltkontakt) enthält.
Eine Anschlussleitung mit freien Leitungsenden ist mittels einer geeigneten Leitungseinführung in das Gehäuse geführt und mit den Anschlüssen des Kontaktes fest verbunden.

Der Endschalter Typ 650 0*0 **0 **-** besteht aus einem Kunststoffrohr, das einen in Vergussmasse eingebetteten Reedkontakt (Ein/Aus- oder Umschaltkontakt) enthält.
Das Kunststoffrohr ist von einem metallischen zylindrischen Gehäuse (Werkstoff 1.4571, 1.4305 oder 1.4401) umschlossen.
Eine Anschlussleitung mit freien Leitungsenden ist mittels einer geeigneten Leitungseinführung in das Gehäuse geführt und mit den Anschlüssen des Kontaktes fest verbunden.

Der Endschalter Typ 650 3*0 **0 **-** besteht aus einem Kunststoffrohr, das einen in Vergussmasse eingebetteten Reedkontakt (Ein/Aus- oder Umschaltkontakt) enthält. Das Kunststoffrohr ist von einem metallischen zylindrischen Gehäuse (Werkstoff 1.4571, 1.4305 oder 1.4401) umschlossen.
Eine Anschlussleitung mit freien Leitungsenden ist mittels einer geeigneten Leitungseinführung in das Gehäuse geführt und mit den Anschlüssen des Kontaktes fest verbunden.
Am Gehäuse ist eine Schlauchverschraubung angebracht, an der ein vom Kunden ausgewählter Schutzschlauch montiert werden kann.

Der Endschalter Typ 650 3*0 **1 **-** und Typ 650 3*0 **2 **-** besteht aus einem Kunststoffrohr, das einen in Vergussmasse eingebetteten Reedkontakt (Ein/Aus- oder Umschaltkontakt) enthält. Das Kunststoffrohr ist von einem metallischen zylindrischen Gehäuse (Werkstoff 1.4571, 1.4305 oder 1.4401) umschlossen.
Eine Anschlussleitung mit freien Leitungsenden ist mittels einer geeigneten Leitungseinführung in das Gehäuse geführt und mit den Anschlüssen des Kontaktes fest verbunden. Am Gehäuse ist eine Schlauchverschraubung mit Schutzschlauch montiert . Ausführung des Schlauches siehe unter15.1.1 Typenschlüssel „h"

Der Endschalter Typ 671 *** **0 **-** besteht aus einem zylindrischen metallischen Gehäuse (Werkstoff Nr. 1.4571, 1.4305 oder 1.4401), das - je nach Ausführung - zwei oder drei Widerstände und zwei (drei) Reedkontakte (3 Schließer,2 Schließer, Schließer/Öffner) enthält. Die Bauteile sind in Vergussmasse eingebettet.
Eine Anschlussleitung mit freien Leitungsenden ist mittels einer geeigneten Leitungseinführung in das Gehäuse geführt und mit den Anschlüssen der Kontakte fest verbunden.

Der Endschalter Typ 680 *** **0 **-** besteht aus einem Kunststoffrohr, das eine in Vergussmasse eingebettete Hybrid-Schaltung mit elektronischen Bauteilen und einem Magnetfeldempfindlichen Bauteil ((NPN oder PNP Ausgang) enthält. Das Kunststoffrohr ist von einem metallischen zylindrischen Gehäuse (Werkstoff 1.4571, 1.4305 oder 1.4401) umschlossen.
Eine Anschlussleitung mit freien Leitungsenden ist mittels einer geeigneten Leitungseinführung in das Gehäuse geführt und mit den Anschlüssen des Kontaktes fest verbunden.

Die Endschalter mit Kennbuchstaben "M", "N", "O" oder "P" in Spalte "f" des Typenschlüssels sind zum Anschluss an nichteigensichere Stromkreise bestimmt.
Kennbuchstaben „O" und „P" nur für MSS geschweißt.

Die Endschalter mit Kennbuchstaben "I", "K", "G" oder "H" in Spalte "f" des Typenschlüssels sind zum Anschluss an eigensichere Stromkreise bestimmt.
Kennbuchstaben „G" und „H" nur für MSS geschweißt.


Dieses Zertifikat darf nur unverändert weiterverbreitet werden.
Dinnendahlstrasse 9 44809 Bochum Telefon - Phone 0201/172-3947 Telefax-Fax 0201/172-3948
(bis 31.05.2003: Deutsche Montan Technologie GmbH Am Technologiepark 1 45307 Essen)

15.3 Kenngrößen

15.31 nichteigensicher betriebene Endschalter

15.3.1.1 Endschalter Typenreihe 610 0** M/N*0 **-**

| Typ | 610 010 **0**-** 610 020 **0**-** | 610 030 **0**-** | 610 040 **0**-** | 610 045 **0**-** |
|---|---|---|---|---|
| Bemessungsspannung | AC/DC 250 V | AC/DC 230 V | AC/DC 250 V | AC/DC 230 V |
| Bemessungs-stromstärke | 3 A | 1 A | 1 A | 0,6 A |
| Bemessungsleistung | 100 VA / 100 W | 60 VA / 60 W | 60 VA / 60 W | 45 VA / 45 W |
| Temperaturklasse | T6 / T5 | T6 / T5 | T6 / T5 | T6 / T5 |
| max. Umgebungs-temperatur | 70°C / 85°C | 70°C / 85°C | 70°C / 85°C | 70°C / 85°C |

15.3.1.2 Endschalter Typenreihe 620 0** M/N*0 **-**

| Typ | 620 010 **0**-** 620 020 **0**-** | 620 030 **0**-** |
|---|---|---|
| Bemessungsspannung | AC/DC 230 V | AC/DC 48 V |
| Bemessungs-stromstärke | 2 A | 1 A |
| Bemessungsleistung | 60 VA / 60 W | 20 VA / 20 W |
| Temperaturklasse | T6 / T5 | T6 / T5 |
| max. Umgebungs-temperatur | 70°C / 85°C | 70°C / 85°C |

15.3.1.3 Endschalter Typenreihe 650 *** M/N*** **-**

| Typ | 650 *10 *** **-** | 650 *30 *** **-** |
|---|---|---|
| Bemessungsspannung | AC/DC 250 V | AC/DC 230 V |
| Bemessungs-stromstärke | 3 A | 1 A |
| Bemessungsleistung | 100 VA / 100 W | 60 VA / 60 W |
| Temperaturklasse | T6 / T5 | T6 / T5 |
| max. Umgebungs-temperatur | 70°C / 85°C | 70°C / 85°C |

15.3.1.4 Endschalter Typenreihe 671 *** M/N/O/P** **-**

| Typ | 671 *** *** **-** | 671 *** *** **-** |
|---|---|---|
| Bemessungsspannung | AC/DC 24 V | AC/DC 24 V |
| Bemessungs-stromstärke (statisch) | 60 mA | 150 mA |
| Bemessungs-stromstärke (dynamisch) | 500 mA für zwei Sekunden | 500 mA für zwei Sekunden |
| Bemessungs-schaltleistung | 5 VA / 5 W | 5 VA / 5 W |
| Temperaturklasse | T6 / T5 | T6 / T5 |
| max. Umgebungs-temperatur | 70°C / 85°C | 50°C / 70°C |


Dieses Zertifikat darf nur unverändert weiterverbreitet werden.
Dinnendahlstrasse 9 44809 Bochum Telefon - Phone 0201/172-3947 Telefax-Fax 0201/172-3948
(bis 31.05.2003: Deutsche Montan Technologie GmbH Am Technologiepark 1 45307 Essen)

15.3.1.5 Endschalter Typenreihe 680 0** M/N*0 **-**

| Typ | 680 0** **0 **-** |
|---|---|
| Bemessungsspannung | DC 10 bis 30 V |
| Bemessungs-stromstärke | 200 mA |
| Nennleistung | 0,5. W |
| Temperaturklasse | T6 / T5 |
| max. Umgebungs-temperatur | 70°C / 85°C |

15.3.2 eigensicher betriebene Endschalter

15.3.2.1 Endschalter Typenreihe 610 0** I/K*0 **-**

| Typ | 610 010 **0**-** 610 020 **0**-** | 610 030 **0**-** | 610 040 **0**-** | 610 045 **0**-** |
|---|---|---|---|---|
| Spannung $U_i$ | AC/DC 60 V | AC/DC 60 V | AC/DC 60 V | AC/DC 60 V |
| Stromstärke $I_i$ | 3 A | 1 A | 1 A | 0,6 A |
| Leistung $P_i$ | 500 mW *) | 500 mW *) | 500 mW *) | 500 mW *) |
| innere wirksame Kapazität $C_i$ | siehe 15.3.2.6 | siehe 15.3.2.6 | siehe 15.3.2.6 | siehe 15.3.2.6 |
| innere wirksame Induktivität $L_i$ | siehe 15.3.2.6 | siehe 15.3.2.6 | siehe 15.3.2.6 | siehe 15.3.2.6 |
| Temperaturklasse | T6 / T5 | T6 / T5 | T6 / T5 | T6 / T5 |
| max. Umgebungs-temperatur | 70°C / 85°C | 70°C / 85°C | 70°C / 85°C | 70°C / 85°C |

*) gilt nur für 1G und 1/2G Anwendung; für 2G Anwendung nicht relevant

15.3.2.2 Endschalter Typenreihe 620 0** I/K*0 **-**

| Typ | 620 010 **0**-** 620 020 **0**-** | 620 030 **0**-** |
|---|---|---|
| Spannung $U_i$ | AC/DC 60 V | AC/DC 48 V |
| Stromstärke $I_i$ | 2 A | 1 A |
| Leistung $P_i$ | 500 mW *) | 500 mW *) |
| innere wirksame Kapazität $C_i$ | siehe 15.3.2.6 | siehe 15.3.2.6 |
| innere wirksame Induktivität $L_i$ | siehe 15.3.2.6 | siehe 15.3.2.6 |
| Temperaturklasse | T6 / T5 | T6 / T5 |
| max. Umgebungs-temperatur | 70°C / 85°C | 70°C / 85°C |

*) gilt nur für 1G und 1/2G Anwendung; für 2G Anwendung nicht relevant


Dieses Zertifikat darf nur unverändert weiterverbreitet werden.
Dinnendahlstrasse 9 44809 Bochum Telefon - Phone 0201/172-3947 Telefax-Fax 0201/172-3948
(bis 31.05.2003: Deutsche Montan Technologie GmbH Am Technologiepark 1 45307 Essen)

15.3.2.3 Endschalter Typenreihe 650 *** I/K** **-**

| Typ | 650 *10 *** **-** | 650 *30 *** **-** |
|---|---|---|
| Spannung $U_i$ | AC/DC 60 V | AC/DC 60 V |
| Stromstärke $I_i$ | 3 A | 1 A |
| Leistung $P_i$ | 500 mW ') | 500 mW *) |
| innere wirksame Kapazität $C_i$ | siehe 15.3.2.6 | siehe 15.3.2.6 |
| innere wirksame Induktivität $L_i$ | siehe 15.3.2.6 | siehe 15.3.2.6 |
| Temperaturklasse | T6 / T5 | T6 / T5 |
| max. Umgebungs-temperatur | 70°C / 85°C | 70°C / 85°C |

*) gilt nur für 1G und 1/2G Anwendung; für 2G Anwendung nicht relevant

15.3.2.4 Endschalter Typenreihe 671 *** I/K/G/H** **-**

| Typ | 671 *** *** **-** | 671 *** *** **-** |
|---|---|---|
| Spannung $U_i$ | AC/DC 24 V | AC/DC 24 V |
| Stromstärke $I_i$ (statisch) | 60 mA | 150 mA |
| Stromstärke $I_i$ (dynamisch) | 500 mA für zwei Sekunden | 500 mA für zwei Sekunden |
| innere wirksame Kapazität $C_i$ | siehe 15.3.2.6 | siehe 15.3.2.6 |
| innere wirksame Induktivität $L_i$ | siehe 15.3.2.6 | siehe 15.3.2.6 |
| Leistung $P_i$ | 500 mW | 500 mW |
| Temperaturklasse | T6 / T5 | T6 / T5 |
| max. Umgebungs-temperatur | 70°C / 85°C | 50° C / 70°C |

15.3.2.5 Endschalter Typenreihe 680 0** I/K*0 **-**

| Typ | 680 0** **0 **-** |
|---|---|
| Spannung $U_i$ | DC 16 V |
| Stromstärke $I_i$ | 200 mA |
| Leistung $P_i$ | 500. mW |
| innere wirksame Kapazität $C_i$ | 150 nF + xx nF "xx" siehe 15.3.2.6 |
| innere wirksame Induktivität $L_i$ | siehe 15.3.2.6 |
| Temperaturklasse | T6 / T5 |
| max. Umgebungs-temperatur | 70°C / 85°C |


Dieses Zertifikat darf nur unverändert weiterverbreitet werden.
Dinnendahlstrasse 9 44809 Bochum Telefon - Phone 0201/172-3947 Telefax-Fax 0201/172-3948
(bis 31.05.2003: Deutsche Montan Technologie GmbH Am Technologiepark 1 45307 Essen)

15.3.2.6 wirksame innere Kapazität und Induktivität

| Leitungslänge | ≤ 10 m | ≤ 50 m | ≤ 100 m | ≤ 200 m |
|---|---|---|---|---|
| $C_i$ | 2 nF | 7 nF | 12 nF | 24 nF |
| $L_i$ | 10 µH | 50 µH | 100 µH | 200 µH |

15.3.3 Umgebungstemperaturbereich:
- 25° C ≤ $T_a$ ≤ 70° C (Temperaturklasse T6)
- 25° C ≤ Ta ≤ 85° C (Temperaturklasse T5)
- 25° C ≤ $T_a$ ≤ 50° C / 70° C (Temperaturklasse T6 / T5) *)

*) gilt für Endschalter Typenreihe 671 *** *** **-** bei 60 mA ≤ $I_i$ ≤ 150 mA

(16) Prüfprotokoll
BVS PP 03.2287 EG, Stand 16.12.2003

(17) Besondere Bedingungen für die sichere Anwendung

17.1 Eigensicher betriebene Endschalter mit Kennzeichnung 2G EEx ia IIC T*

17.1.1 Endschalter Typ 671 *** *** **-**

Für die Endschalter gilt bei 60 mA ≤ $I_i$ ≤ 150 mA Temperaturklasse T6 / T5 bei einer maximalen Umgebungstemperatur von +50° C / + 70° C.

17.1.2 Endschalter Typ 620 0** **0 **-**

Die metallische Leitungseinführung am Endschalter muss in den Potentialausgleich mit eingezogen sein.

17.2 Eigensicher betriebene Endschalter mit Kennzeichnung 1/2G EEx ia IIC T*

17.2.1 Endschalter Typ 650 *** *** **-**, Typ 671 *** *** **-**, Typ 680 *** *** **-**

17.2.1.1 Der Einbau des Endschalters in die Wand von Bereichen, die Kategorie 1G Betriebsmittel erfordern, hat so zu erfolgen, dass die Schutzart IP 67 gemäß EN 60529 gewährleistet ist.

17.2.1.2 Der Einbau des Endschalters in die Wand von Bereichen, die Kategorie 1G Betriebsmittel erfordern, hat so zu erfolgen, dass das Gehäuse des Endschalters in den Potentialausgleich mit einbezogen ist.

17.2.1.3 Die technischen Informationen des Herstellers zur Verwendung des Endschalters in Verbindung mit aggressiven / korrosiven Medien und zur Vermeidung von mechanischen Gefährdungen sind zu beachten.

17.2.2 Endschalter Typ 620 *** *** **-**

17.2.2.1 Der Einbau des Endschalters in die Trennwand hat so zu erfolgen, dass die wirksame freie Kunststoffoberfläche in Bereichen, die Kategorie 1G Betriebsmittel erfordern kleiner/gleich 4 $cm^2$ ist. Diese Auflage/Bedingung gilt für Gruppe IIC Anwendungen.

17.2.2.2 Der Einbau des Endschalters in die Trennwand zu Bereichen, die Kategorie 1G Betriebsmittel erfordern, hat so zu erfolgen, dass die metallischen Befestigungsmuttern des Endschalters in den Potentialausgleich mit einbezogen sind.

17.2.2.3 Bei Einbau des Endschalters in die Trennwand zu Bereichen, die Kategorie 1G Betriebsmittel erfordern, dürfen Befestigungsmuttern aus Kunststoff nicht verwendet werden.


Dieses Zertifikat darf nur unverändert weiterverbreitet werden.
Dinnendahlstrasse 9 44809 Bochum Telefon - Phone 0201/172-3947 Telefax-Fax 0201/172-3948
(bis 31.05.2003: Deutsche Montan Technologie GmbH Am Technologiepark 1 45307 Essen)

17.2.2.4 Die technischen Informationen des Herstellers zur Verwendung des Endschalters in Verbindung mit aggressiven Medien und zur Vermeidung von mechanischen Gefährdungen sind zu beachten.

17.2.2.5 Die metallische Leitungseinführung am Endschalter muss in den Potentialausgleich mit einbezogen sein.

17.2.3 Endschalter Typ 671 *** *** **-**

Für die Endschalter gilt bei 60 mA $\leq I_i \leq$ 150 mA Temperaturklasse T6 / T5 bei einer maximalen Umgebungstemperatur von +50° C / + 70° C.

17.3 Eigensicher betriebene Endschalter mit Kennzeichnung 1G EEx ia IIB / IIC T*

17.3.1 Allgemeines

Die Verschraubung / Befestigung des Anschlusskabels in der Wand von Bereichen, die Kategorie 1G Betriebsmittel erfordern, hat so zu erfolgen, dass mindestens die Schutzart IP 67 gemäß EN 60529 gewährleistet ist.

17.3.2 Endschalter Typ 610 *** *** **-** Typ 650 *** *** **-**, Typ 671 *** *** **-**, Typ 680 *** *** **-**

17.3.2.1 Der Einbau des Endschalters hat so zu erfolgen, dass das Gehäuse des Endschalters in den Potentialausgleich mit einbezogen ist.

17.3.2.2 Die technischen Informationen des Herstellers zur Verwendung des Endschalters in Verbindung mit aggressiven / korrosiven Medien und zur Vermeidung von mechanischen Gefährdungen sind zu beachten.

17.3.3 Endschalter Typ 610 *** *** **-**

Die freie Vergussoberfläche muss im eingebauten Zustand von einer leitfähigen Montagefläche abgedeckt sein. Diese Auflage/Bedingung gilt für Ausführungen mit Vergussmasse Micafil Typ Mikares X1087NC weiß; Härter P 978.

17.3.4 Endschalter Typ 620 *** *** **-**

17.3.4.1 Der Einbau des Endschalters hat so zu erfolgen, dass die metallische Leitungseinführung am Endschalter in den Potentialausgleich mit einbezogen ist.

17.3.4.2 Der Einbau des Endschalters hat so zu erfolgen, dass die metallischen Befestigungsmuttern des Endschalters in den Potentialausgleich mit einbezogen sind.

17.3.4.3 Der Endschalters ist nur für Gruppe IIB bzw. IIA geeignet.

17.3.4.4 Die technischen Informationen des Herstellers zur Verwendung des Endschalters in Verbindung mit aggressiven Medien und zur Vermeidung von mechanischen Gefährdungen sind zu beachten.

17.3.5 Endschalter Typ 671 *** *** **-**

Für die Endschalter gilt bei 60 mA $\leq I_i \leq$ 150 mA Temperaturklasse T6 / T5 bei einer maximalen Umgebungstemperatur von +50° C / + 70° C.

17.4 Nicht-eigensicher betriebene Endschalter mit Kennzeichnung 2G EEx m II T*

17.4.1 Allgemeines

17.4.1.1 Die nichtabgeschlossenen freien Leitungsenden des Endschalters Typ 6** *** *** **-** müssen entsprechend den jeweils gültigen Errichtungsbestimmungen angeschlossen sein.


Dieses Zertifikat darf nur unverändert weiterverbreitet werden.
Dinnendahlstrasse 9 44809 Bochum Telefon - Phone 0201/172-3947 Telefax-Fax 0201/172-3948
(bis 31.05.2003: Deutsche Montan Technologie GmbH Am Technologiepark 1 45307 Essen)

17.4.1.2 In dem Stromkreis des Endschalters Typ 6** *** *** **-** muss eine an die Nenndaten des Schaltkontaktes / der Schalt-Elektronik angepasste Sicherung vorhanden sein mit einem Abschaltvermögen, das mindestens dem prospektiven Kurzschlussstrom des versorgenden Netzes am Einsatzort entspricht.

17.4.2 Endschalter Typ 610 *** *** **-**

Die freie Vergussoberfläche muss im eingebauten Zustand von der Montagefläche gegen Lichteinwirkung abgedeckt sein. Diese Auflage/Bedingung gilt für Ausführungen mit Vergussmasse Micafil Typ Mikares X1087NC weiß; Härter P 978.

17.4.3 Endschalter Typ 620 0** **0 **-**

17.4.3.1 Der Endschalter muss gegen mechanische Beanspruchung geschützt installiert werden.

17.4.3.2 Die metallische Leitungseinführung am Endschalter muss in den Potentialausgleich mit einbezogen sein.

17.4.4 Endschalter Typ 671 *** *** **-**

Für den Endschalter gilt bei 60 mA $\leq$ I $\leq$ 150 mA Temperaturklasse T5/T6 bei einer maximalen Umgebungstemperatur von + 50°C / +70° C.

17.5 Nicht-eigensicher betriebene Endschalter mit Kennzeichnung 2D

17.5.1 Allgemeines

17.5.1.1 Die nichtabgeschlossenen freien Leitungsenden des Endschalters Typ 6** *** *** **-** müssen entsprechend den jeweils gültigen Errichtungsbestimmungen angeschlossen sein.

17.5.1.2 Das metallische Gehäuse des Endschalters muss in den Potentialausgleich mit einbezogen sein.

17.5.1.3 In dem Stromkreis des Endschalters Typ 6** *** *** **-** muss eine an die Nenndaten des Schaltkontaktes / der Schalt-Elektronik angepasste Sicherung vorhanden sein mit einem Abschaltvermögen, das mindestens dem prospektiven Kurzschlussstrom des versorgenden Netzes am Einsatzort entspricht.

17.5.2 Endschalter Typ 610 *** *** **-**

17.5.2.1 Die freie Vergussoberfläche muss im eingebauten Zustand von der Montagefläche gegen Lichteinwirkung abgedeckt sein. Diese Auflage/Bedingung gilt für Ausführungen mit Vergussmasse Micafil Typ Mikares X1087NC weiß; Härter P 978.

17.5.3 Endschalter Typ 620 0** **0 **-**

17.5.3.1 Der Endschalter muss gegen mechanische Beanspruchung geschützt installiert werden.

17.5.3.2 Die metallischen Befestigungsmuttern des Endschalters müssen in den Potentialausgleich mit einbezogen sein


Dieses Zertifikat darf nur unverändert weiterverbreitet werden.
Dinnendahlstrasse 9 44809 Bochum Telefon - Phone 0201/172-3947 Telefax-Fax 0201/172-3948
(bis 31.05.2003: Deutsche Montan Technologie GmbH Am Technologiepark 1 45307 Essen)

**NetterVibration**

**Declaration of conformity for**
**NTP B E**
**Doc.-No. NV 2004 001 X**

06.04.2006

CE

## Declaration of conformity
## in compliance with ATEX Directive 94/9/EC

We herewith confirm that the pneumatic piston vibrators

**Series NTP B E**

are in compliance with the following regulations:

**94/9/EC**
**98/37/EC**

Used harmonised standards:

**DIN EN ISO 12100-1,**
**DIN EN ISO 12100-2,**
**EN 1127-1 and**
**EN 13463-1**

The sign X placed after the certificate number indicates that the equipment is subject to special conditions for safe use specified in the enclosure to this certificate.

The marking of the pneumatic piston vibrators includes additionally:

Ex II 2 G D 135°C (T4)

**NetterVibration**

i.A. A. Werkmann
(quality manager)

*Serving industry with vibration*


**Netter GmbH**
www.NetterVibration.com

**Germany**
Fritz-Ullmann-Straße 9
55252 Mainz-Kastel

Tel. +49 6134 2901-0
Fax +49 6134 2901-33

**United Kingdom**
92A Littleworth Road
Hednesford Cannock
WS12 5PA
Tel. +44 1543 424990
Fax +44 1543 423196

**Switzerland**
Erlenweg 4
4310 Rheinfelden

Tel. +41 61 8316200
Fax +41 61 8311291

**NetterVibration**

**Annex to the declaration of conformity**
**NTP B E**
**Doc.-No. NV 2004 001 X**

06.04.2006

CE Ex

## Annex to the declaration of conformity NTP B E

**Description:**
The pneumatic piston vibrators series NTB B E generate linear vibrations. The basic version B vibrator with base-plate, the piston strikes against a cushion of air. In version B + C an impact plate (elastomer plate) is inserted in the base plate, which creates a rubber hammer effect.

The body may be of hard coated aluminium , cast iron or stainless steel depending on the type of NTP B E whereas the pistons are made either of steel or bronze. The drive medium can be either clean (filtered), lubricated compressed air or lubricated nitrogen.

**Markings:**
Netter Vibration, address ...
type: ... (according version)
min. - max. - ambient temperature: .....(according version)
serial number
year
Ex II 2 G D 135°C (T4)
documentation number: NV 2004 001 X

**Technical documentation:**
No. NV 2004 001

**Special conditions for safe use:**
- The pneumatic piston vibrator has to be fixed with the supplied safety washers. The safe fixing has to be checked regularly.
- In zones with explosive gas (zone 1) the exhaust air must be safely piped away, except special designs with bronze piston.
- The version NTP B+C E may only be operated in timed mode.

***Netter**Vibration*

i.A. A. Werkmann
(quality manager)

*Serving industry with vibration*


**Netter GmbH**
www.*Netter*Vibration.com

**Germany**
Fritz-Ullmann-Straße 9
55252 Mainz-Kastel
Tel. +49 6134 2901-0
Fax +49 6134 2901-33

**United Kingdom**
92A Littleworth Road
Hednesford Cannock
WS12 5PA
Tel. +44 1543 424990
Fax +44 1543 423196

**Switzerland**
Erlenweg 4
4310 Rheinfelden
Tel. +41 61 8316200
Fax +41 61 8311291

# EC-TYPE EXAMINATION CERTIFICATE

1

2 **Equipment or Protective System Intended for use in Potentially explosive atmospheres Directive 94/9/EC**

3 EC-Type Examination Certificate Number : **BAS98ATEX2168X**

4 Equipment or Protective System: **A TYPE EM6 SOLENOID**

5 Manufacturer: **ASCO JOUCOMATIC LTD**

6 Address: **2 Pit Hey Place, West Pimbo, Skelmersdale, Lancashire, WN8 9PG**

7 This equipment or protective system and any acceptable variation thereto is specified in the schedule to this certificate and the documents therein referred to.

8 The Electrical Equipment Certification Service, notified body number 600 in accordance with Article 9 of the Council Directive 94/9/EC of 23 March 1994, certifies that this equipment or protective system has been found to comply with the Essential Health and Safety Requirements relating to the design and construction of equipment and protective systems intended for use in potentially explosive atmospheres given in Annex II to the Directive.

The examination and test results are recorded in confidential Report N°

**98(C)0433 dated 6 July 1998**

9 Compliance with the Essential Health and Safety Requirements has been assured by compliance with:

**EN50 014: 1997** **PAS 022: 1997** **EN50 028: 1987**

except in respect of those requirements listed at item 18 of the Schedule.

10 If the sign **"X"** is placed after the certificate number, it indicates that the equipment or protective system is subject to special conditions for safe use specified in the schedule to this certificate.

11 This EC-TYPE EXAMINATION CERTIFICATE relates only to the design and construction of the specified equipment or protective system. If applicable, further requirements of this Directive apply to the manufacture and supply of this equipment or protective system.

12 The marking of the equipment or protective system shall include the following:-

**II 2 G** **EEx m II T3** **Ambient range -40°C to +40°C See Schedule**

This certificate may only be reproduced in its entirety and without any change, schedule included.

File No: EECS 0080/03/007

This certificate is granted subject to the general conditions of the Electrical Equipment Certification Service. It does not necessarily indicate that the apparatus may be used in particular industries or circumstances.

I M CLEARE
DIRECTOR
8 July 1998

HSE Health & Safety Executive

**Electrical Equipment Certification Service**
Health and Safety Executive
Harpur Hill, Buxton, Derbyshire. SK17 9JN. United Kingdom
Tel: 01298 28000 Fax: 01298 28244

13 **Schedule**

14 **EC-TYPE EXAMINATION CERTIFICATE N° BAS98ATEX2168X**

15 **Description of Equipment or Protective System**

**A Type EM6 Solenoid** comprises a coil of polyurethane/polyamide enamelled copper wire wound on a polyphenylene sulphide bobbin. The coil is mounted within a mild steel yoke assembly. The electrical supply to the solenoid is via an integral cable supported by a cable gland mounted on the yoke assembly.

The cable has an earth conductor that is terminated on the yoke assembly using a ring terminal and rivet or screw. A barrier pad of 'Nomex' paper is wrapped round the coil to provide electrical insulation to the other cable conductors, one of which is wrapped and soldered to one end of a thermal fuse device with opening temperature 164°C or 165 ± 3°C. The other end of the thermal fuse is connected to the coil with the joints being soldered and wrapped.

The whole assembly is encapsulated in Hysol Type MH6-0504 mineral filled glass fibre reinforced epoxy moulding compound.

The solenoids are designed for various voltages and wattages selected from the range listed below:-

| Watts | Voltage | Max. ambient °C | T Class |
|---|---|---|---|
| up to 3.55W | up to 440V a.c. 50/60 Hz | 65 | T3 |
| 3.55W-9W | up to 440V a.c. 50/60 Hz | 65 | T3 |
| up to 9.7W | up to 240V d.c | 40 | T5 |
| | | 65 | T4 |
| 9.7W-15.3W | up to 240V d.c. | 40 | T4 |

**VARIATION ONE**

An increase in dimensions to form the EMXX solenoids which are selected from the range listed below:

| Watts | Voltage | Max. ambient °C | T Class |
|---|---|---|---|
| up to 4.05W | up to 440V a.c. | 65 | T3 |
| 4.05W-9.25W | up to 440V a.c. | 65 | T3 |
| up to 11.2W | up to 240V d.c | 65 | T4 |
| 11.2W-19.7W | up to 240V d.c. | 40 | T4 |

13 **Schedule**

14 **EC-TYPE EXAMINATION CERTIFICATE N° BAS98ATEX2168X**

**VARIATION TWO**

A reduction in overall dimensions to form the EM5 solenoids which are selected from the range listed below:

| Watts | Voltage | Max. ambient °C | T Class |
|---|---|---|---|
| up to 2.5W | up to 440V a.c. | 40 | T4 |
| 2.5W-4W | up to 440V a.c. | 65 | T3 |
| 4W-10W | up to 440V d.c | 40 | T3 |
| up to 3.5W | up to 240V d.c. | 40 | T5 |
| up to 3.5W | up to 240V d.c. | 60 | T4 |
| 3.5W-6.9W | up to 240V d.c. | 40 | T3 |
| 6.9W-22.0W | up to 240V d.c. | 40 | T3 |

16 **Report Nos.**

98(C)0433 dated 6 July 1998

17 **Special Conditions For Safe Use**

1. The solenoid shall be connected to a supply protected by fuses capable of interrupting a prospective short circuit current of 4000A.

2. Solenoids with normally be supplied with an electrostatic warning label. However, for operators specifically used within petrol pump dispenser enclosures no label is fitted.

3. For solenoid operators fitted to valves used in vapour recovery systems where a Zone 0 exists within the valve and pipework, the solenoid operators or valves fitted with solenoid operators must be subject to the routine test in accordance with PAS 022: 1997 Clause 4.8 Annex 1 using air as test media and a test pressure of 15 bar (+0.1), (-0). The pipework is limited to a maximum diameter of 15mm with pipe runs not exceeding 3m in length.

4. The integral cable shall be suitably terminated when installed.

13 **Schedule**

14 **EC-TYPE EXAMINATION CERTIFICATE N° BAS98ATEX2168X**

18 **Essential Health and Safety Requirements**

| Essential Health & Safety Requirements not covered by Standards listed at (9) | | |
|---|---|---|
| **ESR** | **Subject** | **Compliance: Report clause** |
| 1.0.4 | Surrounding area conditions | 4.1.1.0.4 |
| 1.0.6 | Instructions | 4.1.1.0.6 |
| 1.1.2 | Constructional materials not to degrade | 4.1.1.1.2 |
| 1.3.4 | Frictional overheating | 4.1.1.3.4 |
| 1.4.2 | Attack by aggressive substances | 4.1.1.4.2 |

19 **DRAWINGS**

| Number | Sheet | Issue | Date | Description |
|---|---|---|---|---|
| HV 118611 | | R | 25.6.98 | EM6 coil detail |
| HVA 118466 | | H | 29.6.98 | EM6 general assembly |
| HVA 118231 | | H | 24.6.98 | EMXX general assembly |
| HV 118610 | | Q | 25.6.98 | EMXX coil detail |
| HVA 129657 | | F | 25.6.98 | EM5 coil detail |
| HVA 129682 | | D | 25.6.98 | EM5 general arrangement |
| *FV 122459 | | F | 1.7.98 | Cable insert |
| *FV-129491 | | C | 1.7.98 | Thermal fuse |
| *FV-122289 | | C | 1.7.98 | Thermal fuse |
| *GV-108864 | | S | 26.6.98 | Cable |
| GV-142270 | | - | 13.5.98 | EM5 label (Approval) |
| GV-142271 | | - | 13.5.98 | EM6 and EMXX label (Approval) |
| *FV-135845 | | - | 1.7.98 | Cable insert |
| *GV-135003 | | B | 1.7.98 | EM5 label (valve information) |
| GV-129131 | | A | 1.7.98 | EM6 and EMXX label (valve information) |
| *GV-135004 | | B | 1.7.98 | Warning label |

* Drawings common to BAS98ATEX2167X

This certificate may only be reproduced in its entirety and without any change, schedule included.

**BASEEFA** List Keywords

2SOLENOI

1 # SUPPLEMENTARY EC-TYPE EXAMINATION CERTIFICATE

2 **Equipment or Protective System Intended for use in Potentially explosive atmospheres Directive 94/9/EC**

3 Supplementary EC-Type Examination Certificate Number: **BAS98ATEX2168X/1**

4 Equipment or Protective System: **A TYPE EM6 SOLENOID**

5 Manufacturer: **ASCO JOUCOMATIC LTD**

6 Address: **Pit Hey Place, West Pimbo, Skelmersdale, Lancashire, WN8 9PG**

7 This supplementary certificate extends EC-Type Examination Certificate No. BAS98ATEX2168X to apply to equipment or protective systems designed and constructed in accordance with the specification set out in the Schedule of the said Certificate but having any variations specified in the Schedule attached to this certificate and the documents therein referred to.

This Supplementary Certificate shall be held with the original Certificate.

This certificate may only be reproduced in its entirety and without any change, schedule included.

File No: EECS 0080/03/007

This certificate is granted subject to the general conditions of the Electrical Equipment Certification Service. It does not necessarily indicate that the apparatus may be used in particular industries or circumstances.

I M CLEARE
DIRECTOR
17 December 1998

HSE
Health & Safety Executive

**Electrical Equipment Certification Service**
Health and Safety Executive
Harpur Hill, Buxton, Derbyshire. SK17 9JN. United Kingdom
Tel: 01298 28000 Fax: 01298 28244

# Schedule

**SUPPLEMENTARY EC-TYPE EXAMINATION CERTIFICATE N° BAS98ATEX2168X/1**

**Description of the Variation to the Equipment or Protective System**

**VARIATION ONE**

To permit modifications to the label and cable cut back dimensions which do not affect certification.

To record an increase in maximum permitted ambient for the EM5 10W solenoids as follows:-

| Watts | Voltage | Maximum ambient | T Class |
|---|---|---|---|
| up to 10W | up to 440V 50/60 Hz | 65°C | T3 |

**Report Nos.**

Assessment in 98(C)0883 refers.

**Special Conditions For Safe Use**

As for the original schedule.

**Essential Health and Safety Requirements**

See original certificate.

**DRAWINGS**

| Number | Issue | Date | Description |
|---|---|---|---|
| HVA-129682 | E | 30.9.98 | EM5 Assembly |
| GV-108864* | T | 6.10.98 | Cable specification |
| GV-142270 | A | 30.9.98 | Nameplate |

*Drawing common to BAS98ATEX2167X

This certificate may only be reproduced in its entirety and without any change, schedule included.

1 # SUPPLEMENTARY EC-TYPE EXAMINATION CERTIFICATE

2 **Equipment or Protective System Intended for use in Potentially explosive atmospheres Directive 94/9/EC**

3 Supplementary EC-Type Examination Certificate Number: **BAS98ATEX2168X/2**

4 Equipment or Protective System: **A TYPE EM6 SOLENOID**

5 Manufacturer: **ASCO JOUCOMATIC LIMITED**

6 Address: **Skelmersdale, Lancashire, WN8 9PG**

7 This supplementary certificate extends EC-Type Examination Certificate No. BAS98ATEX2168X to apply to equipment or protective systems designed and constructed in accordance with the specification set out in the Schedule of the said Certificate but having any variations specified in the Schedule attached to this certificate and the documents therein referred to.

This Supplementary Certificate shall be held with the original Certificate.

This certificate may only be reproduced in its entirety and without any change, schedule included.

File No: EECS 0080/03/007

BASEEFA Report No. 99(C)0071 dated 7 July 1999

This certificate is granted subject to the general conditions of the Electrical Equipment Certification Service. It does not necessarily indicate that the apparatus may be used in particular industries or circumstances.

I M CLEARE
DIRECTOR
17 August 1999

HSE Health & Safety Executive

**Electrical Equipment Certification Service**
Health and Safety Executive
Harpur Hill, Buxton, Derbyshire. SK17 9JN. United Kingdom
Tel: 01298 28000 Fax: 01298 28244

13 **Schedule**

14 **EC-TYPE EXAMINATION CERTIFICATE N° BAS98ATEX2168X/2**

**Description of the Variation to the Equipment or Protective System**

**VARIATION ONE**

Allows for a small printed circuit board to be introduced to simplify assembly of the cable and thermal fuse to the solenoid coil. An alternative and simplified cable insert is incorporated in the design. An optional suppression diode is introduced which, when used, results in a T3 temperature class for the coil.

**VARIATION TWO**

Allows for the addition of alternative cable supplier, APEX Cables Limited, cable types 30753HT and 30754HT.

**Report Nos.**

99(C)0071

**SPECIAL CONDITIONS FOR SAFE USE**

As for the original certificate

**Essential Health and Safety Requirements**

See original certificate.

**DRAWINGS**

| Number | Issue | Date | Description |
|---|---|---|---|
| JVA-129657 | G | 18-11-98 | Coil/Cable assembly for EM5 |
| HV-118610 | R | 19-1-99 | Coil/Cable assembly for EMXX |
| HV-118611 | S | 19-1-99 | Coil/Cable assembly for EM6 |
| GV-108864 | V | 14-4-99 | Cable cutback details |
| HVA-118466 | J | 2-7-99 | General assembly EM6 |
| HVA-118231 | J | 2-7-99 | General assembly EMXX |

This certificate may only be reproduced in its entirety and without any change, schedule included.

1 # SUPPLEMENTARY EC-TYPE EXAMINATION CERTIFICATE

2 **Equipment or Protective System Intended for use in Potentially explosive atmospheres Directive 94/9/EC**

3 Supplementary EC-Type Examination Certificate Number: **BAS98ATEX2168X/3**

4 Equipment or Protective System: **A TYPE EM6 SOLENOID**

5 Manufacturer: **ASCO JOUCOMATIC LIMITED**

6 Address: **Skelmersdale, Lancashire, WN8 9PG**

7 This supplementary certificate extends EC-Type Examination Certificate No. BAS98ATEX2168X to apply to equipment or protective systems designed and constructed in accordance with the specification set out in the Schedule of the said Certificate but having any variations specified in the Schedule attached to this certificate and the documents therein referred to.

This Supplementary Certificate shall be held with the original Certificate.

This certificate may only be reproduced in its entirety and without any change, schedule included.

File No: EECS 0080/03/007

This certificate is granted subject to the general conditions of the Electrical Equipment Certification Service. It does not necessarily indicate that the apparatus may be used in particular industries or circumstances.

I M CLEARE
DIRECTOR
20 July 2000

HSE
Health & Safety Executive

**Electrical Equipment Certification Service**
Health and Safety Executive
Harpur Hill, Buxton, Derbyshire. SK17 9JN. United Kingdom
Tel: 01298 28000 Fax: 01298 28244

13 **Schedule**

14 **SUPPLEMENTARY EC-TYPE EXAMINATION CERTIFICATE Nº BAS98ATEX2168X/3**

**Description of the Variation to the Equipment or Protective System**

**VARIATION ONE**

Allows for the addition to the range of EMXX solenoids of a unit rated at up to 1.7W and up to 240V d.c. This arrangement has a T6 rating at a maximum ambient of 65°C.

**VARIATION TWO**

Allows for the use of alternative cable entry inserts as defined on the drawings for the EM5, EM6 and EMXX solenoids; it also allows for the use of an optional heat shrink sleeve covering the cable sheath/cable insert joint.

**VARIATION THREE**

Allows for the addition of a suppression diode on the types EM5 and EMXX which is added to the printed circuit board already included. When the diode option is used the temperature class for all units is limited to T3.

**VARIATION FOUR**

Allows for the addition of an alternative cable supplier Concordia for items 1 and 5, the 3 core and 4 core cables but with identical specification and the removal of detailed cut back dimensions from the certification documents.

**VARIATION FIVE**

The removal of drawings GV-135003 issue B and GV-129131 issue A from the schedule of the certificate. These drawings deal with label details for the valve itself. These drawings become certificate related drawings.

**VARIATION SIX**

Allows for the fitting of a modified combined certification label.

**Report No.**

None.

**Special Conditions For Safe Use**

As for the original certificate.

**Essential Health and Safety Requirements**

See original certificate.

13 **Schedule**

14 **SUPPLEMENTARY EC-TYPE EXAMINATION CERTIFICATE N° BAS98ATEX2168X/3**

**DRAWINGS**

| Number | Issue | Date | Description |
|---|---|---|---|
| JVA-129657 | H | 2-7-99 | Coil/cable assembly EM5 |
| HVA 129682 | F | 5-11-99 | General Assembly EM5 |
| JV-118610 | S | 12-05-99 | Coil/cable assembly EMXX |
| JVA-118231 | K | 7-2-99 | General Assembly EMXX |
| HV-118611 | T | 2-7-99 | Coil/cable assembly EM6 |
| *GV-108864 | W | 08-10-99 | Cable specification |
| GV-142703 | - | 3-11-99 | Combined label |

*This drawing is common to BAS98ATEX2167X

This certificate may only be reproduced in its entirety and without any change, schedule included.

1 # SUPPLEMENTARY EC-TYPE EXAMINATION CERTIFICATE

2 **Equipment or Protective System Intended for use in Potentially explosive atmospheres Directive 94/9/EC**

3 Supplementary EC-Type Examination Certificate Number: **BAS98ATEX2168X/4**

4 Equipment or Protective System: **A TYPE EM6 SOLENOID**

5 Manufacturer: **ASCO JOUCOMATIC LIMITED**

6 Address: **Skelmersdale, Lancashire, WN8 9PG**

7 This supplementary certificate extends EC-Type Examination Certificate No. BAS98ATEX2168X to apply to equipment or protective systems designed and constructed in accordance with the specification set out in the Schedule of the said Certificate but having any variations specified in the Schedule attached to this certificate and the documents therein referred to.

This Supplementary Certificate shall be held with the original Certificate.

This certificate may only be reproduced in its entirety and without any change, schedule included.

File No: EECS 0080/03/007

This certificate is granted subject to the general conditions of the Electrical Equipment Certification Service. It does not necessarily indicate that the apparatus may be used in particular industries or circumstances.

I M CLEARE
DIRECTOR
28 September 2000

HSE
Health & Safety Executive

**Electrical Equipment Certification Service**
Health and Safety Executive
Harpur Hill, Buxton, Derbyshire. SK17 9JN. United Kingdom
Tel: 01298 28000 Fax: 01298 28244

13 **Schedule**

14 **SUPPLEMENTARY EC-TYPE EXAMINATION CERTIFICATE N° BAS98ATEX2168X/4**

**Description of the Variation to the Equipment or Protective System**

**VARIATION ONE**

To allow the use of an alternative cable entry insert resulting in an increase in width of the coil assembly.

**Report No.**

None

**Special Conditions For Safe Use**

As for the original certificate.

**Essential Health and Safety Requirements**

See original certificate.

**DRAWINGS**

| Number | Issue | Date | Description |
|---|---|---|---|
| JVA-129657 | J | 2-8-00 | Coil/cable assembly EM5 |
| HVA 129682 | G | 2-8-00 | General Assembly EM5 |
| JV-118610 | T | 2-8-00 | Coil/cable assembly EMXX |
| JVA-118231 | L | 3-8-00 | General Assembly EMXX |
| HV-118611 | U | 2-8-00 | Coil/cable assembly EM6 |
| HVA-118466 | K | 3-8-00 | EM6 encapsulation |

This certificate may only be reproduced in its entirety and without any change, schedule included.

1 # SUPPLEMENTARY EC-TYPE EXAMINATION CERTIFICATE

2 **Equipment or Protective System Intended for use in Potentially explosive atmospheres Directive 94/9/EC**

3 Supplementary EC-Type Examination Certificate Number: **BAS98ATEX2168X/5**

4 Equipment or Protective System: **A TYPE EM6 SOLENOID**

5 Manufacturer: **ASCO JOUCOMATIC LIMITED**

6 Address: **Skelmersdale, Lancashire, WN8 9PG**

7 This supplementary certificate extends EC-Type Examination Certificate No. BAS98ATEX2168X to apply to equipment or protective systems designed and constructed in accordance with the specification set out in the Schedule of the said Certificate but having any variations specified in the Schedule attached to this certificate and the documents therein referred to.

This Supplementary Certificate shall be held with the original Certificate.

This certificate may only be reproduced in its entirety and without any change, schedule included.

File No: EECS 0080/03/007

This certificate is granted subject to the general conditions of the Electrical Equipment Certification Service. It does not necessarily indicate that the apparatus may be used in particular industries or circumstances.

HSE Health & Safety Executive

**Electrical Equipment Certification Service**
**Health and Safety Executive**
**Harpur Hill, Buxton, Derbyshire, SK17 9JN, United Kingdom**
**Tel: +44(0)1298 28000 Fax: +44(0)1298 28244**
**internet: www.baseefa.com e-mail: baseefa.info.eecs@hsl.gov.uk**

I M CLEARE
DIRECTOR
3 July 2001

13 **Schedule**

14 **SUPPLEMENTARY EC-TYPE EXAMINATION CERTIFICATE N° BAS98ATEX2168X/5**

**Description of the Variation to the Equipment or Protective System**

**VARIATION 5.1**

To allow the use of an alternative cable supplier.

**VARIATION 5.2**

To allow an increase in operating power from 9.25W to 10.5W on the EMXX model.

**Report No.**

01(C)0301

**Special Conditions For Safe Use**

As for the original certificate.

**Essential Health and Safety Requirements**

See original certificate.

**DRAWINGS**

| Number | Issue | Date | Description |
|---|---|---|---|
| JV-118610 | U | 18-6-01 | Coil/cable assembly EMXX |
| GV-145064 | | 14-2-01 | PVC cable |

This certificate may only be reproduced in its entirety and without any change, schedule included.

sira
Certification Service

Doc No: 38838-2

# EC TYPE-EXAMINATION CERTIFICATE VARIATION

| | | | |
|---|---|---|---|
| **CERTIFICATE NUMBER** | BAS98ATEX2168X | Dated | 8 July 1998 |
| **SIRA VARIATION NUMBER** | 1 (ONE) | Dated | 3 January 2003 |

## VARIATION TO EQUIPMENT

To permit:

1 The standard EN 50281-1-1:1999 to be included in section 9 that lists the documents used to ensure compliance with the Essential Health and Safety requirements; in consequence the label will include the following marking required by Directive 94/9/EC to show that the equipment is suitable for use in the presence of combustible dust:

II 2 D (TXXX°C) – where XXX is equal to the maximum surface temperature permitted by the temperature class

2 The flying lead to be obtained from an alternative supplier.

## DESCRIPTIVE DOCUMENTS - 1

| Number | Sheet | Rev | Date | Description |
|---|---|---|---|---|
| HVA 118466 | 1 of 1 | L | 21 Jan 02 | Type EM6 solenoid operator |
| HVA 129682 | 1 of 1 | H | 21 Jan 02 | Type EM5 solenoid operator |
| JVA 118231 | 1 of 1 | M | 21 Jan 02 | Type EMXX solenoid operator |

## DESCRIPTIVE DOCUMENTS – 2

| Number | Sheet | Rev | Date | Description |
|---|---|---|---|---|
| GV 108864 | 1 of 1 | X | 08 Oct 02 | Cable |

## ADDITIONAL CONDITIONS OF CERTIFICATION

None

**File No** 52A9530

**Report No.** R52A9530A

C Ellaby
Certification Officer

This Variation and its schedules may only be reproduced in its entirety and without change



Sira Certification Service
Rake Lane, Eccleston, Chester, CH4 9JN, England
Tel: +44 (0) 1244 670900 Fax: +44 (0) 1244 681330
Email: exhazard@siratc.co.uk
Sira Certification Service is a service of Sira Test & Certification Ltd

sira
Certification Service

# EC TYPE-EXAMINATION CERTIFICATE VARIATION

| | | | |
|---|---|---|---|
| **CERTIFICATE NUMBER** | BAS98ATEX2168X | Dated | 8 July 1998 |
| **SIRA VARIATION NUMBER** | 2 (TWO) | Dated | 15 May 2003 |

**VARIATION TO EQUIPMENT**

To permit:

1 The introduction of an alternative construction that does not have an earth washer; the earth is provided by a spring clip that forces the coil/cable assembly onto the solenoid operator bonnet.

**DESCRIPTIVE DOCUMENTS**

| Number | Sheet | Rev | Date | Description |
|---|---|---|---|---|
| 118231 | 1 of 1 | N | 10 Jan 03 | EMXX Solenoid Operator General Arrangement |

**ADDITIONAL CONDITIONS OF CERTIFICATION**

None

**File No** 53V9882

**Report No.** NA

**C Ellaby**
**Certification Officer**

This Variation and its schedules may only be reproduced in its entirety and without change

**Sira Certification Service**
Rake Lane, Eccleston, Chester, CH4 9JN, England
Tel: +44 (0) 1244 670900 Fax: +44 (0) 1244 681330
Email: exhazard@siratc.co.uk
Sira Certification Service is a service of Sira Test & Certification Ltd

sira
Certification Service

# EC TYPE-EXAMINATION CERTIFICATE VARIATION

| | | | |
|---|---|---|---|
| **CERTIFICATE NUMBER** | BAS98ATEX2168X | Dated | 8 July 1998 |
| **SIRA VARIATION NUMBER** | 3 (THREE) | Dated | 10 February 2004 |

## VARIATION TO EQUIPMENT

To permit:

1 An increase in size of the outer encapsulant moulding around the cable entry on the EM5, EMXX and EM5X solenoids to provide greater strength at this point.

2 Alternative coil fixing arrangements on the EM5 solenoid.

3 The use of revised nameplates.

4 Addition to the range of solenoids with loose conductor supply leads.

5 Minor drawing changes.

## DESCRIPTIVE DOCUMENTS

| Number | Sheet | Rev | Date | Description |
|---|---|---|---|---|
| HVA 129682 | 1 of 1 | J | 07 July 03 | General Assembly EM5 |
| 118231 | 1 of 1 | P | 10 Jan 03 | General Assembly EMXX |
| JVA 129657 | 1 of 1 | K | 11 July 03 | Coil/Cable Assembly EM5 |
| JV 118610 | 1 of 1 | V | 10 July 03 | Coil/Cable Assembly EMXX |
| GV 145969 | 1 of 1 | - | 29 Dec 03 | Conductor (Lead Wire) |

## CONDITIONS OF CERTIFICATION

1 An electric strength test in accordance with clause 7.2 of EN 50 028:1987 shall be carried out at 1000V + 2Un, or 1500V, which ever is the greater, for 60 seconds on the encapsulated solenoid. Alternatively, if this test voltage is multiplied by 1.2 times, it may be applied for between 3 to 5 seconds. The exposed metal surface of the solenoid shall be connected to earth. The voltage shall be applied between the coil circuit joined together and earth.

## ADDITIONAL SPECIAL CONDITIONS FOR SAFE USE

5 The loose supply conductors are to be suitably protected from mechanical damage.

**D R Stubbings**
**Certification Manager**

**File No** 53V10570

**Report No.** R53V10570A

This Variation and its schedules may only be reproduced in its entirety and without change



**Sira Certification Service**
Rake Lane, Eccleston, Chester, CH4 9JN, England
Tel: +44 (0) 1244 670900 Fax: +44 (0) 1244 681330
Email: exhazard@siratc.co.uk
Sira Certification Service is a service of Sira Test & Certification Ltd

sira
Certification Service

# EC TYPE-EXAMINATION CERTIFICATE VARIATION

| | | | |
|---|---|---|---|
| **CERTIFICATE NUMBER** | BAS98ATEX2168X | Dated | 8 July 1998 |
| **SIRA VARIATION NUMBER** | 4 (FOUR) | Dated | 30 June 2004 |

**VARIATION TO EQUIPMENT**

To include:

1 An alternative EM5 a.c. solenoid with the following rating:

| Nominal watts (W) | Ambient temperature range | Max fluid temp. | Temperature class | Surface temperature |
|---|---|---|---|---|
| ≤5 a.c. | -40°C to +60°C | 90°C | T4 | 135°C |

2 An additional temperature class and maximum ambient for the EMXX solenoid:

| Nominal watts (W) | Ambient temperature range | Max fluid temp. | Temperature class | Surface temperature |
|---|---|---|---|---|
| ≤19.7 d.c. | -40°C to +70°C | 90°C | T3 | 200°C |

3 Additional electrical insulation.

**DESCRIPTIVE DOCUMENTS**

| Number | Sheet | Rev | Date | Description |
|---|---|---|---|---|
| HVA129682 | 1 of 1 | K | 16 Mar 03 | Type EM5 Encapsulation 'm' solenoid |
| 118231 | 1 of 1 | R | 16 Jun 04 | Type EMXX Encapsulation 'm' solenoid |
| JV118610 | 1 of 1 | W | 24 Jun 04 | Coil / Cable assembly for EMXX operator |

**File No** 52A11750

**Report No.** R52A11750A

**D R Stubbings**
**Certification Manager**

This Variation and its schedules may only be reproduced in its entirety and without change



**Sira Certification Service**
Rake Lane, Eccleston, Chester, CH4 9JN, England
Tel: +44 (0) 1244 670900 Fax: +44 (0) 1244 681330
Email: exhazard@siratc.co.uk
Sira Certification Service is a service of Sira Test & Certification Ltd

# EC TYPE-EXAMINATION CERTIFICATE VARIATION

| | | | |
|---|---|---|---|
| **CERTIFICATE NUMBER** | BAS98ATEX2168X | Dated | 8 July 1998 |
| **SIRA VARIATION NUMBER** | 5 (FIVE) | Dated | 13 September 2004 |

**VARIATION TO EQUIPMENT**

To permit:

1 The use of alternative types of flying leads.

**DESCRIPTIVE DOCUMENTS**

| Number | Sheet | Rev | Date | Description |
|---|---|---|---|---|
| 284582 | 1 of 1 | - | 25 Aug 04 | 3 and 4 core cable for EEx m solenoid operators |

**ADDITIONAL CONDITIONS OF CERTIFICATION**

None

**File No.** 51V12405

**Report No.** R51V12405A

**C Ellaby**
**Certification Officer**

This Variation and its schedules may only be reproduced in its entirety and without change



**Sira Certification Service**
Rake Lane, Eccleston, Chester, CH4 9JN, England
Tel: +44 (0) 1244 670900 Fax: +44 (0) 1244 681330
Email: exhazard@siratc.co.uk
Sira Certification Service is a service of Sira Test & Certification Ltd

# EC TYPE-EXAMINATION CERTIFICATE VARIATION

| | | | |
|---|---|---|---|
| **CERTIFICATE NUMBER** | BAS98ATEX2168X | Dated | 8 July 1998 |
| **SIRA VARIATION NUMBER** | 6 (SIX) | Dated | 16 September 2005 |

**VARIATION TO EQUIPMENT**

To permit:

1 The use of an alternative cable supplier and the amendment of drawing note 3 to clarify the alternative cable outer sheath colours.

**DESCRIPTIVE DOCUMENTS**

| Number | Sheet | Rev | Date (Sira Stamp) | Description |
|---|---|---|---|---|
| 284582 | 1 of 1 | A | 08 Sep 05 | 3 and 4 core cable for EEx m solenoid operators |

**ADDITIONAL CONDITIONS OF CERTIFICATION**

None

**File No.** 51A13905

**Report No.** R51A13905A

**C Ellaby**
**Certification Officer**

This Variation and its schedules may only be reproduced in its entirety and without change





**Sira Certification Service**
Rake Lane, Eccleston, Chester, CH4 9JN, England
Tel: +44 (0)1244 670900 Fax: +44 (0)1244 681330
Email: exhazard@sira.co.uk
Sira Certification Service is a service of Sira Test & Certification Ltd

1 **EC TYPE-EXAMINATION CERTIFICATE**

2 Equipment intended for use in Potentially Explosive Atmospheres Directive 94/9/EC

3 Certificate Number: BAS98ATEX2168X

4 Equipment: EMXX and EM5 Solenoids

5 Applicant: ASCO JOUCOMATIC Limited

6 Address: 2 Pit Hey Place
West Pimbo
Skelmersdale
Lancashire
WN8 9PG
(For other manufacturing sites, see certificate schedule)

7 This equipment and any acceptable variation thereto is specified in the schedule to this certificate and the documents therein referred to.

8 Sira Certification Service, notified body number 0518 in accordance with Article 9 of Directive 94/9/EC of 23 March 1994, certifies that this equipment has been found to comply with the Essential Health and Safety Requirements relating to the design and construction of equipment intended for use in potentially explosive atmospheres given in Annex II to the Directive.

The examination and test results are recorded in confidential report numbers BASEEFA 98(C)0433, BASEEFA 98(C)0883, BASEEFA 99(C)0071,BASEEFA 99(T)0455, BASEEFA 01(C)0301, ST&C report number R52A9530A, R53V9882, R53V10570A, R52A11750A, R51V12405A, R51A13905A, R51A14805A, R51A15527A, R51L15207B and R51E16205A.

9 Compliance with the Essential Health and Safety Requirements, with the exception of those listed in the schedule to this certificate, has been assured by compliance with the following documents:

| | |
|---|---|
| EN 60079-0:2006 | EN 61241-18:2004 |
| EN 60079-18:2004 | EN 13617 -18:2004 |
| EN 61241-0:2006 | PAS 022:1997 |

10 If the sign 'X' is placed after the certificate number, it indicates that the equipment is subject to special conditions for safe use specified in the schedule to this certificate.

11 This EC type-examination certificate relates only to the design and construction of the specified equipment. If applicable, further requirements of this Directive apply to the manufacture and supply of this equipment.

12 The marking of the equipment shall include the following:

II 2 GD
Ex mb II Tx Ta –40°C to +yy°C
Ex mD 21 IP67 Tz°C

Where: x is the assigned temperature class
yy is the maximum ambient temperature range
z is equal to the maximum surface temperature permitted by the temperature class i.e. T6 = T85°C, T5 = T100°C, T4 = T135°C and T3 = T200°C

| | |
|---|---|
| Project Number | 51E16205 |
| Date | 8 July 1998 |
| Latest Issue | 25 May 2007 |
| C. Index | 03 |

This certificate and its schedules may only be reproduced in its entirety and without change.

C Ellaby
Certification Officer

**Sira Certification Service**
Rake Lane, Eccleston, Chester, CH4 9JN, England

Tel: +44 (0) 1244 670900
Fax: +44 (0) 1244 681330
Email: info@siracertification.com
Web: www.siracertification.com

## SCHEDULE

## EC TYPE-EXAMINATION CERTIFICATE

BAS98ATEX2168X

Re-issued 13 April 2006 to remove the EM6 solenoid and associated drawings, and to include all the supplements and variations into one, new, prime certificate and give a definitive drawing list, summarising all BASEEFA supplements, and Sira variations preceding this date.
Re-issued 14 December 2006 to certify the equipment for compliance with the latest European Standards and incorporate the variation 1 (ONE) dated 21 November 2006.
Re-issued 25 May 2007 to introduce the changes described in report number R51E16205A.

13 **DESCRIPTION OF EQUIPMENT**

The type EMXX and EM5 solenoids comprise of a coil of polyurethane/polyamide enamelled copper wire wound on a polyphenylene sulphide bobbin. The bobbin is mounted onto a PCB, which in turn is mounted onto a mild steel yoke assembly. The electrical supply to the solenoid is via an internal cable supported by the encapsulant and an optional cable gland arrangement. The cable has an earth conductor that is terminated onto the yoke assembly by means of a solder tag. In addition to the requirements of the standards listed in section 1, the permanently attached cables have been assessed for their suitability for use inside liquid fuel dispensers.

Thermal protection is provided by means of a non-resetting thermal fuse connected in series with supply conductor and the coil winding. The thermal fuse is soldered onto the PCB and has an operating temperature of 165°C ±3°C. There is an optional suppression diode which, when used, results in a T3 temperature class for the coil on all units. The solenoid also has an alternative construction that does not have an earth washer; the earth is provided by a spring clip that forces the coil cable assembly onto the solenoid operator bonnet.

The complete assembly is encapsulated using HYSOL Type MH6-0504 mineral filled glass fibre reinforced epoxy moulding compound.

**EMXX Solenoids -** the EMXX solenoids are selected from the range listed below:

| Watts | Voltage | Ambient -40°C to yy°C | T Class, TDust |
|---|---|---|---|
| Up to 4.05 W | Up to 440 V a.c. | 65°C | T3, T200°C |
| 4.05 W to 10.5W | Up to 440 V a.c. | 65°C | T3, T200°C |
| Up to 11.2 W | Up to 240 V d.c. | 65°C | T4, T135°C |
| Up to 11.2 W | Up to 240 V d.c. | 65°C | T3, T200°C |
| 11.2 W to 19.7 W | Up to 240 V d.c. | 40°C | T4, T135°C |
| Up to 1.7 W | Up to 240 V d.c. | 65°C | T6, T85°C |
| ≤19.7 W | Up to 240 V d.c. | 70°C | T3, T200°C |

**EM5 Solenoids -** the dimensions are reduced overall to form the EM5 solenoids, which are selected from the range listed below:

| Watts | Voltage | Ambient -40°C to yy°C | T Class, TDust |
|---|---|---|---|
| Up to 5 W | Up to 440 V a.c. | 60°C | T4, T135°C |
| Up to 3.5 W | Up to 240 V d.c. | 40°C | T5, T100°C |
| Up to 3.5 W | Up to 240 V d.c. | 40°C | T3, T200°C |
| Up to 3.5 W | Up to 240 V d.c. | 60°C | T4, T135°C |
| Up to 3.5 W | Up to 240 V d.c. | 60°C | T3, T200°C |
| 3.5 W to 6.9 W | Up to 240 V d.c. | 40°C | T3, T200°C |
| 6.9 W - 22.0 W | Up to 240 V d.c. | 40°C | T3, T200°C |
| Up to 10 W | Up to 440V 50/60 Hz | 65°C | T3, T200°C |

Date 8 July 1998
Latest Issue 25 May 2007

This certificate and its schedules may only be reproduced in its entirety and without change.





**Sira Certification Service**
Rake Lane, Eccleston, Chester, CH4 9JN, England

Tel: +44 (0) 1244 670900
Fax: +44 (0) 1244 681330
Email: info@siracertification.com
Web: www.siracertification.com

## SCHEDULE

## EC TYPE-EXAMINATION CERTIFICATE

BAS98ATEX2168X

### Other manufacturing sites

Asco Controls B.V., Industrielaan 21, Postbus 3, 3925 ZG Scherpenzeel, Netherlands
Asco Joucomatic, 49-53 rue de BEauce, BP 17, 28111 Luce France
Ascoval Industria e Commercio Ltda, Rodovia Pres. Castelo Branco, Km 20 - Jardim Santa Cecilia 06465-300 Barueri – SP – Brazil
Asco (India) Ltd, 147 Karapakkan Village, Chennai – 600 096, Tamil Nadu, India

14 **DESCRIPTIVE DOCUMENTS**

14.1

| Drawing No. | Sheet | Rev. | Date | Description |
|---|---|---|---|---|
| 108864 | 1 of 1 | AB | 22 Jun 06 | Cable |
| 118231 | 1 of 1 | V | 09 May 07 | Solenoid Type EMXX (General Assembly) |
| 118610 | 1 of 1 | AB | 27 Jul 06 | Coil/Cable Assembly for EMXX Solenoid Operator |
| 129657 | 1 of 1 | M | 22 Jun 06 | Coil/Cable Assembly for EM5 Solenoid Operator |
| 129682 | 1 of 1 | M | 27 Jul 06 | Type EM5 Encapsulation |
| 284582 | 1 of 1 | B | 15 Aug 06 | Cable |
| 144220 | 1 of 1 | B | 13 Oct 03 | Warning Label |
| 144215 | 1 of 1 | B | 13 Oct 03 | Product Label |

14.2 Report numbers BASEEFA 98(C)0433, BASEEFA 98(C)0883, BASEEFA 99(C)0071,BASEEFA 99(T)0455, BASEEFA 01(C)0301, ST&C report numbers R52A9530A, R53V9882, R53V10570A, R52A11750A, R51V12405A, R51A13905A, R51A14805A, R51A15527A, R51L15207B and R51E16205

15 **SPECIAL CONDITIONS FOR SAFE USE** (denoted by X after the certificate number)

15.1 The solenoids shall be connected to a supply protected by a fuse capable of interrupting the prospective short circuit current.

15.2 For solenoid operators fitted to valves used in vapour recovery systems where a Zone 0 exists within the valve and pipework, the solenoid operators or valves fitted with solenoid operators shall be subject to the routine test in accordance with PAS 022: 1997 Clause 4.8 Annex 1 using air as test media and a test pressure of 15 bar (+0.1), (-0). The pipework is limited to a maximum diameter of 15 mm with pipe runs not exceeding 3 m in length.

15.3 When installed, the free end of the permanently connected, integral cable shall be suitable terminated. The leads of solenoids that are supplied with an integral cable that does not have the additional cable glanding feature shall also be suitably protected from mechanical damage.

15.4 The EMXX & EM5 Solenoids are only suitable for use within liquid fuel metering pumps, dispensers and remote pumping units when they are fitted with cables that marked with either H05V2V2-F or H05V2V5-F.

16 **ESSENTIAL HEALTH AND SAFETY REQUIREMENTS OF ANNEX II** (EHSRs)

The relevant EHSRs that are not addressed by the standards listed in this certificate have been identified and individually assessed in report numbers BASEEFA 98(C)0433, BASEEFA 98(C)0883, BASEEFA 99(C)0071, BASEEFA 99(T)0455, BASEEFA 01(C)0301, ST&C report number R52A9530A, R53V9882, R53V10570A, R52A11750A, R51V12405A, R51A13905A, R51A14805A, R51A15527A, R51L15207B and R51E16205.

Date 8 July 1998
Latest Issue 25 May 2007

This certificate and its schedules may only be reproduced in its entirety and without change.





**Sira Certification Service**
Rake Lane, Eccleston, Chester, CH4 9JN, England

Tel: +44 (0) 1244 670900
Fax: +44 (0) 1244 681330
Email: info@siracertification.com
Web: www.siracertification.com

## SCHEDULE

## EC TYPE-EXAMINATION CERTIFICATE

BAS98ATEX2168X

### 17 CONDITIONS OF CERTIFICATION

17.1 The use of this certificate is subject to the Regulations Applicable to Holders of Sira Certificates.

17.2 Holders of EC type-examination certificates are required to comply with the production control requirements defined in Article 8 of directive 94/9/EC.

17.3 The solenoids shall be subjected to an electric strength test in accordance with clause 9.2 of EN 60079-18:2004 shall be carried out at 1000 V + 2 Un, or 1500 V, which ever is the greater, for 60 seconds on the encapsulated solenoid. Alternatively, if this test voltage is multiplied by 1.2 times, it may be applied for at least 100 ms. the exposed metal surface of the solenoid shall be connected to earth. The voltage shall be applied between the coil circuit joined together and earth.

17.4 The integral leads of the EMXX and EM5 Solenoids that are intended to be used with liquid fuel metering pumps, dispensers and remote pumping units shall be made from cables that marked with either H05V2V2-F or H05V2V5-F.

17.5 Solenoids will normally be supplied with an electrostatic warning label, however, for operators specifically used within petrol pump dispenser enclosures no label is fitted.

17.6 The finished manufactured equipment is to be visually inspected to verify no damage cracks, shrinkage, swelling etc.

Date 8 July 1998
Latest Issue 25 May 2007

This certificate and its schedules may only be reproduced in its entirety and without change.





**Sira Certification Service**
Rake Lane, Eccleston, Chester, CH4 9JN, England

Tel: +44 (0) 1244 670900
Fax: +44 (0) 1244 681330
Email: info@siracertification.com
Web: www.siracertification.com

# EC TYPE-EXAMINATION CERTIFICATE VARIATION

| | | | |
|---|---|---|---|
| **CERTIFICATE NUMBER** | BAS98ATEX2168X | Dated<br>Latest Issue | 8 July 1998<br>25 May 2007 |
| **Sira VARIATION NUMBER** | 1 (ONE) | Dated | 23 April 2008 |

**VARIATION TO EQUIPMENT**

To permit:

1 The use of an alternative polyurethane insulated cable type FLRYY 2C x 1 $mm^2$ within EMXX & EM5 solenoids rated 12VDC and 24VDC; the cable is not intended to be used with solenoids intended for use in liquid fuel metering pumps, dispensers and remote pumping units applications.

2 Permit the manufacturer of the equipment at the following, additional, manufacturing site:

Asco Asia – Shanghai, No8, Hua Min Road, Xin Qiao, Song Jiang District, Shanghai 201612, China

**DESCRIPTIVE DOCUMENTS**

| Number | Sheet | Rev. | Date | Description |
|---|---|---|---|---|
| 118610 | 1 of 1 | AC | 10 Dec 07 | Solenoid Type EMXX (General Assembly) |
| 129657 | 1 of 1 | N | 10 Dec 07 | Solenoid Type EM5 (General Assembly) |
| 294117 | 1 of 1 | - | 10 Dec 07 | PU cable for Type EMXX & EM5 Solenoids |

**ADDITIONAL CONDITIONS OF CERTIFICATION**

None

**File No.** 51L18075

**Report No.** R51L18075A

**C Ellaby**
**Certification Officer**

This Variation and its schedules may only be reproduced in its entirety and without change.



**Sira Certification Service**
Rake Lane, Eccleston, Chester, CH4 9JN, England

Tel: +44 (0) 1244 670900
Fax: +44 (0) 1244 681330
Email: info@siracertification.com
Web: www.siracertification.com

Certificate Number
Baseefa06ATEX0092

Issued 1 June 2006


1 # EC - TYPE EXAMINATION CERTIFICATE

2 **Equipment or Protective System Intended for use in Potentially Explosive Atmospheres Directive 94/9/EC**

3 EC - Type Examination Certificate Number: **Baseefa06ATEX0092**

4 Equipment or Protective System: **Type KCD2-SR-Ex*.* Switch Amplifier**

5 Manufacturer: **Pepperl + Fuchs GmbH**

6 Address: **Königsberger Allee 87, 68307 Mannheim, Germany**

7 This equipment or protective system and any acceptable variation thereto is specified in the schedule to this certificate and the documents therein referred to.

8 Baseefa (2001) Ltd., Notified Body number 1180, in accordance with Article 9 of the Council Directive 94/9/EC of 23 March 1994, certifies that this equipment or protective system has been found to comply with the Essential Health and Safety Requirements relating to the design and construction of equipment and protective systems intended for use in potentially explosive atmospheres given in Annex II to the Directive.

The examination and test results are recorded in confidential Report No. **05(C)0856/1**

9 Compliance with the Essential Health and Safety Requirements has been assured by compliance with:

**EN 60079-0: 2004 EN 50020: 2002 EN 60079-26: 2004 IEC 61241-0: 2004 EN 61241-11: 2005**

except in respect of those requirements listed at item 18 of the Schedule.

10 If the sign "X" is placed after the certificate number, it indicates that the equipment or protective system is subject to special conditions for safe use specified in the schedule to this certificate.

11 This EC - TYPE EXAMINATION CERTIFICATE relates only to the design and construction of the specified equipment or protective system. Further requirements of the Directive apply to the manufacturing process and supply of this equipment or protective system. These are not covered by this certificate.

12 The marking of the equipment or protective system shall include the following :

Ⓔx **II (1) GD** **[Ex ia] IIC** $-20°C \leq T_a \leq +60°C$
**[Ex iaD]**

Ⓔx **I (M1)** **[Ex ia] I**

This certificate may only be reproduced in its entirety, without any change, schedule included.

Baseefa Customer Reference No. **0808**

Project File No. **05/0856**

This certificate is granted subject to the general terms and conditions of Baseefa (2001) Ltd. It does not necessarily indicate that the equipment may be used in particular industries or circumstances.

R S SINCLAIR
DIRECTOR
On behalf of
Baseefa (2001) Ltd.

**Baseefa**
Rockhead Business Park, Staden Lane,
Buxton, Derbyshire SK17 9RZ
Telephone +44 (0) 1298 766600 Fax +44 (0) 1298 766601
e-mail info@baseefa.com web site www.baseefa.com
Baseefa is a trading name of Baseefa (2001) Ltd
Registered in England No. 4305578 at the above address

13 **Schedule**

14 **Certificate Number Baseefa06ATEX0092**

**15 Description of Equipment or Protective System**

The Type KCD2-SR-Ex*.* Switch Amplifiers are designed to transfer digital signals from the hazardous area to unspecified apparatus located in the non-hazardous area. The voltage and current passed to the hazardous area are limited to intrinsically safe levels and have linear characteristics. Up to two hazardous area channels fitted are galvanically isolated from the non-hazardous area circuit using transformers.

The Type KCD2-SR-Ex*.* Switch Amplifier comprise a number of electronic components, including isolating transformers, fuses, zener diodes and resistors all mounted on a single printed circuit board and housed in a plastic enclosure with polarised plug-in terminals for hazardous and non-hazardous area connections. The non-hazardous area connections are via relay contacts with configuration switches allowing the setting of the direction of operation and lead monitoring. LED indication is provided for power-on and channel status.

There are three models of the Type KCD2-SR-Ex*.* Switch Amplifier, the Type KCD2-SR-Ex2 Two Channel Switch Amplifier, the Type KCD2-SR-Ex1 Single Channel Amplifier and Type KCD2-SR-Ex1.LB Single Channel Switch Amplifier. The Types KCD2-SR-Ex1 & KCD2-SR-Ex1.LB are depopulated versions of the Type KCD2-SR-Ex2 with only one hazardous area channel.

**Input/Output Parameters**

Non-Hazardous Area Terminals 5 to 8, 9 & 10 and Power Rail Connections PR1 & PR2

$U_m$ = 253V r.m.s.

The circuit connected to non-hazardous area terminals 9 & 10 or Power Rail Connections PR1 & PR2 is designed to operate from a d.c. supply voltage up to 30V.

Non-hazardous area terminals 5 & 6 (Channel 1) and 7 & 8 (Channel 2) are connected to relay contacts which can switch up to 253V r.m.s & 2A r.m.s.

Power Rail Connections PR4 (Fault Bus)

$U_m$ = 40V d.c.

The circuit connected to Power Rail Connection PR4 is designed to operate from a d.c. supply voltage up to 30V.

Hazardous Area Terminals 1 w.r.t. 2 (Channel 1)

Or
Hazardous Area Terminals 3 w.r.t. 4 (Channel 2 – KCD2-SR-Ex2 model only)

| | | | | | |
|---|---|---|---|---|---|
| $U_o$ | = | 10.5V | $U_i$ | = | 12V |
| $I_o$ | = | 17.1mA | | | |
| $P_o$ | = | 45mW | | | |
| $C_i$ | = | 0 | | | |
| $L_i$ | = | 0 | | | |

The capacitance and either the inductance or inductance to resistance ratio (L/R) of the load connected to output terminals of either channel must not exceed the following values:

| GROUP | CAPACITANCE (µF) | INDUCTANCE (mH) | OR L/R RATIO (µH/ohm) |
|---|---|---|---|
| IIC | 2.41 | 121.5 | 801 |
| IIB | 16.8 | 486.3 | 1,628 |
| IIA | 75.0 | 972.7 | 1,628 |
| I | 73.1 | 1,000 | 1,628 |

Note: The above load parameters apply where:

1. The external circuit contains no combined lumped inductance $L_i$ and capacitance $C_i$ greater than 1% of the above values

Or 2. The inductance and capacitance are distributed as in a cable.

Or 3. The external circuit contains either only lumped inductance or lumped capacitance in combination with a cable.

In all other situations e.g. the external circuit contains combined lumped inductance or lumped capacitance, up to 50% of each of the L and C values is allowed.

**16 Report Number**

05(C)0856/1

**17 Special Conditions for Safe Use**

None

**18 Essential Health and Safety Requirements**

All relevant Essential Health and Safety Requirements are covered by the standards listed at item 9.

**19 Drawings and Documents**

| Number | Sheet | Issue | Date | Description |
|---|---|---|---|---|
| 16-533BS | 1 | Original | 2006-May-15 | Summary – KCD2-SR-Ex*.* |
| 16-533BS-00 | 1 to 8 | Original | 2006-Apr-25 | Description – KCD2-SR-Ex*.* |
| 16-533BS-01 | 1 & 2 | Original | 2006-Apr-25 | Schematic – KCD2-SR-Ex2 K-System Slimline |
| 16-533BS-01 | 3 & 4 | Original | 2006-Apr-25 | Schematic – KCD2-SR-Ex1.* K-System Slimline |
| 16-533BS-02 | 1 | Original | 2005-Dec-05 | Relevant Components – KCD2-SR-Ex*.* / HiC282* |
| 16-533BS-03 | 1 of 5 | Original | 2005-Sep-30 | Assembly drawing wired top side – KCD2-SR-Ex1.* / KCD2-SR-Ex2 |
| 16-533BS-03 | 2 of 5 | Original | 2005-Sep-30 | Assembly drawing SMD top side – KCD2-SR-Ex2 |
| 16-533BS-03 | 3 of 5 | Original | 2005-Sep-30 | Assembly drawing SMD bottom side – KCD2-SR-Ex2 |
| 16-533BS-03 | 4 of 5 | Original | 2005-Sep-30 | Assembly Drawing SMD top side – KCD2-SR-Ex1.* |
| 16-533BS-03 | 5 of 5 | Original | 2005-Sep-30 | Assembly Drawing SMD bottom side – KCD2-SR-Ex1.* |
| 16-533-04 | 1 & 2 | Original | 2005-Dec-05 | Housing – KCD2 |
| 16-533BS-05 | 1 to 4 | Original | 2005-Sep-30 | PCB Layout – KCD2-SR-Ex1 (-Ex2)(.LB) |
| 16-533BS-06 | 1 to 4 | Original | 2005-Dec-05 | Transformer – KCD2-SR-Ex*.* / HiC282* |
| 16-533BS-09 | 1 & 2 | Original | 2006-Apr-25 | Instructions – KCD2-SR-Ex*.* |
| 16-533BS-10 | 1 to 3 | Original | 2006-May-08 | Type Label – KCD2-SR-Ex*.* |

The above drawings are associated and held with IECEx Certificate No. IECEx BAS 06.0025

1 # SUPPLEMENTARY EC - TYPE EXAMINATION CERTIFICATE

2 **Equipment or Protective System Intended for use in Potentially Explosive Atmospheres Directive 94/9/EC**

| | | |
|---|---|---|
| 3 | Supplementary EC - Type Examination Certificate Number: | **Baseefa06ATEX0092/1** |
| 4 | Equipment or Protective System: | **Type KCD2-SR-Ex*.* Switch Amplifier** |
| 5 | Manufacturer: | **Pepperl + Fuchs GmbH** |
| 6 | Address: | **Königsberger Allee 87, 68307 Mannheim, Germany** |

7 This supplementary certificate extends EC – Type Examination Certificate No. Baseefa06ATEX0092 to apply to equipment or protective systems designed and constructed in accordance with the specification set out in the Schedule of the said certificate but having any variations specified in the Schedule attached to this certificate and the documents therein referred to.

This supplementary certificate shall be held with the original certificate.

This certificate may only be reproduced in its entirety, without any change, schedule included.

Baseefa Customer Reference No. **0808**

Project File No. **06/0971**

This certificate is granted subject to the general terms and conditions of Baseefa (2001) Ltd. It does not necessarily indicate that the equipment may be used in particular industries or circumstances.

**Baseefa**
Rockhead Business Park, Staden Lane,
Buxton, Derbyshire SK17 9RZ
Telephone +44 (0) 1298 766600 Fax +44 (0) 1298 766601
e-mail info@baseefa.com web site www.baseefa.com
Baseefa is a trading name of Baseefa (2001) Ltd
Registered in England No. 4305578 at the above address

R S SINCLAIR
DIRECTOR
On behalf of
Baseefa (2001) Ltd.

13 # Schedule

14 ## Certificate Number Baseefa06ATEX0092/1

**15 Description of the variation to the Equipment or Protective System**

**Variation 1.1**

To permit a minor change to the transformer design not affecting the original assessment.

**16 Report Number**

None.

**17 Special Conditions for Safe Use**

None

**18 Essential Health and Safety Requirements**

Compliance with the Essential Health and Safety Requirements is not affected by this variation.

**19 Drawings and Documents**

| Number | Sheet | Issue | Date | Description |
|---|---|---|---|---|
| 16-533BS A | 1 | A | 2006-Nov-15 | Summary – KCD2-SR-Ex*.* |
| 16-533BS-00A | 1 to 8 | A | 2006-Nov-15 | Description – KCD2-SR-Ex*.* |
| 16-533BS-06A | 1 to 4 | A | 2006-Nov-15 | Transformer – KCD2-SR-Ex*.* / HiC282* |

The above drawings are associated and held with IECEx Certificate No. IECEx BAS 06.0025/1

# Konformitätserklärung / Declaration of Conformity

Nach DIN EN ISO/IEC 17050-1 / in accordance with DIN EN ISO/IEC 17050-1

Diese Konformitätserklärung gilt für folgende Produkte:
This Declaration of Conformity is valid for the following parts:

Produktbezeichnung/Description :

Trennbaustein /
Galvanically isolated barrier:

| | |
|---|---|
| KCD2–SR-Ex1.LB | Part.Nr. : 185532 |
| KCD2–SR-Ex2 | Part.Nr. : 185533 |

**Diese Konformitätserklärung gilt nur in Zusammenhang mit dem gültigen Pepperl+Fuchs Datenblatt, der gültigen Pepperl+Fuchs Betriebsanleitung sowie den besonderen Bedingungen für den Einsatz in Zone 2.**

This Declaration of Conformity is only valid in connection with the valid datasheet of Pepperl+Fuchs, the valid instruction of Pepperl+Fuchs and the special conditions for the installation in zone 2.

---

**Die Pepperl+Fuchs GmbH, Königsberger Allee 87, 68307 Mannheim erklärt hiermit in alleiniger Verantwortung, dass das oben genannte Produkt mit den angegebenen Normen oder normativen Dokumenten übereinstimmt.**

We, Pepperl+Fuchs GmbH, Königsberger Allee 87, 68307 Mannheim hereby declare under our sole responsibility that the above mentioned product is in accordance with the listed harmonised standards or normative documents.

---

| | |
|---|---|
| **EG-Richtlinie**<br>EC-Directive | **Angewandte harmonisierte Normen**<br>Applied harmonized standards |
| 94/9/EG (ATEX) | EN 60079-15: 2005<br>EN 60079-0: 2004 |

---

| | |
|---|---|
| **Kennzeichnung**<br>Marking | **Ⓔx II 3 G Ex nA nC IIC T4 X** |

---

**Technische Daten:**
Technical data:

**siehe gültiges Datenblatt, Betriebsanleitung**
see valid datasheet, instruction

**www.pepperl-fuchs.com**

---



Item No. : 442787
Order No. : 94737
Checked : 14.11.07 GB



PEPPERL+FUCHS

## Besondere Bedingungen für den Einsatz in Zone 2
Special conditions for the installation in zone 2

**Die Geräte sind in Schalt- oder Verteilerkästen zu installieren,**
- **die mindestens der Schutzart IP54 gemäß EN 60529 entsprechen,**
- **die den Anforderungen an die Lichtbeständigkeit sowie an die Schlagfestigkeit gemäß EN 50014 / IEC 60079-0 entsprechen,**
- **die den Anforderungen an die Wärmebeständigkeit gemäß EN 50014 / IEC 60079-0 entsprechen,**
- **bei denen durch bestimmungsgeäßen Gebrauch, bei der Wartung und der Reinigung keine Zündgefahren durch elektrostatische Aufladung auftreten,**
- **deren Kabelleitungseinführungen (KLE) den Anforderungen der EN 50014 / IEC 60079-0 entsprechen.**

**An nicht eigensichere Stromkreise in der Zone 2 dürfen nur Geräte angeschlossen werden, welche für den Betrieb in explosionsgefährdeten Bereichen der Zone 2 und die am Einsatzort vorliegenden Bedingungen geeignet sind (IEC EN 60079-14).**

**Das Verbinden und Trennen der Anschlüsse von nicht eigensicheren Stromkreisen unter Spannung ist nur bei der Installation, der Wartung oder für Reparaturzwecke zulässig.**
**Anmerkung: Das zeitliche Zusammentreffen von explosionsfähiger Atmosphäre und Installation, Wartung bzw. Reparatur wird in der Zone 2 als unwahrscheinlich bewertet.**

The devices should be installed in a switch or junction box which:
- corresponds at least IP54 in accordance to EN 60529,
- is confirm to the requirements of resistance to light and resistance to impact corresponding to EN 50014 / IEC 60079-0,
- is confirm to the requirements of thermal endurance corresponding to EN 50014 / IEC 60079-0,
- must not cause ignition danger by electrostatic charge during intented use, maintenance and cleaning,
- has cable glands that are in accordance to EN 50014 / IEC 60079-0.

Only devices which are suitable for the operation in explosion hazardous areas of the zone 2 and the conditions available at the place of operation (IEC EN 60079-14), are allowed to be connected to non intrinsically safe circuits in the zone 2.

The connecting and disconnecting of the connections of non intrinsically safe circuits under voltage is only permitted during installation, for maintenance or for repair purposes.
Note: The temporal coincidence of explosion hazardous atmosphere and installation, maintenance resp. repair purposes is assessed as unlikely.

DIN EN ISO 9001
Reg. Nr. 14 760-02

Hersteller-Unterschrift: Dr. Kegel
Signature of Manufacturer

Funktion des Unterzeichners: Geschäftsführer
Function of the signer Managing Director

Datum / date : October 2006



PEPPERL+FUCHS

SIEMENS

Prüf-Nr./Q-Nr.: *Certificate No.:* **2236 c**

Dienststelle: *Department:* **A&D CD CC TS2 / Drutschmann**

Ort: *Place:* **Amberg** Tag: *Date:* **2003-10-21**



# Deckblatt / *Cover Page*

## PTB - EC-Type-Examination Certificate (Physikalisch-Technische-Bundesanstalt)

Erzeugnis / *Product* **Thermistor Motor Protection Unit**

Typ: *Type:* **3RN10**

Hersteller: *Manufacturer:* **Siemens AG, Amberg**

Art der Prüfung / *Type of test:* **Explosive Atmospheres**

Prüfer / *Tested by:* **Dr.-Ing. F. Lienesch**
**Dr.-Ing. U. Engel**

Tag der Prüfung / *Date of test:* **2001-03-26**
**2002-12-11**
**2003-09-09**

Prüfort / *Test site:* **Braunschweig**

Prüfstelle / *Testing authority* **PTB**

Angewandte Prüfbestimmungen / *Test specifications applied:*

**EN 60947-1, EN 60947-5-1**
**DIN VDE 0660 Teil 302 und Teil 303**
**DIN EN 60079-14**
**EN 50281-1-1**

Anlage / *Enclosure:*

**EC-Type-Examination Certificate No. PTB 01 ATEX 3218, dated 2001-03-26**
**1. Supplement to EC-Type-Examination Certificate No. PTB 01 ATEX 3218, dated 2002-12-11**
**2. Supplement to EC-Type-Examination Certificate No. PTB 01 ATEX 3218, dated 2003-09-09**
**3. Supplement to EC-Type-Examination Certificate No. PTB 01 ATEX 3218, dated 2003-09-09**
**Safety- and Instructionmanual, dated 2003-07-10**
**Test Report No. PTB Ex 3.43-30087/99, dated 1999-09-06 (confidential)**
**Test Report No. PTB Ex 02-32216, dated 2002-12-11 (confidential)**
**Test Report No. PTB Ex 02-33316, dated 2003-09-09 (confidential)**
**Test Report No. PTB Ex 02-33317, dated 2003-09-09 (confidential)**

**SIEMENS**

Prüf-Nr./Q-Nr.: *Certificate No.:* **2236 c**

Dienststelle: *Department:* **A&D CD CC TS2 / Drutschmann**

Ort: *Place:* **Amberg** Tag: *Date:* **2003-10-21**



Prüfergebnis / *Test results:*

- **This equipment has been found to comply with the Essential Health and Safety Requirements relating to the design and construction of equipment and protective systems intended for use in potentially explosive atmospheres, give in Annex II to the Directive.**
- **The TMP tripping devices type 3RN1011-.B / 3RN1011-.G / 3RN1012-.B / 3RN1012-.G and 3RN1013-...0 can also be used as protection device for motors in locations with explosive dust atmospheres according to EN 50281-1-1 (refer to Supplement 3 dated 2003-09-09).**

Gültigkeit (Datum, Gerät) / Validity (date, device):

Bemerkungen / *Remarks:* **Erstellt / Issued: 1999-09-27**

**Index a dated 2001-05-31:** **Rearrangement for EC-Type-Examination Certificate**

**Index b dated 2003-01-10:** **1. Supplement to EC-Type-Examination Certificate added, Safety- and Instructionmanual replaced by version dated 14.08.2002**

**Index c dated 2003-10-21:** **2. Supplement to EC-Type-Examination Certificate added**
**3. Supplement to EC-Type-Examination Certificate added**
**Safety- and Instructionmanual dated 2002-08-14 replaced by version dated 2003-07-10**

***Deckblatt ist nicht Bestandteil der Bescheinigung***
***Cover Page is not part of the Certificate***

*A&D CD CC TS2 Mr. Drutschmann*

# Physikalisch-Technische Bundesanstalt

**Braunschweig und Berlin**

(1) # EC-TYPE-EXAMINATION CERTIFICATE

**(Translation)**

(2) Equipment and Protective Systems Intended for Use in Potentially Explosive Atmospheres - **Directive 94/9/EC**

(3) EC-type-examination Certificate Number:

**PTB 01 ATEX 3218**

(4) Equipment: Tripping units for thermal machine protection, types: 3RN10..

(5) Manufacturer: Siemens AG, A&D CD CP

(6) Address: Werner-von-Siemens-Str. 48, 92220 Amberg, Germany

(7) This equipment and any acceptable variation thereto are specified in the schedule to this certificate and the documents therein referred to.

(8) The Physikalisch-Technische Bundesanstalt, notified body No. 0102 in accordance with Article 9 of the Council Directive 94/9/EC of 23 March 1994, certifies that this equipment has been found to comply with the Essential Health and Safety Requirements relating to the design and construction of equipment and protective systems intended for use in potentially explosive atmospheres, given in Annex II to the Directive.

The examination and test results are recorded in the confidential report PTB Ex 3.43-30087/99.

(9) Compliance with the Essential Health and Safety Requirements has been assured by compliance with:

**EN 60947-1** **EN 60947-5** **DIN VDE 0660 Teil 302 und Teil 303** **EN 60079-14**

(10) If the sign "X" is placed after the certificate number, it indicates that the equipment is subject to special conditions for safe use specified in the schedule to this certificate.

(11) This EC-type-examination Certificate relates only to the design and construction of the specified equipment in accordance with Directive 94/9/EC. Further requirements of this Directive apply to the manufacture and supply of this equipment.

(12) The marking of the equipment shall include the following:

**II (2) G**

Zertifizierungsstelle Explosionsschutz
By order:

Dr.-Ing. F. Lienesch
Regierungsrat

Braunschweig, March 26, 2001

PHYSIKALISCH-TECHNISCHE BUNDESANSTALT
II



EC-type-examination Certificates without signature and official stamp shall not be valid. The certificates may be circulated only without alteration. Extracts or alterations are subject to approval by the Physikalisch-Technische Bundesanstalt.
In case of dispute, the German text shall prevail.

Physikalisch-Technische Bundesanstalt • Bundesallee 100 • D-38116 Braunschweig

(13) # SCHEDULE

(14) ## EC-TYPE-EXAMINATION CERTIFICATE PTB 01 ATEX 3218

(15) Description of equipment

All tripping units for thermal machine protection of type 3RN10 work on the closed-circuit principle and are self-monitoring with respect to the breakage of a detector wire. The tripping units of types 3RN1011, 3RN1012, 3RN1013, 3RN1022 and 3RN1062 are monitored and controlled by a microcontroller. The status of the units is stored, and the status is preserved in the event of mains failure (no resetting on voltage failure). The most important functions of these units are the self-checking function, integrated low-voltage detection and oscillator monitoring. In addition, two detector circuits can be connected to the type 3RN1022 units and six detector circuits to the type 3R1062 units.

In addition to the functions stated above, the detector circuit of the type 3RN1013 units is equipped with a short-circuit detection unit which constantly checks the resistor of detector circuit for a short-circuit during operation. Installation and use are subjected to the safety and operate installation.

All functions of the tripping units for thermal machine protection serve for the protection of non-explosion-protected motors and explosion-protected motors in operation and in the event of a disturbance. 32 variants of types 3RN10 are manufactured (16 variants with screw-type terminal and 16 variants with cage clamp). Additional information can be gathered from the description of the type 3RN10 units and from the Siemens catalogue concerning low-voltage circuit logic (NS K), chapter: Tripping units for load feeders, Thermal motor protection.

(16) Test report PTB Ex 3.43-30087/99

(17) Special conditions for safe use

none

(18) Essential health and safety requirements

The tests carried out and their positive results as well as the proof furnished dated March 2, 2001 have confirmed compliance with the standards and thus with Directive 94/9/EC, Annex II (in particular point 1.5). Suitably selected and adjusted safety devices of this type are necessary for the safe operation of motors of the type of protection "increased safety". The devices themselves are installed outside potentially explosive atmospheres (article 1, section2 of the Directive).

Zertifizierungsstelle Explosionsschutz
By order:

Dr.-Ing. F. Lienesch
Regierungsrat

Braunschweig, March 26, 2001

PHYSIKALISCH-TECHNISCHE BUNDESANSTALT



EC-type-examination Certificates without signature and official stamp shall not be valid. The certificates may be circulated only without alteration. Extracts or alterations are subject to approval by the Physikalisch-Technische Bundesanstalt.
In case of dispute, the German text shall prevail.

Physikalisch-Technische Bundesanstalt • Bundesallee 100 • D-38116 Braunschweig

# Physikalisch-Technische Bundesanstalt

**Braunschweig und Berlin**

## 1. SUPPLEMENT

**according to Directive 94/9/EC Annex III.6**

## to EC-TYPE-EXAMINATION CERTIFICATE PTB 01 ATEX 3218

## (Translation)

Equipment: Tripping devices for thermal motor protection, types: 3RN10..

Marking: **II (2) G**

Manufacturer: Siemens AG, Gerätewerk Amberg
Address: Werner-von-Siemens-Str. 48
92220 Amberg, Germany

Description of supplements and modifications

All 3RN10 TMP tripping devices work according to the closed-circuit principle and are self-monitoring with respect to the breakage of a detector wire.

Among the most important functions are: the self-checking function, integrated low-voltage detection and oscillator monitoring, overtemperature detection, detection of wire interruption or dynamic wire break detection.

The tripping units of types 3RN1011 and 3RN1012 (two change-over switch) of compact devices and types 3RN1013 of multifunctional devices are configurated with short-circuit detection in the detector circuit.

Two PTC detector circuits can be conneted to the types 3RN1022 and six PTC detector circuits to the types 3RN1062.

All functions in the TMP tripping devices serve to protect non-explosion-protected motors and explosion-protected motors in regular operation and in case of failure.

58 variants of types 3RN10 are manufactured (29 variants with screw-type terminal and 29 variants with spring-loaded terminal).

Additional information can be gathered from the description of the type "3RN10" units (of August 14, 2002), and from the Siemens catalogue concerning low-voltage circuit logic (NS K) and from the internet adress "www.ad.siemens.de/csi/cd"

Test report: PTB Ex 02-32216



EC-type-examination Certificates without signature and official stamp shall not be valid. The certificates may be circulated only without alteration. Extracts or alterations are subject to approval by the Physikalisch-Technische Bundesanstalt.
In case of dispute, the German text shall prevail.

Physikalisch-Technische Bundesanstalt • Bundesallee 100 • D-38116 Braunschweig

# Physikalisch-Technische Bundesanstalt

**Braunschweig und Berlin**

## 1. SUPPLEMENT TO EC-TYPE-EXAMINATION CERTIFICATE PTB 01 ATEX 3218

Essential health and safety requirements

The tests carried out and their positive results as well as the proof furnished have confirmed compliance with the standards and thus with Directive 94/9/EC, Annex II (in particular point 1.5) of July 31, 2002 (directive949 EG_01_b.xls). Suitably selected and adjusted safety devices of this type are necessary for the safe operation of motors of the type of protection "increased safety". The devices themselves are installed outside potentially explosive atmospheres (article 1, section 2 of the Directive).

Zertifizierungsstelle Explosionsschutz
By order:

Dr.-Ing. U. Engel
Regierungsdirektor

PHYSIKALISCH-TECHNISCHE BUNDESANSTALT
11

Braunschweig, December 11, 2002



EC-type-examination Certificates without signature and official stamp shall not be valid. The certificates may be circulated only without alteration. Extracts or alterations are subject to approval by the Physikalisch-Technische Bundesanstalt.
In case of dispute, the German text shall prevail.

Physikalisch-Technische Bundesanstalt • Bundesallee 100 • D-38116 Braunschweig

# Physikalisch-Technische Bundesanstalt

**Braunschweig und Berlin**

## 2. SUPPLEMENT

**according to Directive 94/9/EC Annex III.6**

## to EC-TYPE-EXAMINATION CERTIFICATE PTB 01 ATEX 3218

## (Translation)

Equipment: Tripping devices for thermal motor protection, types: 3RN10..

Marking: Ⓔx **II (2) G**

Manufacturer: Siemens AG, Gerätewerk Amberg
Address: Werner-von-Siemens-Str. 48
92220 Amberg, Germany

Description of supplements and modifications

In the course of a deflection of the production, for types 3RN1000 and 3RN1010 the 24 V AC/DC power supply unit and for type 3RN1010-.CW.. the long-range power supply unit were revised and optimized.

Additional information can be gathered from the description of the type "3RN1" units of Juli 10, 2003, and from the Siemens catalogue concerning low-voltage circuit logic (NS K) and from the internet adress "www.ad.siemens.de/csi/cd"

All functions in the TMP tripping devices serve to protect non-explosion-protected motors and explosion-protected motors in regular operation and in case of failure.

Test report: PTB Ex 03-33316

Additional information can be taken from Test Reports PTB Ex 3.43-30087/99 and PTB Ex 02-32216.

Essential health and safety requirements

The tests carried out and their positive results as well as the proof furnished have confirmed compliance with the standards and thus with Directive 94/9/EC, Annex II (in particular point 1.5 with document "Directive 94 9 EG_91_b.xls of July 31, 2002". Suitably selected and adjusted safety devices of this type are necessary for the safe operation of motors of the type of protection "increased safety". The devices themselves are installed outside potentially explosive atmospheres (article 1, section 2 of the Directive).

Zertifizierungsstelle Explosionsschutz
By order:

Dr.-Ing. F. Lienesch
Oberregierungsrat

Braunschweig, September 09, 2003

PHYSIKALISCH-TECHNISCHE BUNDESANSTALT II

Sheet 1/1

EC-type-examination Certificates without signature and official stamp shall not be valid. The certificates may be circulated only without alteration. Extracts or alterations are subject to approval by the Physikalisch-Technische Bundesanstalt.
In case of dispute, the German text shall prevail.

# Physikalisch-Technische Bundesanstalt

**Braunschweig und Berlin**

## 3. SUPPLEMENT

**according to Directive 94/9/EC Annex III.6**

## to EC-TYPE-EXAMINATION CERTIFICATE PTB 01 ATEX 3218

## (Translation)

Equipment: Tripping devices for thermal motor protection, types: 3RN1011-.B/-.G, 3RN1012-.B/-.G and RN1013-...0

Marking: Ⓔx **II (2) GD**

Manufacturer: Siemens AG, Gerätewerk Amberg
Address: Werner-von-Siemens-Str. 48
92220 Amberg, Germany

Description of supplements and modifications

The TMP tripping devices, types 3RN1011-.B/-G, 3RN1012-.B/G and 3RN1013-...0, can be used to protect motors in areas with explosive gas atmospheres against inadmissible heating due to overload. With the extension to "D": dust" in the ATEX marking they can also be used as protection device for motors in locations with explosive dust atmospheres (EN 50282-1-1).

Additional information can be gathered from the description of the type "3RN1" units of Juli 10, 2003, and from the Siemens catalogue concerning low-voltage circuit logic (NS K) and from the internet adress "www.ad.siemens.de/csi/cd"

All functions in the TMP tripping devices serve to protect non-explosion-protected motors and explosion-protected motors in regular operation and in case of failure.

Test report: PTB Ex 03-33317

Additional information can be taken from Test Reports PTB Ex 3.43-30087/99 and PTB Ex 02-32216.

Essential health and safety requirements

The tests carried out and their positive results as well as the proof furnished have confirmed compliance with the standards and thus with Directive 94/9/EC, Annex II (in particular point 1.5) ) with document "Directive 94 9 EG_91_b.xls of July 31, 2002". Suitably selected and adjusted safety devices of this type are necessary for the safe operation of motors of the type of protection "increased safety". The devices themselves are installed outside potentially explosive atmospheres (article 1, section 2 of the Directive).

Zertifizierungsstelle Explosionsschutz
By order:

Dr.-Ing. F. Lienesch
Oberregierungsrat

Braunschweig, September 09, 2003

PHYSIKALISCH-TECHNISCHE BUNDESANSTALT

Sheet 1/1

EC-type-examination Certificates without signature and official stamp shall not be valid. The certificates may be circulated only without alteration. Extracts or alterations are subject to approval by the Physikalisch-Technische Bundesanstalt.
In case of dispute, the German text shall prevail.

Physikalisch-Technische Bundesanstalt • Bundesallee 100 • D-38116 Braunschweig

SIEMENS

# Thermistor Motor Protection Tripping Units 3RN1

**Operating Instructions** **English**

## Caution
**Follow Safety and Installation Instructions!**

### Manufacturer

Siemens AG
A&D CD CC
Werner-von-Siemens-Str. 48
D-92220 Amberg

### General

3RN1 thermistor motor protection tripping units are thermal protective devices that can be used to monitor the temperature of electric drives, transformer windings, oils, bearings, air etc. in conjunction with type A PTC resistors.

If a type A temperature sensor is connected to a type A tripping unit, the working temperatures (tripping and reset) in accordance with IEC 60034-11-2 (DIN VDE 0660 Part 303) are observed.

The characteristics of type A temperature sensors are described in IEC 60034-11-2 (DIN VDE 0660 Part 303), DIN 44081 and DIN 44082.

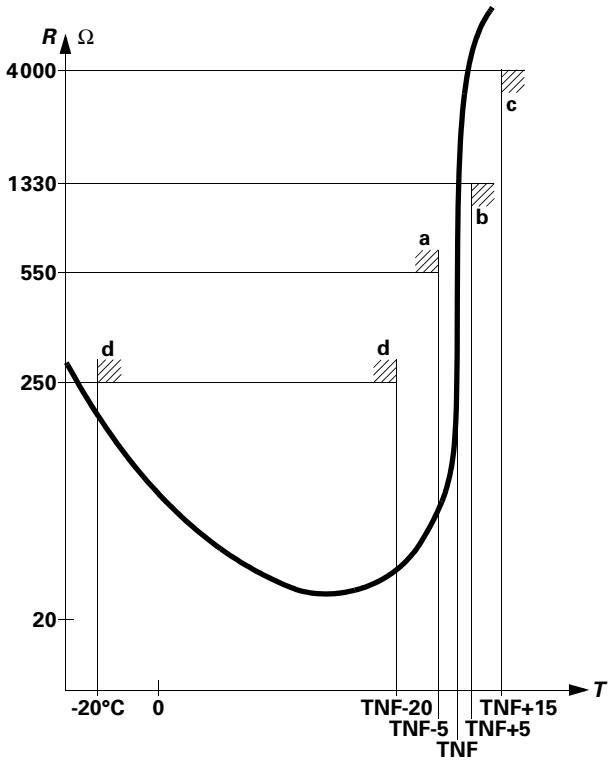


Typical characteristic of a type A sensor (logarithmic scale)

In addition to tripping units with automatic and manual reset functions, the 3RN1 device series also includes the *3RN1013-.BW01* tripping unit with a bistable output relay, the *3RN1022* with two measuring circuits (this unit outputs an alarm signal if the first tripping threshold is exceeded and switches off the motor on reaching the second threshold) and the *3RN1062* tripping unit for multi-motor protection with six measuring circuits and centralized fault indication.

The tripping and reset temperatures referred to TNF (rated operating temperature of the sensor) are as follows, depending on the number of sensors:

| | **Tripping temperature** | **Reset temperature** |
|---|---|---|
| 3 sensors | TNF +4K | TNF –7K |
| 6 sensors | TNF –5K | TNF –20K |

(The specified temperatures are limit values)

## Use in potentially explosive atmospheres

All 3RN1 devices are approved for group II, category (2) in the "G" area (area in which potentially explosive gas, vapor, mist or air mixtures are present).

PTB 01 ATEX 3218 **II (2) G**

The 3RN1011-.B, /-.G, 3RN1012-.B, /-G and 3RN1013-....0 device variants are additionally approved for the "D" area (area with combustible dust).

PTB 01 ATEX 3218 **II (2) GD**

The increased hazard in potentially explosive atmospheres demands strict adherence to the Operating Instructions (Safety and Installation Instructions), assembly instructions and the **EN 60079-14** / VDE 0165 standard concerning electrical equipment for use in locations with explosive **gas** atmospheres or the **EN 50281-1-1** standard concerning electrical equipment for use in locations with explosive **dust** atmospheres.

All connection, commissioning and maintenance work must be carried out **by qualified, responsible** personnel. Improper handling may result in **serious personal injury and considerable material damage**.

The devices 3RN1 comply with the requirements of the following classes:

| **Device** | **Class** | |
|---|---|---|
| 3RN1000, 3RN1010, 3RN1011-.C, 3RN1012-.C, 3RN1022, 3RN1062 | DIN V 19250<br>EN 954-1 | Requirement class 2<br>Category 1 |
| 3RN1011-.B, 3RN1011-.G, 3RN1012-.B, 3RN1012-.G, 3RN1013 | | Requirement class 3<br>Category 2 |

A risk analysis must be drawn up for the complete machine or plant. If this analysis yields a lower hazard potential (category 1), all 3RN1 thermal motor protection tripping units can be used providing the safety regulations are observed. If the plant or machine has a higher hazard potential, a device variant with integrated short-circuit detection in the sensor circuit is necessary.

## Wiring

The measuring circuit cables must be laid as separate control cables. It is not permissible to use wires belonging to the motor supply cables or to any other main circuit cables. If parallel power cables are likely to cause extreme inductive or capacitive interference, shielded control cables must be used.

Maximum length of sensor circuit cables:

| Cable cross-section | Cable length for tripping units | |
|---|---|---|
| | without short-circuit detection | with short-circuit detection [1] |
| | 3RN1000, 3RN1010, 3RN1011 - .C, 3RN1012 - .C, 3RN1022, 3RN1062 | 3RN1011 -.B/ -.G, 3RN1012 -.B/ -.G, 3RN1013 |
| 2,5 mm² | 2 x 2800 m | 2 x 250 m |
| 1,5 mm² | 2 x 1500 m | 2 x 150 m |
| 0,5 mm² | 2 x 500 m | 2 x 50 m |

[1]) Short-circuits in the sensor circuit are detected up to this maximum cable length.

## Technical data

| | |
|---|---|
| Rated operational voltage $U_e$ | AC/DC 24 V to AC/DC 240 V |
| Rated insulation voltage $U_i$ | 300 V |
| Rated frequency | 50 / 60 Hz |
| Permissible ambient temperature | –25 to +60 °C |
| Storage temperature | –40 to +80 °C |
| Resistance to extreme climates | In acc. with DIN 50017 |
| Degree of protection | IP20 |
| Conductor cross-sections | In acc. with EN 60947-1 |
| Approvals | EEx e, EEx d (PTB), CSA, UL |
| Marine classification | GL, LRS, BV |

## Technical data of the integrated auxiliary contacts

| | |
|---|---|
| Conventional thermal current $I_{th}$ | 5 A |
| Rated operational current $I_e$ | |
| AC15 to 240 V | 3 A |
| DC13 to 24 V | |
| 3RN1 | 1 A |
| 3RN1010/11/12-.C | 2 A |
| Short-circuit protection gL/gG | 6 A |

## Installation and commissioning

Install as described in Assembly Instructions No.: 3ZX1012-0RN10-1AA1 (enclosed with each device).

3RN1 devices are suitable for snap-on mounting onto a 35 mm standard rail in accordance with EN 50022 or for screw mounting with an adapter (accessory).
They can be mounted in any position.
If the device has a "manual reset" function, the test function can be activated and tripping simulated by pressing the blue test/reset button > 2 s.
Check that the protection function is working correctly prior to starting up the machine or plant.

## Maintenance and repair

The devices require no maintenance.
All repairs to the devices must be carried out by the manufacturer.

## Warranty

All warranty claims are subject to compliance with these Operating Instructions (Safety and Installation Instructions) and Assembly Instructions No.: 3ZX1012-0RN10-1AA1.

## Important

- The machine or plant must also be shut down immediately if the thermistor motor protection tripping unit is tripped in conjunction with a frequency converter. This must be taken into account in the circuit design.
- 3RN1 thermistor motor protection tripping units are suitable for protecting motors and machines with the EEx e type of protection. They have been tested and approved by the *Physikalisch Technische Bundesanstalt (PTB) in Braunschweig* (German Federal Testing Laboratory (PTB) in Brunswick).
- The devices are only allowed to be assembled and installed by suitably trained persons in accordance with the relevant standards and regulations!
- The 3RN10 is not intended for installation in potentially explosive atmospheres. If it needs to be installed in a potentially explosive atmosphere, the 3RN1 must be provided with a flameproof enclosure.
- Devices with AC/DC 24 V control voltage must be provided with electrical isolation in the form of a battery system or a safety isolating transformer in accordance with DIN VDE 0551.
- Devices with an "Auto RESET" function are automatically reset when the cooling time expires. In this case, an external interlock (latching with a separate ON/OFF button) must be provided to ensure that the monitored machine does not start up again independently.
- Devices with an "Auto RESET" function are not allowed to be used in applications where serious injury to persons or considerable damage to materials could ensue if the machine or plant starts up again unexpectedly.
- If a device without a short-circuit detection function is used, the sensor resistance must be measured with a suitable instrument when the machine or plant is started up as well as after all modifications or maintenance work (assembly/dismantling). The sensor circuit must be tested for short-circuiting if the resistance is < 50 ohms.
- If a *3RN1000* is used to protect EEx e motors, it is advisable to monitor the control voltage separately because there is **no** "Ready" LED to indicate that this voltage is present.
- If a *3RN1013-.BW01* is used to protect EEx e motors, it is advisable to monitor the control voltage separately because the output state of the auxiliary contact elements does not change (using bistable relays) if this voltage fails.

**For more information about the 3RN1, please consult the Siemens Low-Voltage Controlgear, Switchgear and Systems Catalogue or visit**
**http://www.ad.siemens.de/csi/cd**

KEMA

(1) # EG-BAUMUSTERPRÜFBESCHEINIGUNG

(2) **Geräte und Schutzsysteme zur bestimmungsgemäßen Verwendung in explosionsgefährdeten Bereichen – Richtlinie 94/9/EG**

(3) EG-Baumusterprüfbescheinigung Nummer: **KEMA 98ATEX1651 U** Ausgabe Nummer: **2**

(4) Komponente: **Durchgangs-Reihenklemmen UK 1,5 N; UK 3 N; UK 5 N und UK 6 N**

(5) Hersteller: **Phoenix Contact GmbH & Co. KG**

(6) Anschrift: **Flachsmarktstraße 8, D-32825 Blomberg, Deutschland**

(7) Die Bauart dieser Komponente sowie die verschiedenen zulässigen Ausführungen sind in der Anlage zu dieser EG-Baumusterprüfbescheinigung und in den zugehörigen Unterlagen festgelegt.

(8) KEMA Quality B.V. bescheinigt als benannte Stelle Nr. 0344 nach Artikel 9 der Richtlinie 94/9/EG des Rates der Europäischen Gemeinschaften vom 23. März 1994, die Erfüllung der grundlegenden Sicherheits- und Gesundheitsanforderungen für die Konzeption und den Bau von Geräten und Schutzsystemen zur bestimmungsgemäßen Verwendung in explosionsgefährdeten Bereichen gemäß Anhang II der Richtlinie.

Die Ergebnisse der Prüfung sind im vertraulichen Prüfbericht Nr. 2094047 festgelegt worden.

(9) Die grundlegenden Sicherheits- und Gesundheitsanforderungen werden erfüllt durch Übereinstimmung mit:

**EN 60079-0 : 2004** **EN 60079-7 : 2003** **EN 50281-1-1 : 1998 + A1**

(10) Das Zeichen "U" hinter der Bescheinigungsnummer zeigt an, daß diese Bescheinigung Komponenten beschreibt und nicht mit einer Bescheinigung für ein Gerät oder Schutzsystem verwechselt werden darf. Diese EG-Baumusterprüfbescheinigung dient lediglich als Grundlage zur Bescheinigung eines Geräts oder Schutzsystems.

(11) Diese EG-Baumusterprüfbescheinigung bezieht sich nur auf Konstruktion, Überprüfung und Tests der spezifizierten Komponente in Übereinstimmung mit Richtlinie 94/9/EG. Weitere Anforderungen der Richtlinie gelten für das Herstellungsverfahren und die Lieferung dieser Komponente. Diese sind von vorliegender Bescheinigung nicht abgedeckt.

(12) Die Kennzeichnung der Komponente muß die folgenden Angaben enthalten:

**II 2 G D** **Ex e II**

Diese Bescheinigung ist erstellt am 26. September 2006 und ist, soweit zutreffend, zu revidieren vor dem Datum der Beendigung der Annahme der Konformitätsvermutung (einer) der oben erwähnten Normen, wie angekündigt im Amtsblatt der Europäischen Union.

KEMA Quality B.V.

C.G. van Es
Certification Manager



PRODUCTS RvAC 001

© Integrale Veröffentlichung dieser Bescheinigung und zugehörigen Prüfberichte ist erlaubt. Diese Bescheinigung darf nur ungekürzt und unverändert vervielfältigt werden.

KEMA Quality B.V. Utrechtseweg 310, 6812 AR Arnhem Postfach 5185, 6802 ED Arnhem Niederlande
T +31 26 3 56 20 00 F +31 26 3 52 58 00 customer@kema.com www.kema.com Registriert Arnhem 09085396

(13) **ANLAGE**

(14) **zur EG-Baumusterprüfbescheinigung KEMA 98ATEX1651 U** Ausgabe Nr. **2**

(15) **Beschreibung**

Die Durchgangs-Reihenklemmen (alle Farben) UK 1,5 N; UK 3 N; UK 5 N und UK 6 N mit Zubehör dienen zum Anschließen oder Verbinden von Kupferleitern in Gehäusen der Zündschutzart Erhöhte Sicherheit "e" oder "D" (Staub). Die Montage erfolgt auf Tragschienen Typ NS 32 nach EN 60715-G 32 oder Typ NS 35 nach EN 60715-TH 35.

Einsatztemperaturbereich -50 °C ... +110 °C.

**Elektrische Daten**

Durchgangs-Reihenklemmen

| **Typ:** | **UK 1,5 N** | **UK 3 N** |
|---|---|---|
| Bemessungsisolationsspannung [V] | 320 | 630 |
| Bemessungsspannung [V] | 352 | 690 |
| - bei überspringender Brückung [V] | 69 | 176 |
| Nennstrom [A] | 17 | 23 |
| Max. Belastungsstrom [A] | 17 | 29 |
| bei Querverbindung | | |
| - Bemessungsquerschnitt mit FB [A] | 16 | 18 |
| - max. Leiterquerschnitt mit FB [A] | 16 | 24 |
| - Bemessungsquerschnitt mit EB [A] | - | 20 |
| - max. Leiterquerschnitt mit EB [A] | - | 23 |
| Bemessungsquerschnitt [mm²] (AWG) | 1,5 (16) | 2,5 (14) |
| Anschließbare Leiterquerschnitte | | |
| - starr [mm²] (AWG) | 0,14-1,5 (26-16) | 0,2-4 (24-12) |
| - flexibel [mm²] (AWG) | 0,14-1,5 (26-16) | 0,2-2,5 (24-14) |
| Mehrleiteranschluss (2 Leiter gleichen Querschnitts und gleicher Leiterart) | | |
| - starr [mm²] (AWG) | 0,14-0,75 (26-18) | 0,2-1,5 (24-16) |
| - flexibel [mm²] (AWG) | 0,14-0,75 (26-18) | 0,2-1,5 (24-16) |

| **Typ:** | **UK 5 N** | | **UK 6 N** |
|---|---|---|---|
| Montage auf Trageschiene | NS 35 | NS 32 | |
| Bemessungsisolationsspannung [V] | 630 | 500 | 630 |
| Bemessungsspannung [V] | 690 | 550 | 690 |
| - bei überspringender Brückung [V] | 176 | | 176 |
| Nennstrom [A] | 32,5 | | 43,5 |
| Max. Belastungsstrom [A] | 37,5 | | 58,5 |
| bei Querverbindung | | | |
| - Bemessungsquerschnitt mit FB(I)/FB150 [A] | 30/26 | | 39,5 |
| - max. Leiterquerschnitt mit FB(I)/FB150 [A] | 34/31 | | 52,5 |
| - Bemessungsquerschnitt mit KB/KBI [A] | 27 | | - |
| - max. Leiterquerschnitt mit KB/KBI [A] | 32 | | - |
| Bemessungsquerschnitt [mm²] (AWG) | 4 (12) | | 6 (10) |
| Anschließbare Leiterquerschnitte | | | |
| - starr [mm²] (AWG) | 0,2-6 (24-10) | | 0,2-10 (24-8) |
| - flexibel [mm²] (AWG) | 0,2-4 (24-12) | | 0,2-6 (24-10) |
| Mehrleiteranschluss (2 Leiter gleichen Querschnitts und gleicher Leiterart) | | | |
| - starr [mm²] (AWG) | 0,2-1,5 (24-16) | | 0,2-1,5 (24-16) |
| - flexibel [mm²] (AWG) | 0,2-1,5 (24-16) | | 0,2-1,5 (24-16) |

(13) **ANLAGE**

(14) **zur EG-Baumusterprüfbescheinigung KEMA 98ATEX1651 U** Ausgabe Nr. **2**

**Errichtungshinweise**

Die Durchgangs-Reihenklemmen sind geeignet zum Einsatz in Gehäusen zur Verwendung in Bereichen mit brennbaren Gasen oder brennbarem Staub. Für brennbare Gase müssen die Gehäuse den Anforderungen gemäß EN 60079-0 und EN 60079-7 entsprechen. Für brennbaren Staub müssen die Gehäuse den Anforderungen gemäß EN 50281-1-1 entsprechen.

Bei Mischung mit anderen bescheinigten Baureihen und -größen und bei Verwendung von deren Zubehör ist auf die Einhaltung der erforderlichen Luft- und Kriechstrecken zu achten.

Bezüglich der Verwendung von Abschlussplatten, Querverbindungen und Endhaltern sind die Anweisungen des Herstellers zu beachten.

Bei Verwendung von Leitern mit Querschnitten kleiner als Nennquerschnitt ist der zugehörige niedrigere Strom in der EG-Baumusterprüfbescheinigung des vollständigen Gerätes festzulegen.

Die Durchgangs-Reihenklemmen dürfen auf Grund der betriebsmäßigen Eigenerwärmung bei dem Nennstrom und bei Umgebungstemperaturen von -50 °C bis +40 °C an der Einbaustelle in Betriebsmitteln, vorwiegend in Abzweig- und Verbindungskästen, für die Temperaturklasse T6 eingesetzt werden. Bei Einsatz der Reihenklemmen in Betriebsmitteln der Temperaturklassen T1 bis zu T5 ist sicherzustellen, dass die höchste Temperatur an den Isolationsteilen den Höchstwert des Einsatztemperaturbereiches nicht überschreitet.

**Stückprüfungen**

Es sind Stückprüfungen in Form einer Spannungsprüfung gemäß EN 60079-7, Abschnitt 7.2 in Verbindung mit Abschnitt 6.1 durchzuführen.

(16) **Prüfbericht**

KEMA Nr. 2094047.

(17) **Besondere Bedingungen**

Keine.

(18) **Grundlegende Sicherheits- und Gesundheitsanforderungen**

Von den Normen unter (9) abgedeckt.

(19) **Prüfungsunterlagen**

Wie erwähnt im Prüfbericht Nr. 2094047.

Translation, original language: German

(1) # EC-TYPE EXAMINATION CERTIFICATE

(2) **Equipment and protective systems intended for use in potentially explosive atmospheres - Directive 94/9/EC**

(3) EC-Type Examination Certificate Number: **KEMA 98ATEX1651 U** Issue Number: **2**

(4) Component: **Terminal Blocks**
**UK 1,5 N ; UK 3 N; UK 5 N and UK 6 N**

(5) Manufacturer: **Phoenix Contact GmbH & Co. KG**

(6) Address: **Flachsmarktstraße 8, D-32825 Blomberg, Germany**

(7) This component and any acceptable variation thereto is specified in the schedule to this certificate and the documents therein referred to.

(8) KEMA Quality B.V., notified body number 0344 in accordance with Article 9 of the Council Directive 94/9/EC of 23 March 1994, certifies that this component has been found to comply with the Essential Health and Safety Requirements relating to the design and construction of equipment and protective systems intended for use in potentially explosive atmospheres given in Annex II to the directive.

The examination and test results are recorded in confidential report no. 2094047.

(9) Compliance with the Essential Health and Safety Requirements has been assured by compliance with:

**EN 60079-0 : 2004** **EN 60079-7 : 2003** **EN 50281-1-1 : 1998 + A1**

(10) The sign "U" placed after the certificate number indicates that this certificate describes components and must not be mistaken for a certificate intended for an equipment or protective system. This EC-Type Examination Certificate may be used as a basis for certification of an equipment or protective system.

(11) This EC-Type Examination Certificate relates only to the design, examination and tests of the specified component according to the Directive 94/9/EC. Further requirements of the directive apply to the manufacturing process and supply of this component. These are not covered by this certificate.

(12) The marking of the component shall include the following:

**II 2 G D** **Ex e II**

This certificate is issued on 26 September 2006 and, as far as applicable, shall be revised before the date of cessation of presumption of conformity of (one of) the standards mentioned above as communicated in the Official Journal of the European Union.

KEMA Quality B.V.

C.G. van Es
Certification Manager



PRODUCTS RvAC 001

© Integral publication of this certificate and adjoining reports is allowed. This Certificate may only be reproduced in its entirety and without any change.

KEMA Quality B.V. Utrechtseweg 310, 6812 AR Arnhem P.O. Box 5185, 6802 ED Arnhem, The Netherlands
T +31 26 3 56 20 00 F +31 26 3 52 58 00 customer@kema.com www.kema.com Registered Arnhem 09085396

(13) # SCHEDULE

(14) **to EC-Type Examination Certificate KEMA 98ATEX1651 U** Issue No. **2**

(15) **Description**

The Terminal Blocks (all colours) UK 1,5 N; UK 3 N; UK 5 N and UK 6 N with accessories, are intended for the connection of copper conductors in enclosures in type of protection increased safety "e" or "D" (dust). Fixing is made on mounting rails type NS 32 according to EN 60715-G 32 or type NS 35 according to EN 60715-TH 35.

Operating temperature range -50 °C ... +110 °C.

**Electrical data**

Terminal blocks

| **Type:** | **UK 1,5 N** | **UK 3 N** |
|---|---|---|
| Rated insulation voltage [V] | 320 | 630 |
| Rated voltage [V] | 352 | 690 |
| - with skipping jumper [V] | 69 | 176 |
| Nominal current [A] | 17 | 23 |
| Max. rated current [A] | 17 | 29 |
| With jumper | | |
| - rated cross section with FB [A] | 16 | 18 |
| - max. conductor cross section with FB [A] | 16 | 24 |
| - rated cross section with EB [A] | - | 20 |
| - max. conductor cross section with EB [A] | - | 23 |
| Rated cross section [mm²] (AWG) | 1,5 (16) | 2,5 (14) |
| Connectable conductor cross section | | |
| - rigid [mm²] (AWG) | 0,14-1,5 (26-16) | 0,2-4 (24-12) |
| - flexible [mm²] (AWG) | 0,14-1,5 (26-16) | 0,2-2,5 (24-14) |
| Multi-conductor connection (two conductor with the same cross section and conductor type) | | |
| - rigid [mm²] (AWG) | 0,14-0,75 (26-18) | 0,2-1,5 (24-16) |
| - flexible [mm²] (AWG) | 0,14-0,75 (26-18) | 0,2-1,5 (24-16) |

| **Type:** | **UK 5 N** | | **UK 6 N** |
|---|---|---|---|
| assembled on mounting rail | NS 35 | NS 32 | |
| Rated insulation voltage [V] | 630 | 500 | 630 |
| Rated voltage [V] | 690 | 550 | 690 |
| - with skipping jumper [V] | 176 | | 176 |
| Nominal current [A] | 32,5 | | 43,5 |
| Max. rated current [A] | 37,5 | | 58,5 |
| With jumper | | | |
| - rated cross section with FB(I)/FB150 [A] | 30/26 | | 39,5 |
| - max. conductor cross section with FB(I)/FB150 [A] | 34/31 | | 52,5 |
| - rated cross section with KB/KBI [A] | 27 | | - |
| - max. conductor cross section with KB/KBI [A] | 32 | | - |
| Rated cross section [mm²] (AWG) | 4 (12) | | 6 (10) |
| Connectable conductor cross section | | | |
| - rigid [mm²] (AWG) | 0,2-6 (24-10) | | 0,2-10 (24-8) |
| - flexible [mm²] (AWG) | 0,2-4 (24-12) | | 0,2-6 (24-10) |
| Multi-conductor connection (two conductor with the same cross section and conductor type) | | | |
| - rigid [mm²] (AWG) | 0,2-1,5 (24-16) | | 0,2-1,5 (24-16) |
| - flexible [mm²] (AWG) | 0,2-1,5 (24-16) | | 0,2-1,5 (24-16) |

(13) # SCHEDULE

(14) **to EC-Type Examination Certificate KEMA 98ATEX1651 U** Issue No. **2**

**Installation instructions**

The Terminal Blocks are suitable for use in enclosures in atmospheres with flammable gases or combustible dust. For flammable gases these enclosures must satisfy the requirements according to EN 60079-0 and EN 60079-7. For combustible dust these enclosures must satisfy the requirements according to EN 50281-1-1.

When assembling with other certified series and sizes and when using belonging accessories, the required creepage distances and clearances have to be observed.

Regarding the use of covers, cross-connectors (jumpers) and end brackets the instructions of the manufacturer must be followed.

If conductors with smaller cross sections as the rated cross section are used, the belonging lower current has to be laid down in the EC-Type Examination Certificate of the complete apparatus.

The Terminal Blocks may be used, based on the self-heating when used at the nominal current and at ambient temperatures of -50 °C to +40 °C at the mounting position in electrical apparatus, e.g. connection and junction boxes, for temperature class T6. When the Terminal Blocks are used in electrical apparatus of temperature classes T1 up to T5, the highest temperature of the insulating material shall not exceed the maximum value of the operating temperature range.

**Routine tests**

Routine dielectric strength tests according to EN 60079-7, Clause 7.2 in combination with Clause 6.1, have to be carried out.

(16) **Report**

KEMA No. 2094047.

(17) **Special conditions for safe use**

None.

(18) **Essential Health and Safety Requirements**

Covered by the standards listed at (9).

(19) **Test documentation**

As listed in Test Report No. 2094047.

Doc No: 112600-1

# (1) EG-BAUMUSTERPRÜFBESCHEINIGUNG

(2) **Geräte und Schutzsysteme zur bestimmungsgemäßen Verwendung in explosionsgefährdeten Bereichen – Richtlinie 94/9/EG**

(3) EG-Baumusterprüfbescheinigung Nummer: **KEMA 97ATEX1622 U**

(4) Komponent: **Schutzleiter-Reihenklemmen USLKG 3 (-1)**

(5) Hersteller: **Phoenix Contact GmbH & Co. KG**

(6) Anschrift: **Flachsmarktstraße 8, D-32825 Blomberg, Deutschland**

(7) Die Bauart dieser Komponent sowie die verschiedenen zulässigen Ausführungen sind in der Anlage zu dieser EG-Baumusterprüfbescheinigung und in den zugehörigen Unterlagen festgelegt.

(8) KEMA Quality B.V. bescheinigt als benannte Stelle Nr. 0344 nach Artikel 9 der Richtlinie 94/9/EG des Rates der Europäischen Gemeinschaften vom 23. März 1994, die Erfüllung der grundlegenden Sicherheits- und Gesundheitsanforderungen für die Konzeption und den Bau von Geräten und Schutzsystemen zur bestimmungsgemäßen Verwendung in explosionsgefährdeten Bereichen gemäß Anhang II der Richtlinie.

Die Ergebnisse der Prüfung sind im vertraulichen Prüfbericht Nr. 2092655 festgelegt worden.

(9) Die grundlegenden Sicherheits- und Gesundheitsanforderungen werden erfüllt durch Übereinstimmung mit:

**EN 60079-0 : 2004** **EN 60079-7 : 2003** **EN 50281-1-1 : 1998 + A1**

(10) Das Zeichen "U" hinter der Bescheinigungsnummer zeigt an, daß diese Bescheinigung Komponenten beschreibt und nicht mit einer Bescheinigung für ein Gerät oder Schutzsystem verwechselt werden darf. Diese EG-Baumusterprüfbescheinigung dient lediglich als Grundlage zur Bescheinigung eines Geräts oder Schutzsystems.

(11) Diese EG-Baumusterprüfbescheinigung bezieht sich nur auf Konstruktion, Überprüfung und Tests der spezifizierten Komponente in Übereinstimmung mit Richtlinie 94/9/EG. Weitere Anforderungen der Richtlinie gelten für das Herstellungsverfahren und die Lieferung dieser Komponente. Diese sind von vorliegender Bescheinigung nicht abgedeckt.

(12) Die Kennzeichnung der Komponente muß die folgenden Angaben enthalten:

**II 2 G D Ex e II**

Arnhem, den 22. Mai 2006
KEMA Quality B.V.

T. Pijpker
Certification Manager

Neuausgabe
Seite 1/3

PRODUCTS RvAC 001

© Integrale Veröffentlichung dieser Bescheinigung und zugehörigen Prüfberichte ist erlaubt.. Diese Bescheinigung darf nur ungekürzt und unverändert vervielfältigt werden.

KEMA Quality B.V. Utrechtseweg 310, 6812 AR Arnhem Postfach 5185, 6802 ED Arnhem Niederlande
T +31 26 3 56 20 00 F +31 26 3 52 58 00 customer@kema.com www.kema.com Registriert Arnhem 09085396

(13) **ANLAGE**

(14) **zur EG-Baumusterprüfbescheinigung KEMA 97ATEX1622 U**

(15) **Beschreibung**

Die Schutzleiter-Reihenklemme USLKG 3 (-1) dient zum Anschließen oder Verbinden von Kupferleitungen in Gehäusen der Zündschutzart Erhöhte Sicherheit "e" oder "D" (Staub). Die Montage erfolgt auf Tragschienen Typ NS 32 nach EN 60715, G-schienenprofil G32 oder NS 35 nach EN 60715, Hutschienenprofil TH 35.

Einsatztemperaturbereich: -50 °C ... +110 °C.

**Elektrische Daten**

| **Typ:** | **USLKG 3 (-1)** |
|---|---|
| Bemessungsquerschnitt [mm²] (AWG) | 2,5 (14) |
| Anschließbare Leiterquerschnitte | |
| - starr [mm²] (AWG) | 0,2 - 4 (24 - 12) |
| - flexibel [mm²] (AWG) | 0,2 - 2,5 (24 - 14) |

**Errichtungshinweise**

Die Schutzleiter-Reihenklemme ist geeignet zum Einsatz in Gehäusen zur Verwendung in Bereichen mit brennbaren Gasen oder brennbarem Staub. Für brennbare Gase müssen die Gehäuse den Anforderungen gemäß EN 60079-0 und EN 60079-7 entsprechen. Für brennbaren Staub müssen die Gehäuse den Anforderungen gemäß EN 50281-1-1 entsprechen.

Bei Aneinanderreihung mit den Durchgangs-Reihenklemmen werden die geforderten Luft- und Kriechstrecken für die nachfolgend aufgeführten Bemessungsspannungen nach EN 60079-7 eingehalten:

| **Durchgangs-Reihenklemmen** | **Zertifikatnummer** | **Schutzleiter-Reihenklemmen** | **Bemessungsspannung** |
|---|---|---|---|
| UK 3 N | KEMA 98ATEX1651U | USLKG 3 (-1) | 690 V |

Bei Mischung mit anderen bescheinigten Baureihen und -größen und Verwendung von deren Zubehör ist auf die Einhaltung der erforderlichen Luft- und Kriechstrecken zu achten.

Bezüglich der Verwendung von Abschlussplatten, Querverbindungen und Endhaltern sind die Anweisungen des Herstellers zu beachten.

Die Schutzleiter-Reihenklemme darf bei Umgebungstemperaturen von -50 °C bis +40 °C an der Einbaustelle in Betriebsmitteln, vorwiegend in Abzweig- und Verbindungskästen, für die Temperaturklasse T6 eingesetzt werden. Bei Einsatz der Reihenklemmen in Betriebsmitteln der Temperaturklassen T1 bis zu T5 ist sicherzustellen, dass die höchste Temperatur an den Isolationsteilen den Höchstwert des Einsatztemperaturbereiches nicht überschreitet.

**Stückprüfungen**

Es sind Stückprüfungen in Form einer Spannungsprüfung gemäß EN 60079-7, Abschnitt 7.2 in Verbindung mit Abschnitt 6.1 durchzuführen.

(13) **ANLAGE**

(14) **zur EG-Baumusterprüfbescheinigung KEMA 97ATEX1622 U**

(16) **Prüfbericht**

KEMA Nr. 2092655.

(17) **Besondere Bedingungen**

Keine.

(18) **Grundlegende Sicherheits- und Gesundheitsanforderungen**

Von den Normen unter (9) abgedeckt.

(19) **Prüfungsunterlagen**

Wie erwähnt in Prüfbericht Nr. 2092655.

Translation, original language: German

(1) # EC-TYPE EXAMINATION CERTIFICATE

(2) **Equipment and protective systems intended for use in potentially explosive atmospheres - Directive 94/9/EC**

(3) EC-Type Examination Certificate Number: **KEMA 97ATEX1622 U**

(4) Component: **Protective Conductor Terminal Blocks USLKG 3 (-1)**

(5) Manufacturer: **Phoenix Contact GmbH & Co. KG**

(6) Address: **Flachsmarktstraße 8, D-32825 Blomberg, Germany.**

(7) This component and any acceptable variation thereto is specified in the schedule to this certificate and the documents therein referred to.

(8) KEMA Quality B.V., notified body number 0344 in accordance with Article 9 of the Council Directive 94/9/EC of 23 March 1994, certifies that this component has been found to comply with the Essential Health and Safety Requirements relating to the design and construction of equipment and protective systems intended for use in potentially explosive atmospheres given in Annex II to the directive.

The examination and test results are recorded in confidential report no. 2092655.

(9) Compliance with the Essential Health and Safety Requirements has been assured by compliance with:

**EN 60079-0 : 2004** **EN 60079-7 : 2003** **EN 50281-1-1 : 1998 + A1**

(10) The sign "U" placed after the certificate number indicates that this certificate describes components and must not be mistaken for a certificate intended for an equipment or protective system. This EC-Type Examination Certificate may be used as a basis for certification of an equipment or protective system.

(11) This EC-Type Examination Certificate relates only to the design, examination and tests of the specified component according to the Directive 94/9/EC. Further requirements of the directive apply to the manufacturing process and supply of this component. These are not covered by this certificate.

(12) The marking of the component shall include the following:

**II 2 G D Ex e II**

Arnhem, 22 May 2006
KEMA Quality B.V.

T. Pijpker
Certification Manager

Re-issued


PRODUCTS RvA C 001

© Integral publication of this certificate and adjoining reports is allowed. This Certificate may only be reproduced in its entirety and without any change.

KEMA Quality B.V. Utrechtseweg 310, 6812 AR Arnhem P.O. Box 5185, 6802 ED Arnhem The Netherlands
T +31 26 3 56 20 00 F +31 26 3 52 58 00 customer@kema.com www.kema.com Registered Arnhem 09085396

(13) # SCHEDULE

(14) **to EC-Type Examination Certificate KEMA 97ATEX1622 U**

(15) **Description**

The Protective Conductor Terminal Block USLKG 3 (-1) for the connection of copper conductors in enclosures in type of protection increased safety "e" or "D" (dust), for fixing on mounting rails type NS 32 acc. to EN 60715, G-section rail G 32 or NS 35 acc. to EN 60715, Top hat section rail TH 35.

Operating temperature range: -50 °C ... +110 °C.

**Electrical data**

| **Type:** | **USLKG 3 (-1)** |
|---|---|
| Rated cross-section [mm²] (AWG) | 2,5 (14) |
| Connectable conductor cross-section | |
| - rigid [mm²] (AWG) | 0,2 - 4 (24 - 12) |
| - flexible [mm²] (AWG) | 0,2 - 2,5 (24 - 14) |

**Installation instructions**

The Protective Conductor Terminal Block is suitable for use in enclosures in atmospheres with flammable gases or combustible dust. For flammable gases these enclosures must satisfy the requirements according to EN 60079-0 and EN 60079-7. For combustible dust these enclosures must satisfy the requirements according to EN 50281-1-1.

In combination with the Terminal Blocks the required clearances and creepage distances are kept for the rated voltages according to EN 60079-7 as listed below:

| **Terminal Blocks** | **Certificate number** | **Protective conductor terminal blocks** | **Rated voltage** |
|---|---|---|---|
| UK 3 N | KEMA 98ATEX1651U | USLKG 3 (-1) | 690 V |

When assembling with other certified series and sizes and using belonging accessories, the required creepage distances and clearances have to be observed.

Regarding the use of covers, cross-connectors and end brackets the instructions of the manufacturer must be followed.

The Protective Conductor Terminal Block may be used at ambient temperatures of -50 °C to +40 °C at the mounting position in electrical apparatus, e.g. junction and connection boxes, for temperature class T6. When the Terminal Blocks are used in electrical apparatus of temperature classes T1 up to T5, the highest temperature of the insulating material shall not exceed the maximum value of the operating temperature range.

**Routine tests**

Routine dielectric strength tests according to EN 60079-7, Clause 7.2 in combination with Clause 6.1, have to be carried out.

(13) # SCHEDULE

(14) **to EC-Type Examination Certificate KEMA 97ATEX1622 U**

(16) **Report**

KEMA No. 2092655.

(17) **Special conditions for safe use**

None.

(18) **Essential Health and Safety Requirements**

Covered by the standards listed at (9).

(19) **Test documentation**

As listed in Test Report No. 2092655.

Translation, original language: German

(1) # EC-TYPE EXAMINATION CERTIFICATE

(2) **Equipment and protective systems intended for use in potentially explosive atmospheres - Directive 94/9/EC**

(3) EC-Type Examination Certificate Number: **KEMA 96ATEX4370 U**

(4) Component: **Protective Conductor Terminal Blocks USLKG 2,5 N (-1)**
**USLKG 6 N (-1)**

(5) Manufacturer: **Phoenix Contact GmbH & Co. KG**

(6) Address: **Flachsmarktstraße 8, D-32825 Blomberg, Germany.**

(7) This component and any acceptable variation thereto is specified in the schedule to this certificate and the documents therein referred to.

(8) KEMA Quality B.V., notified body number 0344 in accordance with Article 9 of the Council Directive 94/9/EC of 23 March 1994, certifies that this component has been found to comply with the Essential Health and Safety Requirements relating to the design and construction of equipment and protective systems intended for use in potentially explosive atmospheres given in Annex II to the directive.

The examination and test results are recorded in confidential report no. 2092655.

(9) Compliance with the Essential Health and Safety Requirements has been assured by compliance with:

**EN 60079-0 : 2004** **EN 60079-7 : 2003** **EN 50281-1-1 : 1998 + A1**

(10) The sign "U" placed after the certificate number indicates that this certificate describes components and must not be mistaken for a certificate intended for an equipment or protective system. This EC-Type Examination Certificate may be used as a basis for certification of an equipment or protective system.

(11) This EC-Type Examination Certificate relates only to the design, examination and tests of the specified component according to the Directive 94/9/EC. Further requirements of the directive apply to the manufacturing process and supply of this component. These are not covered by this certificate.

(12) The marking of the component shall include the following:

**II 2 G D Ex e II**

Arnhem, 22 May 2006
KEMA Quality B.V.

T. Pijpker
Certification Manager

Re-issued


PRODUCTS RvA C 001

© Integral publication of this certificate and adjoining reports is allowed. This Certificate may only be reproduced in its entirety and without any change.

KEMA Quality B.V. Utrechtseweg 310, 6812 AR Arnhem P.O. Box 5185, 6802 ED Arnhem The Netherlands
T +31 26 3 56 20 00 F +31 26 3 52 58 00 customer@kema.com www.kema.com Registered Arnhem 09085396

(13) # SCHEDULE

(14) **to EC-Type Examination Certificate KEMA 96ATEX4370 U**

(15) **Description**

The Protective Conductor Terminal Blocks USLKG 2,5 N (-1) and USLKG 6 N (-1) for the connection of copper conductors in enclosures in type of protection increased safety "e" or "D" (dust), for fixing on mounting rails type NS 32 acc. to EN 60715, G-section rail G 32 or NS 35 acc. to EN 60715, Top hat section rail TH 35.

Operating temperature range: -50 °C ... +110 °C.

**Electrical data**

| **Type:** | **USLKG 2,5 N (-1)** | **USLKG 6 N (-1)** |
|---|---|---|
| Rated cross-section [mm²] (AWG) | 2,5 (14) | 6 (10) |
| Connectable conductor cross-section | | |
| - rigid [mm²] (AWG) | 0,2 - 4 (24 - 12) | 0,2 - 10 (24 - 8) |
| - flexible [mm²] (AWG) | 0,2 - 2,5 (24 - 14) | 0,2 - 6 (24 - 10) |

**Installation instructions**

The Protective Conductor Terminal Blocks are suitable for use in enclosures in atmospheres with flammable gases or combustible dust. For flammable gases these enclosures must satisfy the requirements according to EN 60079-0 and EN 60079-7. For combustible dust these enclosures must satisfy the requirements according to EN 50281-1-1.

In combination with the Terminal Blocks the required clearances and creepage distances are kept for the rated voltages according to EN 60079-7 as listed below:

| **Terminal Blocks** | **Certificate number** | **Protective conductor terminal blocks** | **Rated voltage** |
|---|---|---|---|
| UK 2,5 N | KEMA 06ATEX0119U | USLKG 2,5 N (-1) | 550 V |
| UK 6 N | KEMA 98ATEX1651U | USLKG 6 N (-1) | 690 V |

When assembling with other certified series and sizes and using belonging accessories, the required creepage distances and clearances have to be observed.

Regarding the use of covers, cross-connectors and end brackets the instructions of the manufacturer must be followed.

The Protective Conductor Terminal Blocks may be used at ambient temperatures of -50 °C to +40 °C at the mounting position in electrical apparatus, e.g. junction and connection boxes, for temperature class T6. When the Terminal Blocks are used in electrical apparatus of temperature classes T1 up to T5, the highest temperature of the insulating material shall not exceed the maximum value of the operating temperature range.

**Routine tests**

Routine dielectric strength tests according to EN 60079-7, Clause 7.2 in combination with Clause 6.1, have to be carried out.

(13) # SCHEDULE

(14) **to EC-Type Examination Certificate KEMA 96ATEX4370 U**

(16) **Report**

KEMA No. 2092655.

(17) **Special conditions for safe use**

None.

(18) **Essential Health and Safety Requirements**

Covered by the standards listed at (9).

(19) **Test documentation**

As listed in Test Report No. 2092655.

(1) # EG-BAUMUSTERPRÜFBESCHEINIGUNG

(2) **Geräte und Schutzsysteme zur bestimmungsgemäßen Verwendung in explosionsgefährdeten Bereichen – Richtlinie 94/9/EG**

(3) EG-Baumusterprüfbescheinigung Nummer: **KEMA 96ATEX4370 U**

(4) Komponente: **Schutzleiter-Reihenklemmen USLKG 2,5 N (-1)**
**USLKG 6 N (-1)**

(5) Hersteller: **Phoenix Contact GmbH & Co. KG**

(6) Anschrift: **Flachsmarktstraße 8, D-32825 Blomberg, Deutschland**

(7) Die Bauart dieser Komponent sowie die verschiedenen zulässigen Ausführungen sind in der Anlage zu dieser EG-Baumusterprüfbescheinigung und in den zugehörigen Unterlagen festgelegt.

(8) KEMA Quality B.V. bescheinigt als benannte Stelle Nr. 0344 nach Artikel 9 der Richtlinie 94/9/EG des Rates der Europäischen Gemeinschaften vom 23. März 1994, die Erfüllung der grundlegenden Sicherheits- und Gesundheitsanforderungen für die Konzeption und den Bau von Geräten und Schutzsystemen zur bestimmungsgemäßen Verwendung in explosionsgefährdeten Bereichen gemäß Anhang II der Richtlinie.

Die Ergebnisse der Prüfung sind im vertraulichen Prüfbericht Nr. 2092655 festgelegt worden.

(9) Die grundlegenden Sicherheits- und Gesundheitsanforderungen werden erfüllt durch Übereinstimmung mit:

**EN 60079-0 : 2004** **EN 60079-7 : 2003** **EN 50281-1-1 : 1998 + A1**

(10) Das Zeichen "U" hinter der Bescheinigungsnummer zeigt an, daß diese Bescheinigung Komponenten beschreibt und nicht mit einer Bescheinigung für ein Gerät oder Schutzsystem verwechselt werden darf. Diese EG-Baumusterprüfbescheinigung dient lediglich als Grundlage zur Bescheinigung eines Geräts oder Schutzsystems.

(11) Diese EG-Baumusterprüfbescheinigung bezieht sich nur auf Konstruktion, Überprüfung und Tests der spezifizierten Komponente in Übereinstimmung mit Richtlinie 94/9/EG. Weitere Anforderungen der Richtlinie gelten für das Herstellungsverfahren und die Lieferung dieser Komponente. Diese sind von vorliegender Bescheinigung nicht abgedeckt.

(12) Die Kennzeichnung der Komponente muß die folgenden Angaben enthalten:

**II 2 G D Ex e II**

Arnhem, den 22. Mai 2006
KEMA Quality B.V.

T. Pijpker
Certification Manager

Neuausgabe
Seite 1/3

PRODUCTS
RvA C 001

© Integrale Veröffentlichung dieser Bescheinigung und zugehörigen Prüfberichte ist erlaubt.. Diese Bescheinigung darf nur ungekürzt und unverändert vervielfältigt werden.

KEMA Quality B.V. Utrechtseweg 310, 6812 AR Arnhem Postfach 5185, 6802 ED Arnhem Niederlande
T +31 26 3 56 20 00 F +31 26 3 52 58 00 customer@kema.com www.kema.com Registriert Arnhem 09085396

(13) **ANLAGE**

(14) **zur EG-Baumusterprüfbescheinigung KEMA 96ATEX4370 U**

(15) **Beschreibung**

Die Schutzleiter-Reihenklemmen USLKG 2,5 N (-1) und USLKG 6 N (-1) dienen zum Anschließen oder Verbinden von Kupferleitungen in Gehäusen der Zündschutzart Erhöhte Sicherheit "e" oder "D" (Staub). Die Montage erfolgt auf Tragschienen Typ NS 32 nach EN 60715, G-schienenprofil G 32 oder NS 35 nach EN 60715, Hutschienenprofil TH 35.

Einsatztemperaturbereich: -50 °C ... +110 °C.

**Elektrische Daten**

| **Typ:** | **USLKG 2,5 N (-1)** | **USLKG 6 N (-1)** |
|---|---|---|
| Bemessungsquerschnitt [mm²] (AWG) | 2,5 (14) | 6 (10) |
| Anschließbare Leiterquerschnitte | | |
| - starr [mm²] (AWG) | 0,2 - 4 (24 - 12) | 0,2 - 10 (24 - 8) |
| - flexibel [mm²] (AWG) | 0,2 - 2,5 (24 - 14) | 0,2 - 6 (24 - 10) |

**Errichtungshinweise**

Die Schutzleiter-Reihenklemmen sind geeignet zum Einsatz in Gehäusen zur Verwendung in Bereichen mit brennbaren Gasen oder brennbarem Staub. Für brennbare Gase müssen die Gehäuse den Anforderungen gemäß EN 60079-0 und EN 60079-7 entsprechen. Für brennbaren Staub müssen die Gehäuse den Anforderungen gemäß EN 50281-1-1 entsprechen.

Bei Aneinanderreihung mit den Durchgangs-Reihenklemmen werden die geforderten Luft- und Kriechstrecken für die nachfolgend aufgeführten Bemessungsspannungen nach EN 60079-7 eingehalten:

| **Durchgangs-Reihenklemmen** | **Zertifikatnummer** | **Schutzleiter-Reihenklemmen** | **Bemessungsspannung** |
|---|---|---|---|
| UK 2,5 N | KEMA 06ATEX0119U | USLKG 2,5 N (-1) | 550 V |
| UK 6 N | KEMA 98ATEX1651U | USLKG 6 N (-1) | 690 V |

Bei Mischung mit anderen bescheinigten Baureihen und -größen und Verwendung von deren Zubehör ist auf die Einhaltung der erforderlichen Luft- und Kriechstrecken zu achten.

Bezüglich der Verwendung von Abschlussplatten, Querverbindungen und Endhaltern sind die Anweisungen des Herstellers zu beachten.

Die Schutzleiter-Reihenklemmen durfen bei Umgebungstemperaturen von -50 °C bis +40 °C an der Einbaustelle in Betriebsmitteln, vorwiegend in Abzweig- und Verbindungskästen, für die Temperaturklasse T6 eingesetzt werden. Bei Einsatz der Reihenklemmen in Betriebsmitteln der Temperaturklassen T1 bis zu T5 ist sicherzustellen, dass die höchste Temperatur an den Isolationsteilen den Höchstwert des Einsatztemperaturbereiches nicht überschreitet.

**Stückprüfungen**

Es sind Stückprüfungen in Form einer Spannungsprüfung gemäß EN 60079-7, Abschnitt 7.2 in Verbindung mit Abschnitt 6.1 durchzuführen.

(13) **ANLAGE**

(14) **zur EG-Baumusterprüfbescheinigung KEMA 96ATEX4370 U**

(16) **Prüfbericht**

KEMA Nr. 2092655.

(17) **Besondere Bedingungen**

Keine.

(18) **Grundlegende Sicherheits- und Gesundheitsanforderungen**

Von den Normen unter (9) abgedeckt.

(19) **Prüfungsunterlagen**

Wie erwähnt in Prüfbericht Nr. 2092655.

# LIFTING TOWER

## (SERVOLIFT DOCUMENTATION)

Professional Milling and Handling of Powders

Voir classeur annexé.

Siehe beiliegender Ordner.

See additional binder.

Professional Milling and Handling of Powders

**Doc No: 136896-1**

SERVOLIFT

# Operating Instructions: Machine-Lifter (HM) 12552

***- Original Instructions -***

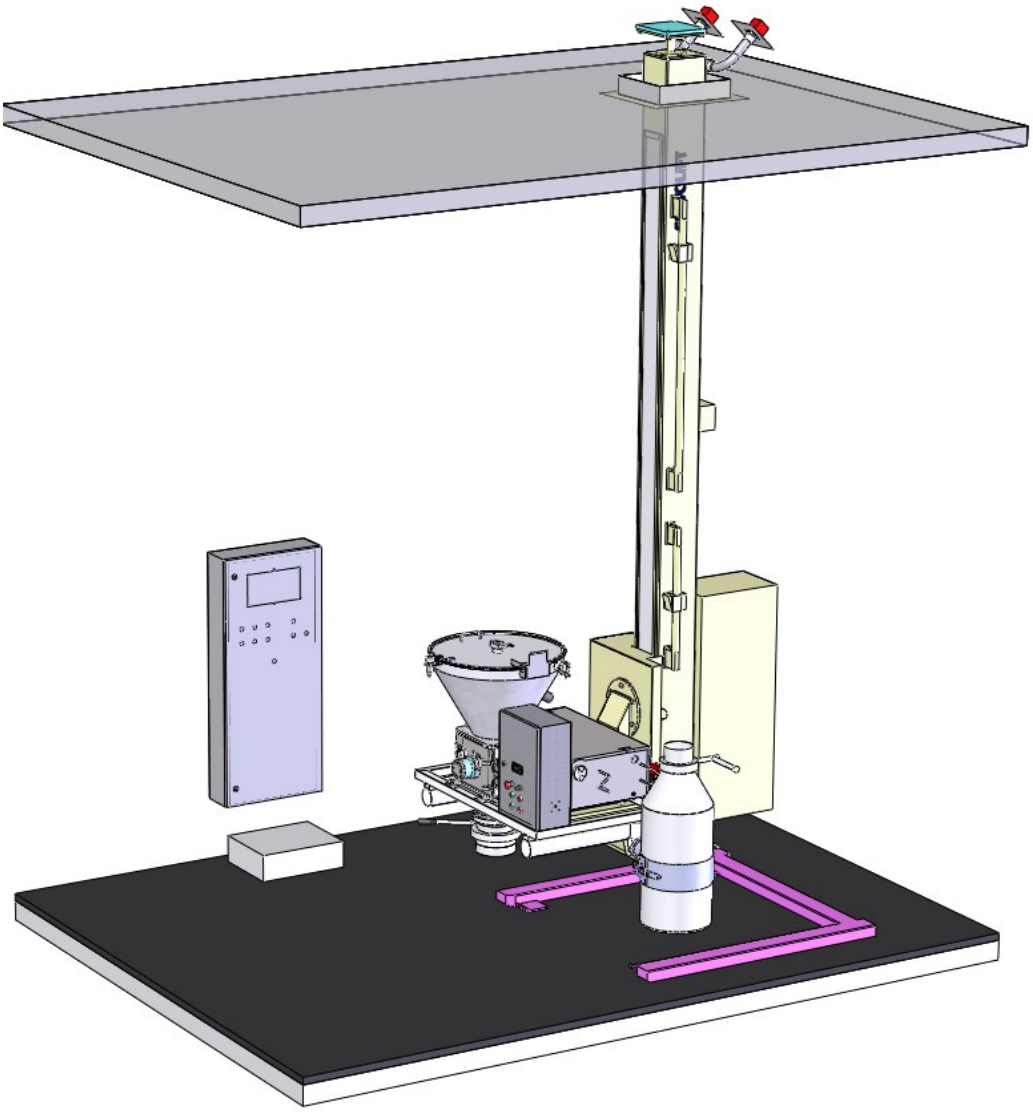


**Manufacturer:**

Servolift GmbH
Albert-Einstein-Strasse 9
77656 Offenburg
Deutschland

Tel.: +49 (0) 781-6100-0
Fax: +49 (0) 781-6100-99
email: sl@servolift.de
24h-service: +49 (0) 700 7 3 7 8 6 5 4 3 8
+49 (0) 700 S E R V O L I F T

**Customer:**

Frewitt Fabrique de machines SA
Route du Coteau 7
1763 Granges-Paccot
Schweiz

SERVOLIFT

# Index of Chapters


1. Description of Product
2. General Safety Advise
3. Transport
4. Installation
5. Commissioning
6. Control
7. Troubleshooting
8. Maintenance and Adjustment
9. Cleaning
10. Disposal
11. Drawings
12. Schemes and Parts Lists
13. Data sheets of Accessories and MSDS


*- Original Instructions -*

SERVOLIFT

## Index of Attachments

### 11. Drawings


General Arrangement Drawing ..... 12552-00-001/a

Assembly of Supporting Arm to Lift Slide ..... 04-39-003

4ifting cylinder plungertype, spare and wear parts ..... 00-41-101V

Declaration of Conformity for Machinery acc. Directive 2006/42/EC ..... SERVOLIFT

Declaration of Conformity for Explosion protection guidlines acc. 94/9/EC ..... SERVOLIFT


### 12. Schemes and Parts Lists


Hydraulic Scheme with Parts and Hose List..... 12552-61-001

Pneumatic Scheme with Parts List ..... 12552-62-001

Spare Parts List ..... 12551

Electric Scheme with Parts List ..... 12551


### 13. Data sheets of Accessories and MSDS


Product Information and Safety Data Bulletin of hydraulic oil ..... BIOLUBE 46

Product Information and Safety Data Bulletin of grease ..... SORAJA FM 372

Technical Information and Saftey Data Bulletin of anchors..... UPAT

Technical Information of automatic lubricator..... PERMA


- Original Instructions -

SERVOLIFT

# 1. Description of Product

## Table of Contents


**1. Description of Product 1**

1.1. Intended Use of the Machine ..... 2

1.2. Design ..... 3

1.2.1. Supporting arm ..... 4

1.2.2. Machine to be used ..... 5

1.3. Functional characteristic ..... 6

1.4. Operating elements ..... 6

1.5. Operation sequence ..... 7

1.5.1. Milling of API2 to small drum ..... 7

1.5.2. Discharge from small drum into IBC ..... 8

1.6. Technical Data ..... 9


- Original Instructions -

### 1.1. Intended Use of the Machine

The Machine is exclusively designed to carry and lift a sieving machine type MF3. If the sieving machine is taken out of support arm, the supporting arm can be inverted 180°. The maximum radius of inversion is limited to 880mm to prevent a collision with the wall.

Product can be discharged directly from the sieving machine into the presented drum. Lateral to the supporting frame of the sieving machine a manual invertible clamp shell is installed. Small drum of 378mm diameter can be clamped and discharged directly into a positioned container.

The machine lifter is controlled from a remote installed built-in panel via push button control.

It is only allowed to stress the lifter with a total weight of 250 kg including sieving machine and product

The machine not designed for other use as above listed – this applies as misuse of the machine.

**INFORMATION**

**The machine is intended to be used in a room! It is NOT suited for being operated under open air.**
**By installation of explosion proofed components, the machine is intended to be used within explosion hazardous atmosphere, classed: ATEX zone 22**



Especially we point out, that it is forbidden to:

- Lift and transport personnel.
- Climb up the unit.
- Stay under the load.
- Be present within the direct working area during operation of the machine.
- Lift up loads with other parts than the provided load suspension devices.
- Put the unit into operation, if any fault is notified.
- Modify the unit without the expressly written confirmation of the manufacturer.
- By pass or remove any of the installed interlocks and safety installations.
- Use other loads than shown below.
- Use damaged loads, specially at the load suspension points.

**DANGER**

**Operation of the machine.**
Vital wounds, death and or damage to machinery.

- The machine must only be operated / used according to its intended use
- It is imperative that all safety precautions be observed, in this operation instruction and at the machine

**INFORMATION**

**This manual does not contain all safety information.**
**Depending on local regulations and legal provisions at site, further safety measures might be necessary.**
**Indication to health hazard caused by the product itself or by a customer specific working procedure is not subject of this manual.**

## 1.2. Design

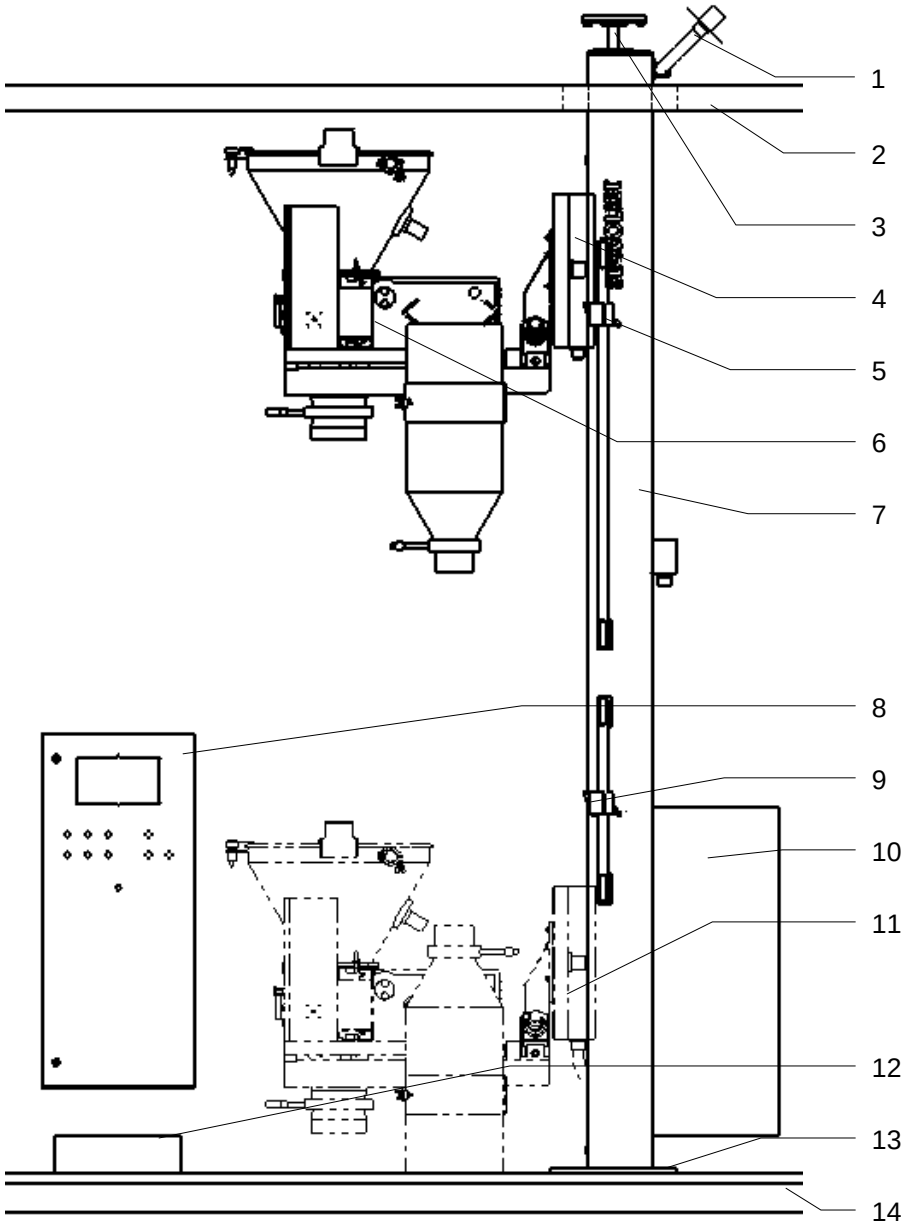


1) energy supply
2) cleanroom ceiling
3) column bracing
4) front case with supporting arm in max.-height
5) upper height stop device
6) mounted sieve machine
7) column with internal guide and lift system
8) control cabinet
9) lower height stop device
10) hydraulic cabinet
11) supporting arm in min.-height
12) platform
13) base plate
14) floor with finished surfaces

For more details and dimensions refer to general arrangement and/or layout drawing at the attachment of this manual.

- Original Instructions -

### 1.2.1. Supporting arm

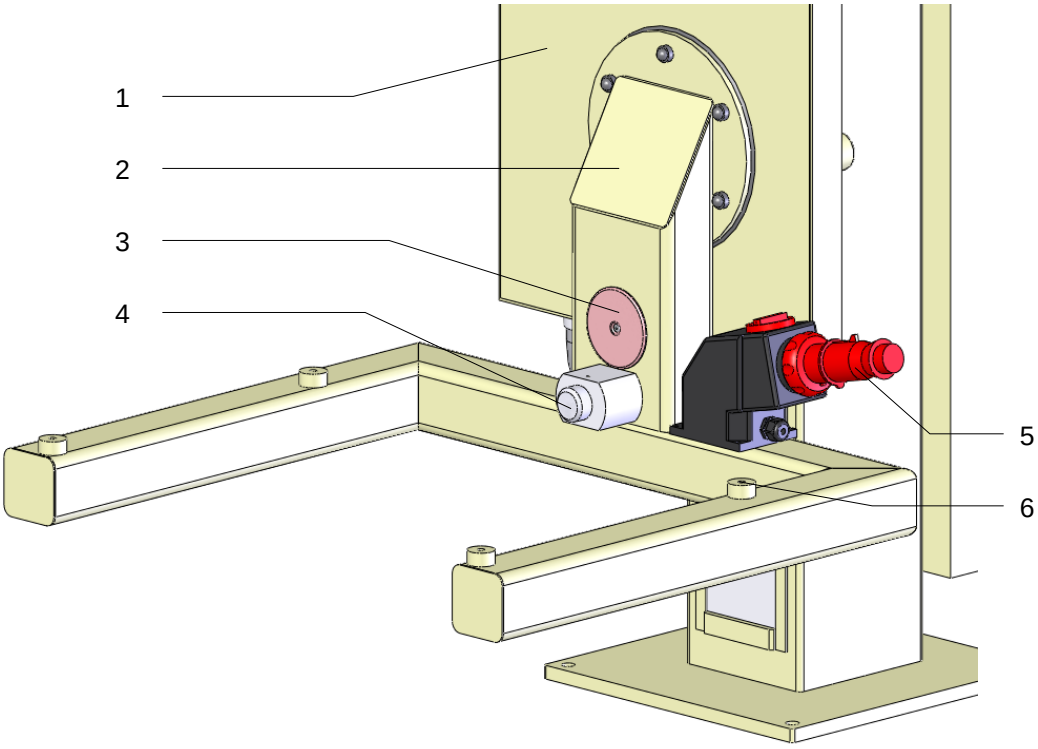


1) front case
2) supporting arm (c-shaped)
3) assembly opening
4) stop collar with integrated safety switch "machine in position"
5) plug and socket device for sieve machine
6) cradle (4 pcs.) for sieve machine

- Original Instructions -

### 1.2.2. Machine to be used

Handle exclusively following described and confirmed machine.

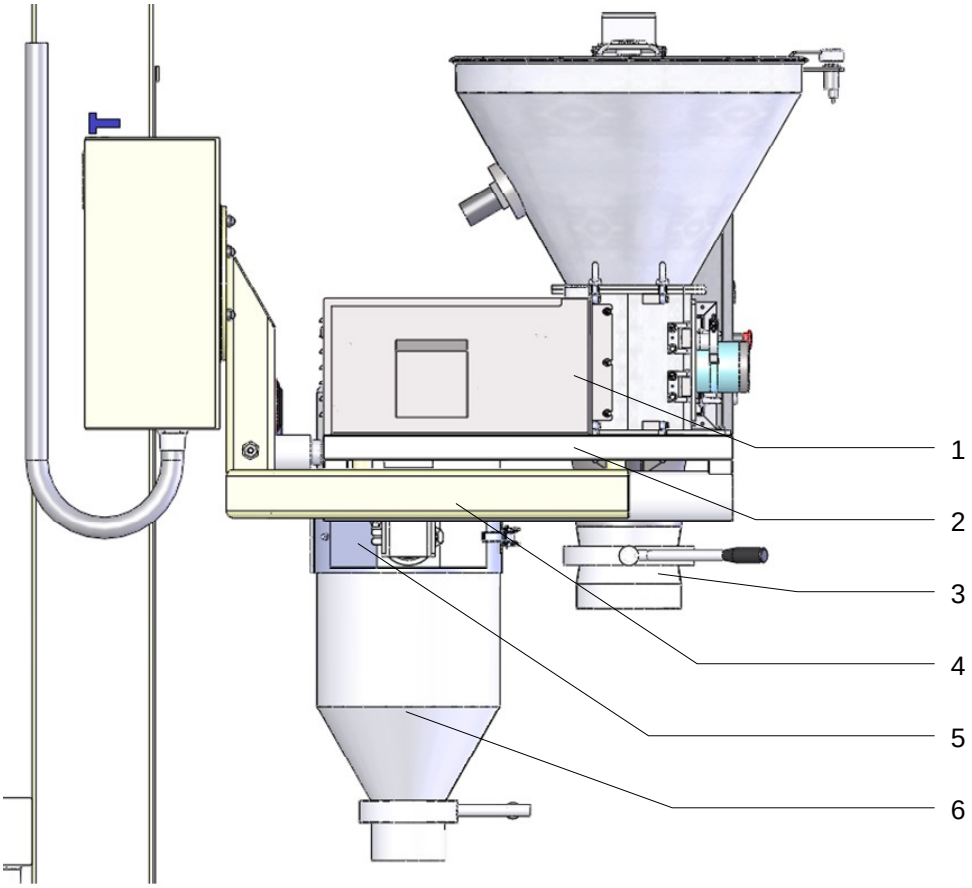


1) sieve machine with mounted funnel
2) mounting frame from sieve machine
3) discharge valve
4) supporting arm
5) drum clamp device
6) clamped and inverted drum

- Original Instructions -

### 1.3. Functional characteristic

The Machine is stationary and bolted to the floor by compound anchors. A provided counter plate is installed to site construction for top fixing.

It is driven by an electro-hydraulic power pack which is placed in the rear mounted cabinet of the column. The contactor control is installed into the built- in panel. The various functions are controlled by push button via "dead-man-control" installed into its door.

The lift motion is done by a single actuated lifting hydraulic cylinder inside the column which moves up and down a guided carriage to which the inversion gear is bolted.

In case of line rupture or loss of power the lift cylinder is locked by a direct installed, pilot operated check valve against lowering.

The inversion gear is bolted to the guided carriage and consists of a toothed cross roller bearing, driven by a hydraulic motor with brake and pinion. End positions are limited and detected.

Air supply and control cable from the panel come from the ceiling and are lined into the top of the column's internal trough a flexible duct.

Electric supply will be lined into the electric cabinet.

### 1.4. Operating elements

The operation elements will be delivered severally and must be installed into to combined control cabinet (customer's site).

Followed buttons are supplied:

- Emergency Stop
- LIFT button
- LOWER button
- LOWER SLOWLY button
- INVERT FORWARD button
- INVERT BACKWARD button
- MOTOR ON button
- RETRACT UPPER HEIGHT STOP
- RETRACT LOWER HEIGHT STOP

- Original Instructions -

## 1.5. Operation sequence

**INFORMATION**

**Operation sequences in more detail are described in chapter 6. Operation!**

1.5.1. Milling of API2 to small drum

- positions MF3 into supporting arm,
- lifts supporting arm till MF3 is fully set on arm, screws MF3 onto supporting arm, releases trolley clamp,
- lifts supporting arm approx. 100mm,
- removes trolley,
- lowers arm to minimum height,
- charging of MF3 mill with API2,
- lifts supporting arm to height suitable to place small drum,
- positions an empty drum under the MF3 outlet,
- lowers arm onto lower height stop to dock MF3 mill to small drum,
- starts MF3,
- milling in process,
- stops MF3 once charge is milled,
- lifts supporting arm to undock mill from small drum,
- remove small drum,
- lowers supporting arm to minimum height,
- position small drum into lateral installed drum bracket.

*continued to charge IBC*

*- Original Instructions -*

1.5.2. Discharge from small drum into IBC

- closes drum bracket to clamp small drum,
- lifts drum to inversion height,
- inverts the small drum manually to 180° position,
- lifts to max height,
- positions IBC onto the weighing scale
- lowers arm onto upper height stop to dock small drum to IBC
- opens the valve of drum's discharge funnel to discharge milled contents into IBC
- discharging in process
- closes valve
- Undock small drum from IBC and lifts supporting arm to max. height
- removes IBC
- lowers supporting arm with small drum to inversion height
- inverts the small drum manually to 0° position
- lowers supporting arm with small drum to min. height
- opens and removes empty drum from bracket
- next sequence

- Original Instructions -

## 1.6. Technical Data

**Load**

| | |
|---|---|
| Load | MF3 No: SG.TBP.202.M.5216 |
| handover of MF3 to supporting arm | trolley (site supply) |
| handover of drum into clamp shell | on floor |
| Load capacity | 250kg (MF3 with product) |

**Dimension and Technical Specification**

| | |
|---|---|
| Column height | 4441mm |
| Mezzanine ceiling height | 4200mm |
| Min. height (pick up height of drums) (centre of inversion) | 834mm |
| Max. height (pick up height of drums) (centre of inversion) | 3568mm |
| Inversion height (centre of inversion) | 1650 to 1950mm |
| Total width of MF3 Mill | approx. 1340mm |
| Total length (rear of column (wall) to funnel of MF3) | approx. 2104mm |
| Design | non slewable column with top fixing |
| Ingress protection | IP 54 |
| Inversion angle | 180° (while mill is out of support frame) |
| Inversion torque | 1000Nm |
| Hydraulic cabinet | W x H x D<br>500mm x 1300mm x 335mm |
| Oil Tank | Size 7L, filling volume approx. 6 L |
| Hydraulic Oil | With FDA approval |
| Hydraulic Pump | 3,2cm³/U ( 4,64 L/min.) |

- Original Instructions -

Continued – technical data

| | |
|---|---|
| Total weight | approx. 1000kg incl. load |
| Reach<br>(middle of column – middle of MF3 outlet) | 1082mm |
| Mounting | Finished floor installation by compound anchors M16:<br>- floor has to be even and horizontal.<br>- thickness of concrete has to be minimum 250 mm (300mm at site).<br>- minimum concrete quality: B25, C20/25. (Grade 35 concrete at site)<br>- Top fixing by hex cap screws M16 |
| Compressed Air Supply | 6-7 bar – (ND6)<br>supply from mezzanine ceiling<br>(Servolift delivers 5m hose, cut to adequat length on site) |
| Electric supply | 400 V, 50 Hz, 3Ph+PE, 2.5 kW<br>(The electric supply will be lined into the built-in panel) |
| Explosion protection rate | **ATEX-category II3D (zone 22):**<br>Explosive atmosphere in the form of a cloud of combustible dust in air is not likely to occur in normal operation but, if it does occur, will persist for a short period only.<br>motor protection rate II3D IP55 T125°C |
| **Stainless steel design** | |
| Exterior parts | 1.4301 (AISI 304),<br>1.4306 (AISI 304L)<br>1.4541 (AISI 321) |
| Mechanical treated parts<br>(bearing flanges, handles, distance blocks) | 1.4104 (AISI 430F)<br>1.4057 (AISI 431)<br>aluminium anodized |
| Interior parts | St37-2 (S235JR)<br>St52-3 (S355JO) |
| Product contact parts | Funnel; butterfly valve ; adapter piece<br>product contact parts 1.4404 (AISI 316 L)<br>surface<br>product contact parts Ra ≤ 0,8 µm |
| Surfaces | Pharmaceutical design:<br>- surfaces, mounting parts, mechanical stainless steel parts<br>- ground # 220, Ra ≤ 1,5 µm<br>- welding seams ground flat, other welds seams ground |
| Cover band | - polyester with urethane coating<br>- sealed edges<br>- FDA-conform |

- Original Instructions -

Continued – technical data

**Assembly Groups**

| | |
|---|---|
| Lift Unit | column with internal guide system<br>- hydraulic lift cylinder with pilot operated check valve as safety element |
| Mechanical height stop | two infinitely adjustable height stops pneumatically retractable (one height stop is used to discharge into a IBC one height stop is used to discharge into a small drum) |
| Supporting arm with inversion drive | - inversion drive bolted to guided carriage.<br>- supporting arm bolted to inversion bearing.<br>- components installed into housing .<br>- hydraulic motor completely housed.<br>- installation of MF3 by four bolts |
| Hydraulic cabinet | Stainless steel cabinet including:<br>- hydraulic power pack<br>- pneumatic and hydraulic control valves |

**Control**

| | |
|---|---|
| Control | - installed into electric cabinet<br>- contactor control<br>- main switch on electric cabinet<br>- motor control |
| Operating elements | - 1x E-STOP<br>- 1x push button LIFT<br>- 1x push button LOWER<br>- 1x push button LOWER SLOWLY<br>- 1x push button INVERT FORWARD<br>- 1x push button INVERT BACKWARD<br>- 1x push button MOTOR ON<br>- 1x push button RETRACT UPPER HEIGHT STOP<br>- 1x push button RETRACT LOWER HEIGHT STOP<br><br>Combined panel and electric cabinet to be provided by Frewitt. Operating Elements are delivered, installed on site and connected to terminals by Servolift |
| Sensors | - 1x inversion height (sensor)<br>- 1x MF3 in position (safety switch Elobau, supplied by Frewitt)<br>- 1x supporting arm inverted to 0° (sensor)<br>- 1x supporting arm inverted to 180° (sensor) |
| Interfaces | non |

- Original Instructions -

Continued – technical data

**Safety**

| | |
|---|---|
| Safety devices | - lift range limited<br>- max. lift pressure limited by system installed pressure limiting valve<br>- inversion angle limited by end stops<br>- inversion torque limited by pressure limiting valve |
| Interlocks | - inversion only possible at inversion height<br>- inversion only possible while MF3 is out of supporting frame<br>- LIFT / LOWER only possible with arm at 0° or 180° inversion position<br>- functions LIFT / LOWER, INVERT FORWARD / BACKWARD, LOWER SLOWLY only possible with activated MOTOR ON button.<br>- to LOWER SLOWLY only with pressed button MOTOR ON and LOWER SLOWLY |

- Original Instructions -

SERVOLIFT

# 2. Safety Advices

## Table of Contents


**2. Safety Advices 1**

2.1. User’s Duty of Care ... 2

2.2. Explanation of the Used Safety Signs ... 3

2.2.1. Explanation of the Used Safety Signs at the machine ... 4

2.3. Basic Safety Measures ... 5

2.4. Basic Safety Measures during Maintenance and Servicing ... 6

2.5. Demands on Operators ... 7


- Original Instruction -

## 2.1. User's Duty of Care

**INFORMATION**

**This manual does NOT refer to health hazards caused by the used product itself or by customers specific working procedure!**
**Warnings on this matter and appropriate safety precautions belongs to users undivided responsibility!**

This machine has been designed under consideration and careful selection of the harmonized standards which have to be kept, as well as further technical specifications. Therefore it agrees with the state of art and guarantees a maximum of safety.

This safety can only be achieved during normal operation, if all recommended measures are met. It belongs to the user's duty of care, to plan these steps and to control the execution.

**The user especially has to control, that**

- the machine is only employed for its intended use.
- the machine is only operated in perfect and working state and especially the safety installations are checked periodically for their functioning.
- the necessary personnel protective equipment for the operating-, maintaining-, and repair staff is at hand and used by the corresponding people.
- the owner's manual is always complete and in a readable condition and available at the machine's site.
- only sufficiently qualified and authorized personnel operate, maintain and repair the machine.
- this personnel is periodically instructed regarding all appropriate questions of operational safety and environmental protection and that they know the owner's manual and especially the included safety advice.
- all installed safety and warning labels will not be removed and are always readable.
- the machine will not operate with demounted covers.

- Original Instruction -

## 2.2. Explanation of the Used Safety Signs

Following safety signs are used in the present owner's manual. These signs should call above all the readers attention to the text opposite the safety sign.

**DANGER**

**Danger indicates a hazardous situation which, if not avoided, will result in death or serious injury.**

**WARNING**

**Warning indicates a hazardous situation which, if not avoided, could result in death or serious injury.**

**CAUTION**

**Caution, used with a safety alert symbol, indicates a hazardous situation which, if not avoided, could result in minor or moderate injury.**

**INFORMATION**

**This sign indicates information which is used for a better under-standing among other things of the machines function.**

**SEPARATE INSTRUCTION**

**This sign points to (attached or separately delivered) additional manuals or guides for operating and servicing of OEM (original equipment manufacturer) parts which have to be read and followed attentively! Safety instructions referring to this must be respected absolutely!**

- Original Instruction -

2.2.1. Explanation of the Used Safety Signs at the machine

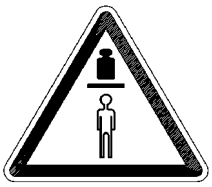

**OVERHEAD LOAD WARNING**

**Warning of raised loads.**
**Those machines are labeled, which are exclusively destined for stay under the raised load only by the operator, e.g. to open the discharge valve or to install a discharge nozzle. At this time the load must be mechanically set on the height stop.**
**The max. lift capacity is indicated below the pictogram.**

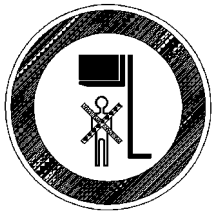

**STAY UNDER THE LOAD PROHIBITED**

**This sign strictly prohibits any stay under the raised load. Those machines are labeled which are not equipped by a height stop device and a stay under the load is not exclusively intended.**
**The max. lift capacity is indicated below the pictogram..**

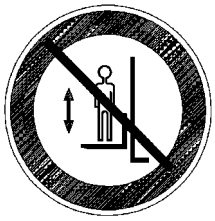

**MAN RIDING PROHIBITED**

**This sign strictly prohibits any man riding on the load suspension device.**
**Those machines are labeled which offers evidently the possibility of riding the supporting arm, e.g. platforms, forks etc..**

- Original Instruction -

## 2.3. Basic Safety Measures

- The legal rules for prevention of accidents must be followed.
- Lifting personnel and climbing up the machinery is forbidden.
- It is only allowed to handle the described loads.
- If other bins should be handled, the written approval of the manufacturer is necessary.
- Prior each start of the unit, a safe pick up of the load is to be checked.
- Do not exceed the maximum allowed working load.
- Do not stand within the working area of the machine.
- Do not do any work on the electric installation with alive electric.
- Any work on the electric installation is only allowed to licensed electricians.
- The owner's manual must be always accessible to the operating staff. One copy must be stored at the machine. (e.g. cabinet door)
- When putting machine out of service, it has to be locked against unauthorized use by the lockable main switch.
- Prior to each start of production the machine has to be checked for visible faults. Make sure, that it is only used in perfect shape. Discovered faults have to be reported to the superior.
- Prior to each start of production, material and objects which are not necessary for production have to be removed from the working area, e.g. forklift truck.

**CAUTION**

**Prevent from electrostatic self-charge, while discharging non-conducting products! (Fluids, powders, granulates) If conductivity is greater than $10^{-8}$ S/m, self- charge can be excluded.**
Electrostatic discharge.

- For an suitable deduction / grounding, wear applicable shoes and clothes

- Original Instruction -

## 2.4. Basic Safety Measures during Maintenance and Servicing

The provided inspection and maintenance interval must be kept!

Respect maintenance and repair manuals of individual components attached to this manual

- Prior to the execution of maintenance and servicing, the access to the working area of the machinery has to be closed against non-authorized staff. Attach or install information signs, which indicates the maintenance or repair work!
- Prior to the execution of maintenance and servicing the electric main switch has to be locked by a padlock. The control has to be switched off by the key. Both keys must be in hands of the person, who carries out the maintenance and servicing.
- For the exchange of heavy machine parts, only suitable and perfect load suspension devices and sling units must be used!
- Lubricants, cooling and cleaning agents, dangerous to environment, have to be disposed according to legal regulations.
- Hydraulic and pneumatic system must be depressurized for maintenance.
- Works on the electric and electronic components as well as the hydraulic installation are only allowed to licensed expert persons.

- Original Instruction -

**DANGER**

**Supply lines under voltage despite switched of main switch.**
Vital wounds, death by electric shock.
- By installation of supply lines, disconnect electrical connections on side.

**WARNING**

**Release pressurized hydraulic and pneumatic lines.**
Vital wounds, death by pressure plunge.
- Switch off supply of energy and check pressure at the corresponding manometer

**CAUTION**

**Oil and grease handling.**
Skin irritation, sickness / vomit if swallowed.
- Wear suitable protective clothing
- Wear safety goggles
- Observe the safety instructions of manufacturer
- Avoid skin contact – by skin contact, deep clean
- By eye contact, eye rinsing

## 2.5. Demands on Operators

**DANGER**

**By operating errors.**
Vital wounds, death and or damage to machinery.

- Following regulations must be kept

- Operation of the unit is only allowed to trained persons above an age of 18 years. The operator must be "expressly" instructed by the user.
- Only authorized personnel are allowed to be present at the working area of the machine.
- The operator must have read and understood the manual and knows the shown safety information.
- Works on the electric and electronic components are only allowed to licensed expert persons. Maintenance and repair work on hydraulic and pneumatic components must only be done by special trained persons.

- Original Instruction -

SERVOLIFT

# 3. Transport

## Table of Contents


**3. Transport 1**

3.1. General ..... 2

3.2. Transport to installation site ..... 3

3.3. Admissible Devices for Transport ..... 4

3.4. Suspension of the machine ..... 5

3.5. Remove the eye bolt screws ..... 6


*- Original Instructions -*

## 3.1. General

**DANGER**

**Transport.**
Vital wounds, death and or damage to machinery.
- Following regulations must be kept

- Transport work is only allowed to qualified personnel, taking the safety regulations into account.
- It is only allowed to lift up the machine at the designed supporting spots or possibilities respectively.
- To transport the machine, use only appropriate load suspension devices and hanging equipment. At selection, consider the crate or packing list indicated load.
- Read also chapter "Safety Advice"!.
- Loose or bulky parts have to be removed before transport or must be fastened against independent movement.
- Loose hangings out cable and hoses have to be tied up safe. On this occasion pay attention that these are not bent.
- The hydraulic power pack (tank) must be emptied and the electric motor must be supported within the cabinet if the machine is NOT transported vertically! (Note: In case of an installed, so called “mini- power- pack”-(black colored oil tank!)- replace of tank vent screw by a (closed) screw plug will be sufficiently)
- Leave machine parts as long as possible on transport pallets.

- Original Instructions -

### 3.2. Transport to installation site

The machine / machine parts are delivered on pallets or crates. Let the machine if possible on the way to the the assembly location as long as possible on the range or in the crate and carry the load with a forklift or pallet truck.

**DANGER**

**Suspended machine can swing.**
Vital wounds, death and or damage to machinery.

- Hang up the machine as shown with appropriate load suspension device
- Manoeuvre slowly and gently
- The location of the central suspension point must be coincide with the centre of gravity and must not be moved

**INFORMATION**

**If no suitable holes or attachment points for slings are available, the machine parts are hung with suitable cable loops. Make sure that no parts are crushed or torn.**

- Original Instructions -

### 3.3. Admissible Devices for Transport

**Max. allowed load at 45° pulling direction:**
**M16 = 500 kg**
**M20 = 830 kg**

**INFORMATION**

- eye bolt at right or left side face of column

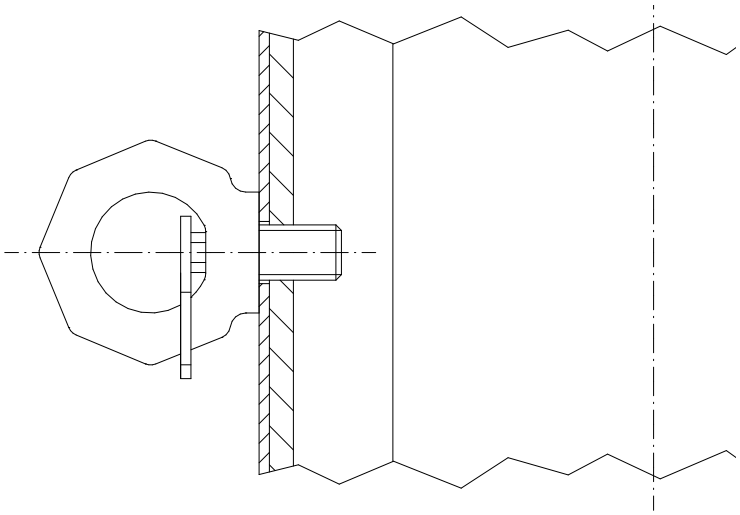

- shackle at floor plate (in the mounting holes)

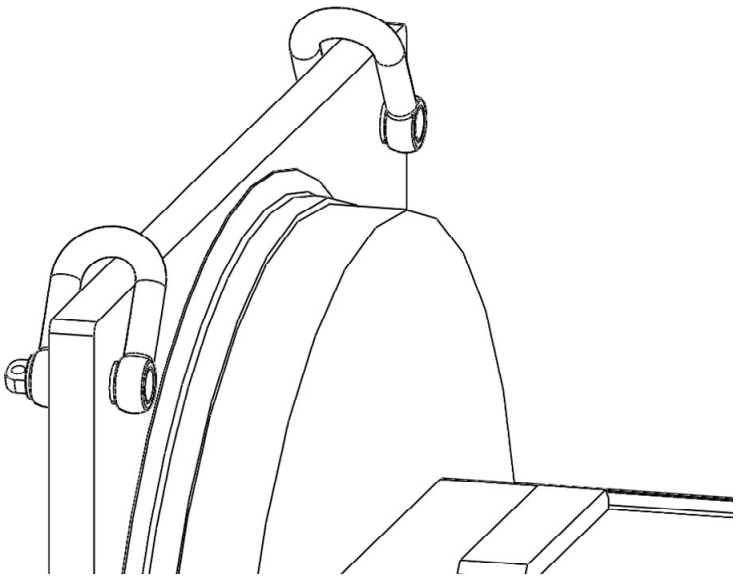

**Orientate eyebolts into pulling direction.**
**Max. allowed load at 90° pulling direction:**
**M16 = 500 kg**
**Do not hook up the unit at any part of the supporting arm system!**
**Orientate eyebolts into pulling direction.**

**INFORMATION**

- Original Instructions -

### 3.4. Suspension of the machine

To hang up the machine, mount the lifting devices as shown in the picture below.

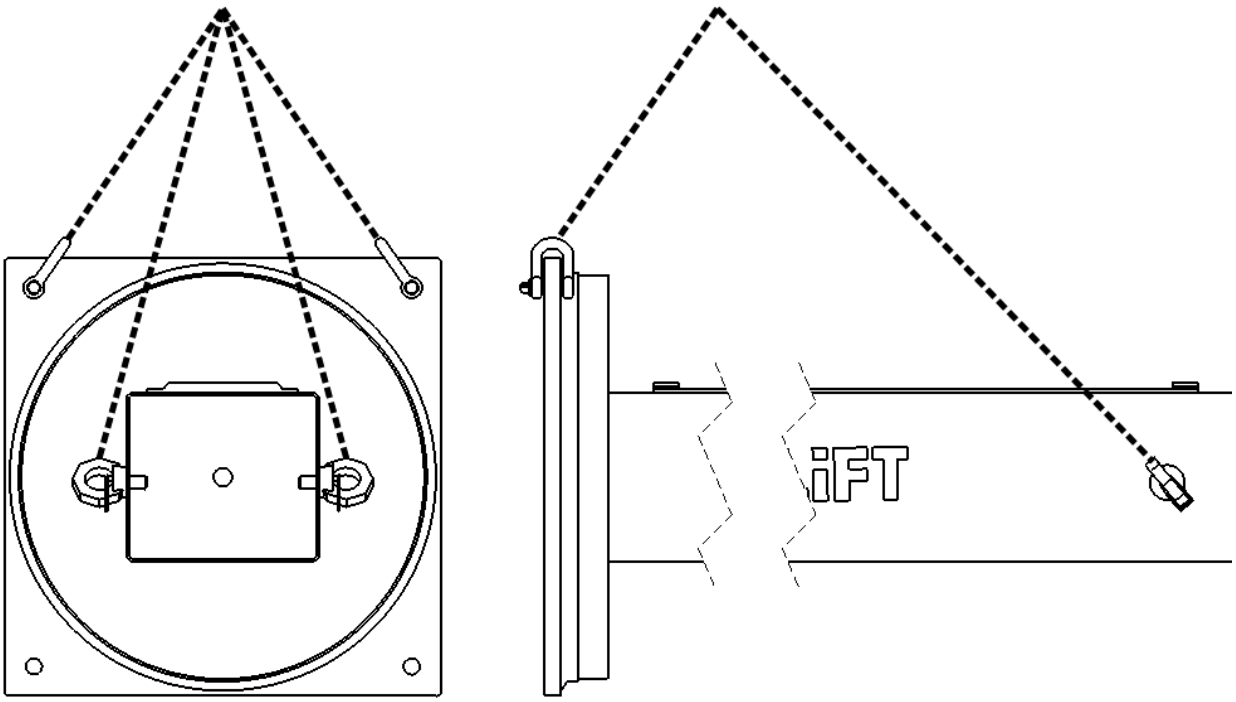


**INFORMATION**

**Do not hook up the unit at any part of the supporting arm system!**

- Original Instructions -

### 3.5. Remove the eye bolt screws

**INFORMATION**

**Eye bolts at the right and left side of the unit must be removed before operation of the unit! Close threaded holes as shown below.**

1 Hex socket set screw, flat with outer surface
2 Plastic cap pressed into socket set screw
3 Outer surface of column

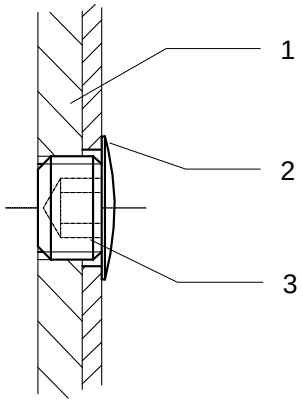


- Original Instructions -

# 4. Installation

## Table of Contents

**4. Installation 1**
4.1. General ..... 2
4.2. Conditions of Surroundings for Installation ..... 3
4.3. Assembly and Erection ..... 4

- Original Instructions -

## 4.1. General

**DANGER**

**Installation of the machine.**
Vital wounds, death and or damage to machinery.
- Following regulations must be kept

- Installation work- assembly and connection of the machine is only allowed to qualified staff by keeping the safety advice.
- Prior to installation, the device has to be checked for transport damage. The manufacturer has to be informed immediately about possible damages.
- Use only the delivered fixing material as dowels and bolts.
- Pay attention especially to the tightening torque of the fixing screws of the supporting arm.

- Original Instructions -

**INFORMATION**

**Attention: The chemical anchors are subject of approval certificates by building authorities, that means that during installation of the anchors records are to be kept , confirming the actual concrete strength and the installation in accordance with regulations by the construction supervisor or one of his representatives. The corresponding records have to be kept available 5 years at minimum by the contractor.**

**DANGER**

**Respect exactly curing time of chemical anchors.**
Vital wounds, death and or damage to machinery.
- Avoid any stress or displacement during curing time
- Remove the load suspension device after curing time

- Let the hook up and the bracing at the machine as long at the machine till it is perfectly anchored.
- Do not stress the machine, before the anchors have reached their full load carrying ability.
- Refer also to chapter "Safety advice"

## 4.2. Conditions of Surroundings for Installation

- For installation within an explosion proof area the user has to be informed in time, to arrange any necessary steps. (e.g. interruption of production, to confer a welding permit, as well as the allowance to run non x-p rated machines and tools).

  This is valid analogous for the installation of machines within clean rooms used in the pharmaceutical industry.

- The load carrying ability the quality of the floor must be guaranteed (even, resistant concrete floor with minimum thickness of 250mm to allow an anchoring depth of 140mm.
- The area shown at the top view must be free of obstacles.
- The place for installation is prepared in that way, that the machine can be installed on smooth ground (possible pitch) and erected exactly vertical.
- Electricity is available near the machine's supply (backside of the column).
- Cranes or lifting equipment (e.g. fork lift truck) or fixing spots above the area of the installation of the unit for a pulley block.
- The unit is intended to be installed in a room. It is not suited for being operated under open air.

- Original Instructions -

### 4.3. Assembly and Erection

If the machine is delivered on a pallet or in a crate, the single parts and accessories have to be removed to have free access to the column.

The column has to be hooked up at the above described point(s) (refer also to chapter "transport" item 2) and erected at the intended place.

- Mark emplacement of the machine onto the floor, depending on ambient equipment. (see attached general arrangement drawing)
- Erect the column exactly vertical at the place of installation (e.g. by help of sheet metal stripes under the floor plate). Take care, that it is not hollow between the base plate and the floor.
- Check vertical position of column.
- Drill and install the floor anchors (chemical anchors 4 pcs. UPAT Multicone dynamic UMV 125 M16 P, see information in the separate instruction) directly through the holes of the floor plate.
- Drill and install the top fixing device at the concrete ceiling and fasten the fixing pin and ceiling cover plate.
- Now lift the supporting arm horizontal in front to the front case. (a forklift truck with pallet has proved to be a good remedy to lift and position the load suspension device for installation).
- Connect the electric and pneumatic control lines from supporting arm to guide system according to attached schemes.
- Join the supporting arm to the tilt bearing and installed the fixing screws according to assembly drawing with the needed torque.
- Embarrassed the pneumatic supply lines to the connection point.
- Install the cover band.
- Close all covers
- Seal the rim of the plate to the floor with silicone rubber.
- Installed the delivered switch pay into the customers control cabinet beside the machine. Also install the push buttons at the front of the control cabinet.
- Wired the supply and control lines to the corresponding connection points.

- Original Instructions -

SERVOLIFT

# 5. Commissioning

## Table of Contents


**5. Commissioning 1**

5.1. General ..... 2

5.2. Installation of supply lines ..... 2

5.3. Basic Adjustments ..... 3

5.3.1. Activated the automatic lubricator ..... 4

5.4. First function run ..... 4


- Original Instructions -

## 5.1. General

**DANGER**

**It's only allowed to instructed and authorized expert to hook up of the supply lines.**
Vital wounds and or death by electrocution.

- By installation of supply lines, disconnect electrical connections on side.

## 5.2. Installation of supply lines

- Connect the control lines from the hydraulic cabinet at the corresponding terminal in the control cabinet according to the attached electric scheme.
- Install main supply cable to the site mains corresponding to electric scheme. Use the strain relief.
- Install the lines between push buttons and switch bay.
- Connect pneumatic maintenance unit to compressed air supply.
- Connect machine to buildings equipotential bonding conductor!

**INFORMATION**

**Refer to enclosed schemes.**

- Original Instructions -

## 5.3. Basic Adjustments

- Remove all crating material and transport fasteners from unit, especially the supporting piece from the electric motor of the power pack.
- Check whether the electric- and control cables have been connected and safe installed.
- Open the door of the rear cabinet behind the column.
- Check the manometer of the pneumatic maintenance unit, whether pressure is adjusted to 6 bars, but not higher than 8 bar.
- Open the filling cap of the hydraulic oil tank and fill in the provided oil (approx. 6 lt.) e.g. by help of a funnel. (See chapter “Change of oil”)
- If the tank has been filled up by the manufacturer, the blanking plug is to be replaced with the delivered ventilated tank filler cap!

  The oil level has to be checked with load suspension device at minimum level. It has to be at upper mark of oil level gauge.
- Turn main switch ON and start motor (MOTOR ON) of hydraulic pump short- lived to verify its sense of rotation.

**INFORMATION**

**If the tank is already filled and provided with a screw, it must be replaced by closure with vent.**

**INFORMATION**

**The motor and thus the pump must not be run without oil.**
**A so called "dry run" destroys the pump.**
**Prior the first operation of the machine, the sense of rotation of the pump motor has to be checked (refer to red arrow).**

- Original Instructions -

5.3.1. Activated the automatic lubricator

Activation by turning the screw in, till eye is broken off.

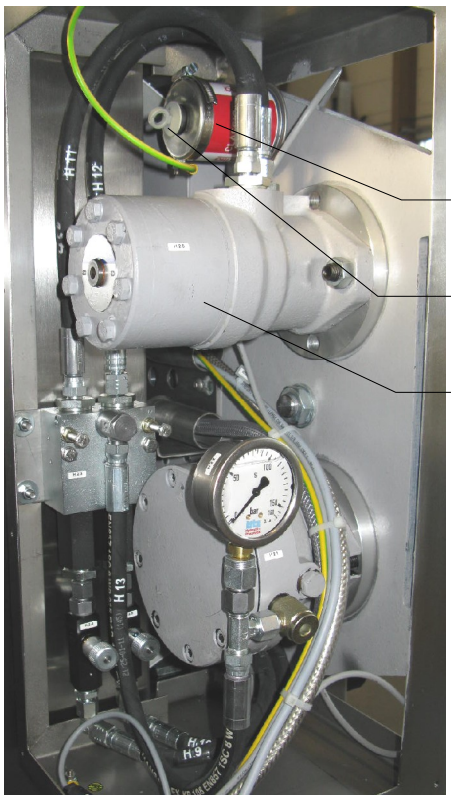


1 automatic grease canister
2 activating screw
3 hydraulic motor

**SEPARATE INSTRUCTION**

**Before activation of the automatic greasers refer to enclosed instructions PERMA.**

## 5.4. First function run

During test run, height positions may be adjusted if necessary see chapter “Adjustment”.

Follow step by step the sequence of operation described in chapter “Operation”. Pay attention to speeds, pressures and eventual collisions. Adjustments on hydraulic system must be done carefully and very slightly.

- Original Instructions -

# 6. Operation

## Table of Contents


| | | |
|---|---|---|
| **6.** | **Operation** | **1** |
| 6.1. | Generals | 2 |
| 6.2. | Working place of operator | 2 |
| 6.3. | Start position | 3 |
| 6.4. | Sequence of operation | 4 |
| 6.4.1. | Milling of API2 to small drum | 4 |
| 6.4.2. | Discharged from drum into IBC Container | 5 |


- Original Instructions -

## 6.1. Generals

**DANGER**

**Operating of the machine.**
Vital wounds and or death to by power-driven movement.

- Don’t stay at reach of efficacy
- To watch out the load and movement of the machine
- By faults / troubles switch the machine off and locked against not allowed use until the defect has been rectified

## 6.2. Working place of operator

During working with the machine, only the operator himself is allowed to be present within the active range of the machine.

The usual working place of the operator to install the machine / drum onto the supporting arm is in front of them.

Do not stay within the working area while machine is running.

Only for handle the manually discharge valve / drum tilt device, the operator is allowed to be present within the working area of the machine. It is not foreseen, that personnel is present within the area with any machine movement.

The usual position to activated the function of the machine, the operator stand on the platform and can operate all functions of the machine.

**WARNING**

**Inappropriate installation of the load.**
Vital wounds, death and or damage to machinery by slipping off / drop down of the load.

- Max. load don’t exceed
- Pick up the load with the provided load suspension device
- Don’t stay under the load

- Original Instructions -

## 6.3. Start position

**INFORMATION**

**Make sure that no persons or obstacles stay within range of the machine.**

- machine set up and connected,
- main switch turned on,
- compressed air available,
- machine in basic position:
  - supporting arm in min.-height
  - supporting arm in 0° tilt position
- No machine installed to supporting arm,
- Sieve machine presented on trolley.

**INFORMATION**

**All functions are available in a so called dead man´s control. The function stops immediately after the release of button.**

- Original Instructions -

## 6.4. Sequence of operation

**INFORMATION**

**The followed refers to the functions of the SERVOLIFT machine.**

### 6.4.1. Milling of API2 to small drum

| # | action | reaktion |
|---|---|---|
| • | Manoeuvre the trolley with sieve machine into the supporting arm. | Sieve machine in position. |
| • | Push and hold the MOTOR ON and additionally the LIFT button until the sieve machine is fully set on the supporting arm. Note: check meanwhile the correct position, if necessary reposition the trolley. | The supporting arm lifts up and set up the sieve machine. |
| • | Install the fixing screws and release the trolley clamp. | Machine complete set up. |
| • | Push and hold the MOTOR ON and additionally the LIFT button to approx. 100mm and removes the trolley out of the working ranch. | Trolley removed, machine ready for operation. |
| • | Push and hold MOTOR ON and additionally the LOWER SLOWLY button until the movement stops. | The supporting arm lower down to min.-height and stops at the end stops. |
| • | Charging of the sieve machine with product (API2). | Sieve machine filled with product. |
| • | Push and hold MOTOR ON and additionally the LIFT button until the suitable height to place a small drum under the sieve machine outlet. | The supporting arm lifts up to the needed position to bring in a empty drum. |
| • | Positions an drum under the sieve machine outlet. | Drum in position. |
| • | Push and hold the MOTOR ON and additionally the LOWER button until the movement stops. | The supporting arm lower down onto the height stop device and stops. |
| • | Starts the sieve machine. | Sieve machine is running and sieves the product into the drum. |

- Original Instructions -

Continued – Milling of API2 to small drum

| # | action | reaktion |
|---|---|---|
| • | After sieving stops the sieve machine and push and hold the MOTOR ON and additionally the LIFT button until the drum can be removed from filling position. | Supporting arm lifts up to needed position and stops after release the button. |
| • | Remove the charged drum. | |
| • | Push and hold the MOTOR ON and additionally the LOWER button until the movement stops. | The supporting arm lifting down to min.-height and stops at the end stops. |
| • | Position the charged drum into lateral installed drum bracket. | Drum positioned into the drum bracket. |

Continued – to charge IBC Container

6.4.2. Discharged from drum into IBC Container

| # | action | reaktion |
|---|---|---|
| • | Installed the funnel with discharge valve at the drum. | Funnel installed. |
| • | Closed drum bracket to clamp the drum. | Drum clamped. |
| • | Push and hold the MOTOR ON and additionally the LIFT button until the movement stops. | The supporting arm lifts up to inversion height and stops. |
| • | Pull the interlocking of invert device and tilt the drum manually about 180°. | Drum in discharge position. |
| • | Push and hold the MOTOR ON and additionally the LIFT button until the movement stops. | The supporting arm lifts up to max.-height and stops at the end stops. |
| • | Manoeuvre the IBC container onto the weighting scale. | Container in position. |
| • | Push and hold the MOTOR ON and additionally the LOWER SLOWLY button until the movement stops. | The supporting arm lower down to discharge height and stops at the end stops. |
| • | Opens the valve of drum's discharge funnel to discharge the sieved contents into the IBC container. | Drum will be discharged into the IBC container. |
| • | After discharge, closed the valve. | |

- Original Instructions -

Continued – Discharged from drum into IBC Container

| # | action | reaktion |
|---|---|---|
| • | Push and hold the MOTOR ON and additionally the LIFT button until the movement stops. | The supporting lifts up to max.-height and stops at the end stops. |
| • | Removes the IBC container from the weighting scale. | Scale "free". |
| • | Push and hold the MOTOR ON button and additionally the LOWER button until the movement stops. | The supporting arm lower down to inversion height and stops. |
| • | Pull the interlocking and invert the drum back into 0° Position. | Drum in load / reload position. |
| • | Push and hold the MOTOR ON and additionally the LOWER button until the movement stops. | The supporting arm lower down to min.-height and stops at the end stops. |
| • | Opens and remove the empty drum from the drum bracket. | |
| • | Close the drum bracket without a drum. | |
| • | Starts the next sequence or end of sequence. | |

- Original Instructions -

**DANGER**

**Prevention from not allowed use.**
Vital wounds and or death by electrocution.
- Main switch deactivation and locked by an padlock.

SERVOLIFT

# 7. Troubleshooting

## Table of Contents


**7. Troubleshooting 1**

7.1. General ..... 2

7.2. List of faults ..... 2


- Original Instructions -

## 7.1. General

**INFORMATION**

**If any defect or malfunction is noted before, during or after the operation of the machine, usually experts have to be consulted.**
**The operator has to inform his supervisor. He is not allowed to remedy the fault, e.g. defects at the electric installation, on his own.**

**In case of faults, the machine has to be switched off and locked against further use, till the defect has been repaired by the competent expert.**

## 7.2. List of faults

| Kind of fault | Reason | Steps to repair |
|---|---|---|
| no operation possible | • main switch OFF or main power failure<br>• emergence stop activated<br>• not enough or no compressed air | • check main switch position resp. mains supply<br>• relock emergence stop<br>• check or adjust compressed air unit |
| electric motor of power pack is not running | • motor protection relay is active<br>• oil temperature > 70°C | • in case of motor protection switch release, experts have to be consulted<br>• switch main switch of for 2min, after repeated fault – consult an expert |
| supporting arm is not lifted up | • max. load is exceeded<br>• pressure limiting valve is adjusted too low | • check weight<br>• adjust pressure limiting valve to necessary value |
| supporting arm is not lifted up to max. height | not enough oil in oil tank | fill in oil with supporting arm at lowest position and evacuate cylinder according to instructions |
| supporting arm is lifted elastically | cylinder contains air | evacuate cylinder and find out, why air had been come into cylinder |

- Original Instructions -

Continued – list of faults

| | | |
|---|---|---|
| height stop device without function | • compressed air unit adjust to low or have a leak | • adjust pressure or check system of leakage |
| height positioning not correct | • height stop position not correct | • loosen height stop latch and clamp to required height. |

**INFORMATION**

**Further errors can be caused by the built-in interlocks. Press each selected function until the movement automatically stops.**

- Original Instructions -

SERVOLIFT

# 8. Maintenance and Adjustment

## Table of Contents


**8. Maintenance and Adjustment 1**

8.1. Generals ... 2
8.2. Maintenance and care ... 3
8.3. Hydraulic oil and lubricants ... 4
8.4. Hydraulic ... 5
8.4.1. Hydraulic power pack ... 5
8.4.2. Change of oil ... 6
8.5. Adjustments ... 7
8.5.1. Adjustment of hydraulic main pressure ... 7
8.5.2. Pneumatic maintenance unit ... 8
8.5.3. Adjustment of height stop device ... 9
8.5.4. Adjustment of lowering speed ... 10
8.5.5. Adjustment of invert speed ... 11
8.6. Air- bleed of hydraulic cylinder ... 12


- Original Instructions -

## 8.1. Generals

INFORMATION

**The information regarding an annual service by a competent expert person is given.**

DANGER

**Maintenance work.**
Vital wounds, death and or damage to machinery.

- Following regulations must be kept
- All working steps must be executed in rotation

- The area for maintenance has to be protected spaciously.
- Mark the machine by a sign that it is out of operation for maintenance.
- Switch off all terminals and lock them against non intended switch on (by a padlock).
- Switch the control off at the key switch. Hand both keys (padlock and key of key switch) to the person in charge with the maintenance work.
- Release the pneumatic maintenance unit from pressure.
- Use exclusively the spare parts listed at our lists, or parts which are confirmed by us in writing.
- Refer also to the chapter "General safety advises"

INFORMATION

**Never open electric components with alive electric within explosive atmosphere.**
**Completion of repairs on Pressure-proof encapsulated components are strictly forbidden! Defective parts or components must be changed completely!**
**Be aware that electrical power supply lines running to the electric cabinet are still alive after having switched off the main switch at the machine**

INFORMATION

**We recommend abrasive and solvent free cleaning agents, which correspond to the company's internal validation regulations.**

- Original Instructions -

## 8.2. Maintenance and care

**On request:**

- purge water from pneumatic maintenance unit

**Monthly:**

- check oil level and tightness of hydraulic components (put the supporting arm in min.-height),
- visual control of frontcase with load suspension device for cracks or deformation,
- check state and readability of the operating elements, clean if necessary,
- clean the machine,
- check coverband for bends and wave lines.

**Every ½ year:**

- check the fixing of the load suspension device,
- visual check of the floor- and ceiling fixing,
- check complete unit for visual damage as deformation and cracks,
- grease U-tracks inside column with common machine grease. On this occasion check tightness of lift cylinder. Bear in mind that all cylinder rods are coated with a thin film of oil which might summarize during the course of time,
- oil lift chains. (Delivered hydraulic oil may be used!),
- check oil level at hydraulic power pack. If oil level needs to be to be filled up, check the device and its supply pipes and hoses for any leaks.

**every year:** (check by a competent person)

- remove all covers,
- all carrying parts have to be checked visually for corrosion, cracks and loose fixings,
- visual check of frontcase fixing (remove round lids)
- remove and exchange automatic lubricator at the tilt drive according to the enclosed specification,
- remove front cover sheets from tilt drive housing and remove used grease; clean proximity switches,
- remove cover around columns base plate, clean and grease external toothing of slew bearing,
- check hydraulic oil and change if necessary. Even if the unit is used rarely, the oil must be changed every two years at the latest,

- Original Instructions -

continued – maintenance and care (every year)

- tighten the floor and ceiling anchors with recommended torque by torque wrench,
- check fixing screws of supporting arm by a torque wrench,
- check function of the height Stop device and the adjust height position,
- Check the length of suspension and safety chain. The elongation is maximum allowed. 3%.
- testing according to DIN EN 60204: (protective) ground wired resistance, insulation resistance, residual voltage and also a function check.

**Every two years:**

- change the hydraulic oil (put the supporting arm in min.-height).

**Every six years:**

- The hydraulic hoses have to be exchanged every six years. On this occasion open oil tank and remove dirt out from tank.
- Replace suction filter



### 8.3. Hydraulic oil and lubricants

| Application site: | Type: | Applied product: | Quantity: |
|---|---|---|---|
| hydraulic system | CLPHC 46, ISO-VG 46 | BIOLUBE 46 | approx. 6 Liter |
| guidances, joints and tooth systems | universal grease, acid free, not resinifying food safe – if necessary | SORAJA FM 372 | to be applied thinly and evenly |

**INFORMATION**

**The factory provided oil is MOLYDUVAL Biolube 46 with viscosity class 46 acc. DIN 51519. This oil is conforming DAB and USDA H1 and is suitable for use in food industries with incidental food contact. All ingredients correspond to UDSA respectively to FDA-direction. It can be ordered from SERVOLIFT under Art.No. 126424**

## 8.4. Hydraulic

### 8.4.1. Hydraulic power pack

- Original Instructions -

8.4.2. Change of oil

**ATTENTION**

**Leaking / spill oil.**
Environment polluting.

- At first cover the working area with appropriate measures
- Immediately remove of leaking oil
- Disposed waste oil according to the valid regulations

The change of oil has to be carried out as follows:

- Lower load suspension device down to minimum height.
- Switch the machine off at the electric main switch.
- Open the access of the hydraulic cabinet.
- Place a recipient (approx. 8 lt.) in front of the oil tank.
- Open tank filler cap.
- Place drain hose into recipient and open drain cock or use a suction pump for pumping off the content of hydraulic tank.
- After oil has completely run off from tank and drain hose, close drain cock and clean drain hose. Restore drain hose as shown above.
- Pour in new oil (approx. 6 lt., type as above) until oil level is appr. 20 mm below upper rim of filling nozzle.
- Close filling nozzle.
- Switch machine ON, lift supporting arm to max. height position and lower back to minimum height and check oil level again.
- Correct oil level if necessary.
- Remove spilled or wasted oil.
- Close access of cabinet.

- Original Instructions -

## 8.5. Adjustments

**INFORMATION**

**Pressures and speeds have been adjusted by the manufacturer corresponding to customers operating conditions as far as known during manufacturing. Any changes of necessary adjustments have to be done carefully and step by step, respecting max. pressure and speeds.**

**SEPERATE INSTRUCTION**

**The manufacturer-set pressures and speeds are listed in the MACHINE BOOK related to the engine.**

### 8.5.1. Adjustment of hydraulic main pressure

1. Lift supporting arm to maximum height till it stops by itself. Check pressure at manometer (H 0.1) with activated solenoid valve (H 1.10).
2. Release lock nut at pressure limiting valve (no. 3) by a wrench.
3. Adjust new rate with allen key (using allen key 3mm) with running motor and actuated valve (clockwise "+", counter clockwise "-")
4. Tighten counter nut by holding the screw.

Schematic representation of hydraulic control valve with three functions

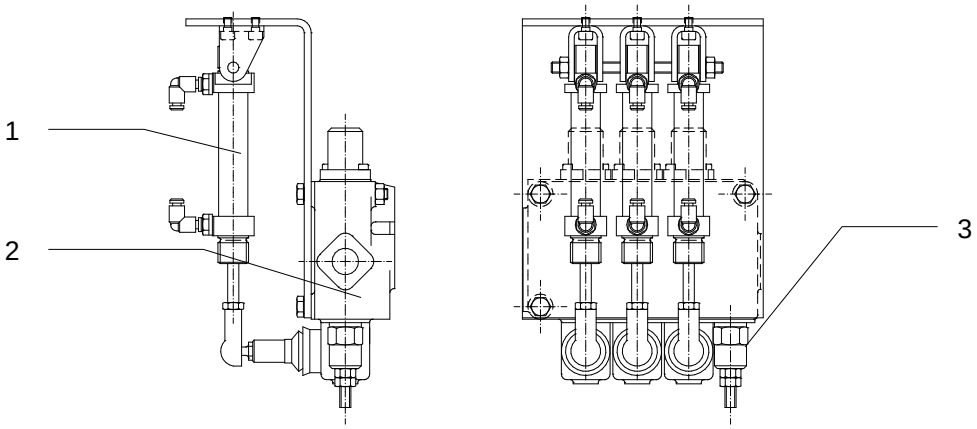


1) pneumatic cylinder
2) hydraulic control valve (H 6.0)
3) pressure limiting valve (H 6.1)

**CAUTION**

**Modification of hydraulic pressure to increase load capacity.**
Vital wounds, death and or damage to machinery.

- Is strictly forbidden to raise hydraulic pressure for increase load capacity. The machine / machine parts are dimensioned for the max. load capacity

- Original Instructions -

### 8.5.2. Pneumatic maintenance unit

Necessary pressure for the machine is to be adjusted at the maintenance unit as follows:

- lift up the upper blue cap till it is released noticeably
- now the pressure can be adjusted to the requested value by turning the cap (clockwise "+" or counter clockwise "-")
- lock the adjustment by pressing down the cap till it is caught

To release the water from the sight glass, the nozzle at the bottom has to be turned counter- clockwise (seen from below) with pressurized unit.

Replace the filter element as follows:

Close shut- off valve: system will be depressurized.

Turn filter bowl counter- clockwise, take out used filter element and put in the new one.

Remount filter bowl.

Readjust pressure if necessary.

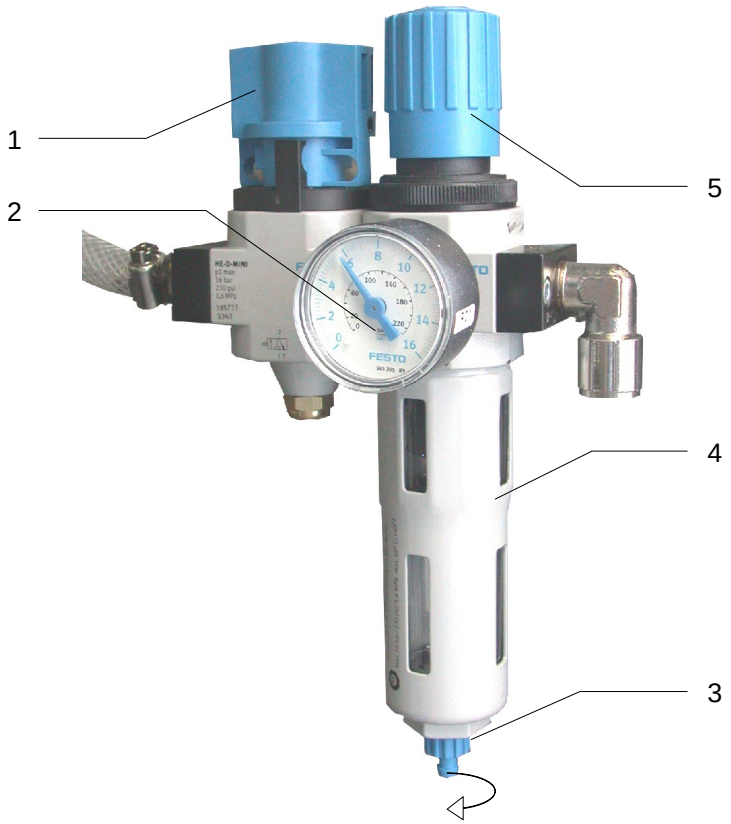


1) shut off valve („open-position“)
2) manometer
3) water release
4) filter bowl (filter and water separator inside)
5) pressure adjustment by pulling up an turning the cap (right “+”, left”-“)

- Original Instructions -

8.5.3. Adjustment of height stop device

Invert / discharge height can be adjusted by displacement of the height stop device on its rod, mounted on the lateral column side.

Schematic representation of height stop device, instructions for both devices.

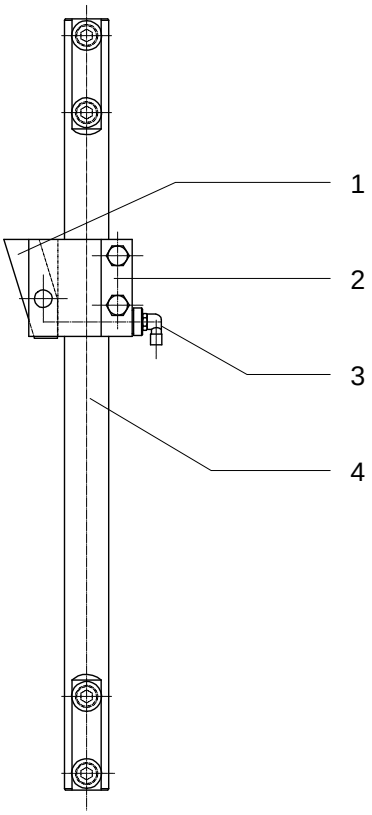


1) height stop rod
2) electric activation of height stop device
3) height stop block
4) fixing screws

Loosen both lateral hex cap screws aside the block by a wrench size 17mm. After the adjustment, orientate the device parallel to the column and tighten the screws again (tightening torque 42 Nm).

**CAUTION**

**Machine parts under tension!**
Crushing hazard, vital wounds.

- Don’t loosening height stop block with docked on supporting arm, lift it up and repositioned the block

- Original Instructions -

8.5.4. Adjustment of lowering speed

**INFORMATION**

**All "speed" settings must be adjusted with the maximal load!**

The lowering speed can be adjusted at flow control valve (H 1.3) by turning the outer, silver colored cylindrical bushing of the valve (see hydraulic scheme or followed picture). The adjustment has to be done with maximum load. Prior to adjustment the little set screw at the side of the bushing has to be loosened. (by allen key size 2,5mm). After adjustment fix the screw.

The function lowering slowly will be adjust similarly at flow control valve (H 1.5)

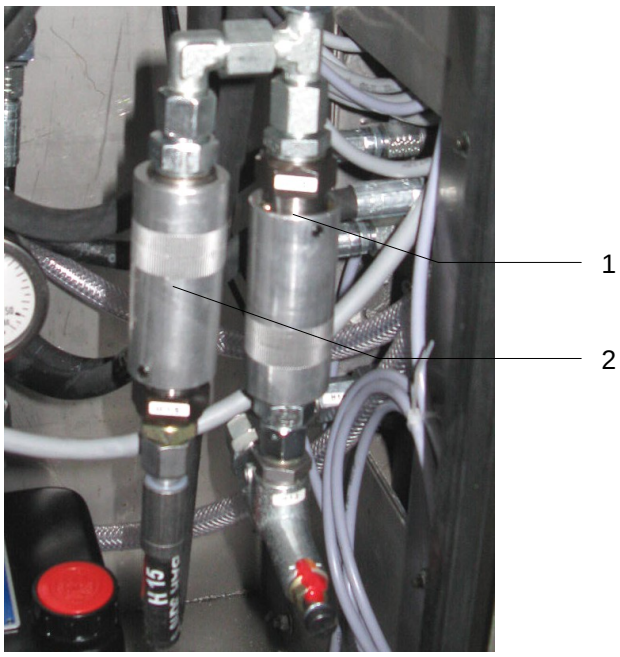


1) Flow control valve (H 1.3)
2) Flow control valve (H 1.5)

- Original Instructions -

### 8.5.5. Adjustment of invert speed

The invert speed can be adjust at the two throttle check valve (H 2.4 & H 2.5) near the invert drive motor (see hydraulic scheme or followed picture). Prior to adjustment the little screw at the side of the bushing has to be loosened (by allen key size 2,5mm). After adjustment fix the little screw.

The pressure limiting valve for inversion function

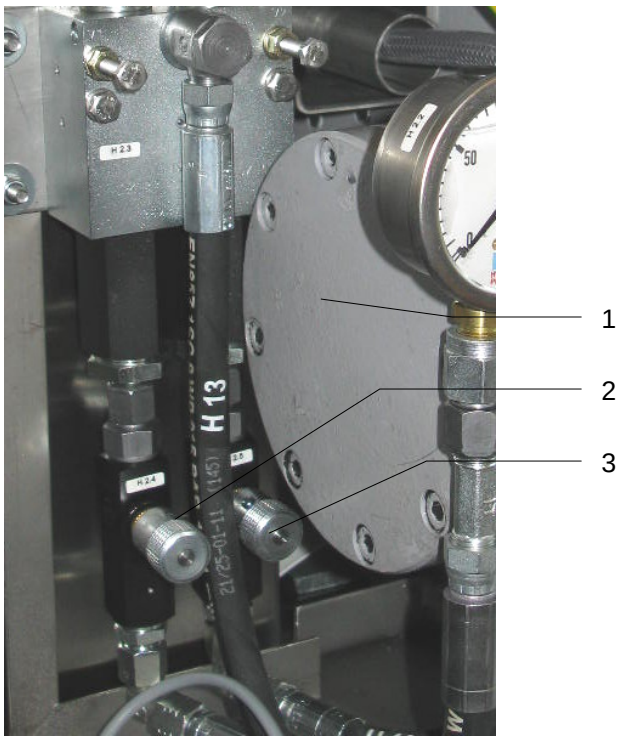


1) Hydraulic brake
2) Throttle check valve (H 2.4), invert backward
3) Throttle check valve (H 2.5), invert forward

- Original Instructions -

### 8.6. Air- bleed of hydraulic cylinder

If the lift movement is springy and irregular, air is contained in the lift cylinder, which now must be evacuated.

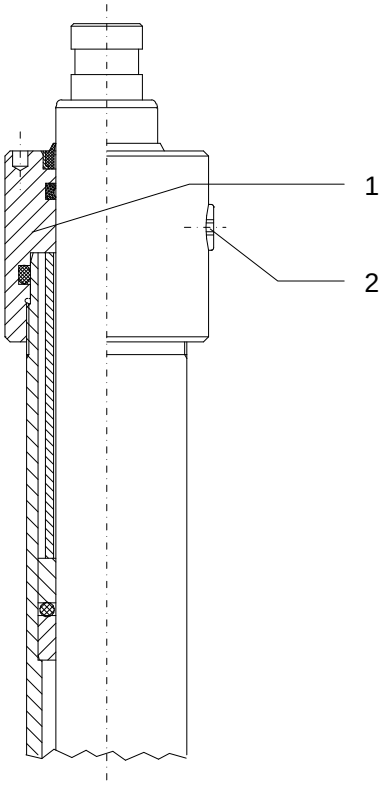


1) cylinder head
2) vent screw, accessible from front side of column

- Lift supporting arm and though the lift cylinder to maximum lift height.
- Open vent screw (only 1/4- 1/2 turn) by an Allen Key (5mm)
- Activate "LIFT" function
- Check the out coming oil till it is free of bubbles.
- Repeat this process two times to evacuate complete air from cylinder.
- Close vent screw carefully and wipe of the oil.
- Check oil level with supporting arm at minimum height.

- Original Instructions -

SERVOLIFT

# 9. Cleaning

## Table of Contents


**9. Cleaning 1**

9.1. Principle ..... 2

9.1.1. External Cleaning ..... 2

9.1.2. Internal cleaning: ..... 3

9.2. Product contact parts ..... 3


*- Original Instructions -*

The machine has to be cleaned periodically according to operational use or to production based requirements. Normally no danger of pollution from the machine itself is expected, as well as no or minor pollution are taken up from the environment, e.g. by cooling fans.

During the intended maintenance intervals, the machine has to be cleaned only just for prevention from operational malfunctions caused by accumulation of dirt-, dust- and production residuals. This has to be limited to external cleaning, removal of oil leakage and coming out lubricates, condensate and particles of out blowing compressed air, as well as exchange of installed filter.

Production based cleaning (e.g. during change of product) has to be performed according to customer's instructions (method, scope and period of repetition) and if necessary recorded.

## 9.1. Principle

Switch machine off at main switch, remove mobile unit from mains (pull off plug).

Do not use:
- abrasive cleanser
- aggressive detergents (acid or alkaline)
- polish or abrasive polishing paste
- abrasive clothes or scrub sponges

### 9.1.1. External Cleaning

Stainless steel surfaces:

- remove dust by soft cotton cloth, do not use compressed air
- use neutral cleaning agents with soft sponge or similar.
- rinse with soft water, dry with cotton cloth/ fleece.
- if necessary remove greasy dirt with alcohol (e.g. isopropyl)

Painted surfaces:

- as above, please note additionally data sheets of used cleaning detergent!
- pay attention, if alcoholic or solvent solutions are used.

**INFORMATION**

**Do not clean machine by hose or flush water, do not use solvents or hot water or steam and high pressure cleaners! Prevent water and cleaning detergents from internal the hoist, cabinet, over terminal boxes and motors or further electric, pneumatic or hydraulic components!**

Avoid direct contact of seals and rubber parts during sprinkling (w/o pressure) with cleaning detergents. Applied plastics and seal materials usually are resistant against alcoholic-, low acid- and alkaline solutions.

These are not resistant against chlorinated hydrocarbon, concentrated acids and alkaline solutions, polycyclical aromatic hydrocarbons, oils and fuels.
(exception according to execution or requirement)

- Original Instructions -

9.1.2. Internal cleaning:

- remove dust by soft cotton cloth and/ or clean housing by vacuum cleaner.
  (do not used compressed air to blow out housings)
- remove greasy dirt with alcohol (e.g. isopropyl.
- take up spilled oil by absorptive clothes.
- do not use water or watery solutions.

## 9.2. Product contact parts

- These parts are usually manufactured by high quality material, thus deviating from a.m. principles regarding cleaning and disinfection, other cleaning agents and procedures can be used, which correspond to company's internal and product specific validation requirements

  Supplier has to be informed at order about possibly used detergents and methods or procedures to determine appropriate materials. Based on our experience no objections are raised against detergents and disinfection solutions used within the pharmaceutical industry.

- In case of doubt contact our service department, describing detergent and machine part intended to be cleaned

**INFORMATION**

**Environment polluting cleaning and disinfection agents must be disposed according to national regulations. Consider corresponding safety data sheets.**

- Original Instructions -

# 10. Disposal

## Table of contents

**10. Disposal** **1**
10.1. General ..... 2

- Original Instructions -

## 10.1. General

The machine consists of various components and parts, which have to be disposed or recycled according to local or legal provisions.

**INFORMATION**

**Clean machine carefully from all product residuals.**

After complete emptying of the hydraulic system and removal of the machine from place of installation, disassemble it and sort parts into the following groups:

- steel scrap
- aluminium
- plastic
- electronic parts and cables
- hydraulic oil and grease

**INFORMATION**

**Please note, that especially hydraulic cylinders and the pipe and hose system will still contain oil even with emptied hydraulic tank.**
**Environment polluting lubricants and cleaning agents have to be disposed properly according to effective regulations.**

- Original Instructions -

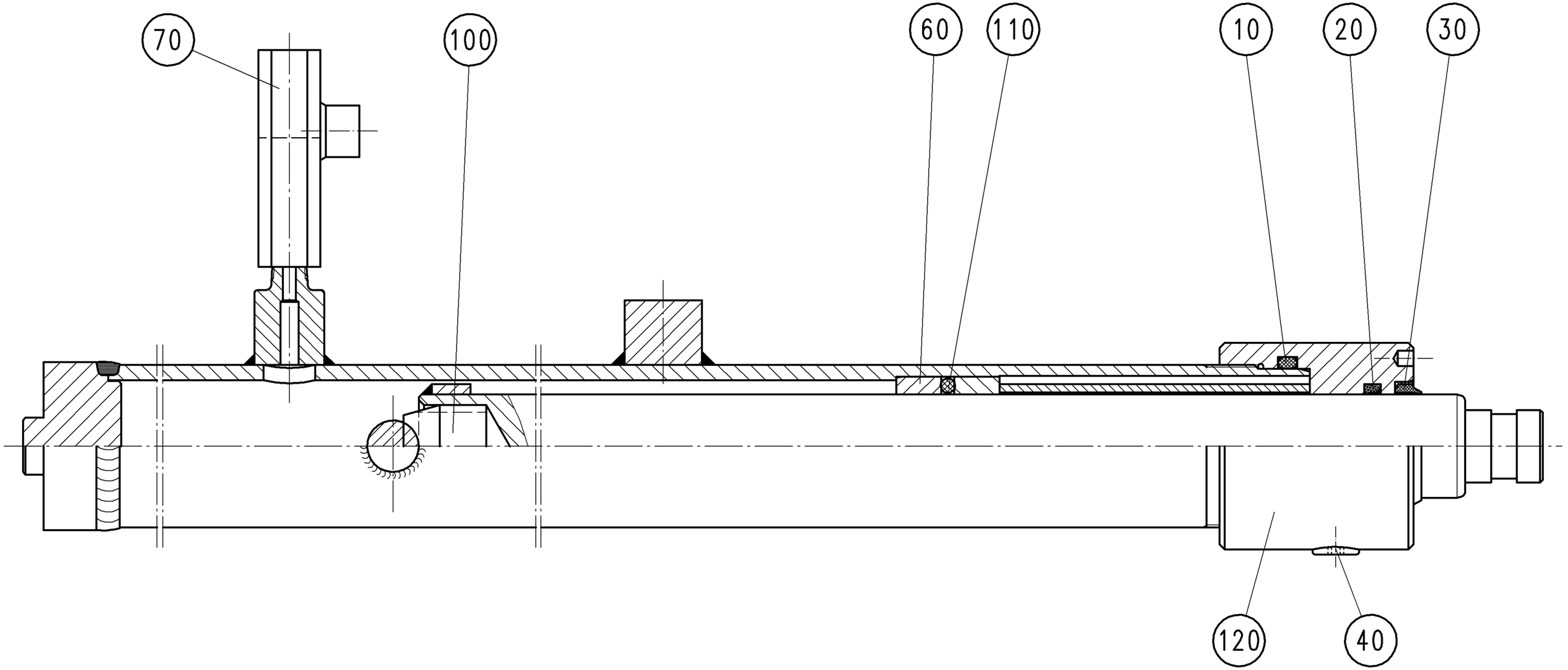


| POS. | PCS. | DESCRIPTION | DRAWING NO. | ART.-NO. | SPECIFICATION |
|---|---|---|---|---|---|
| 10 | 1 | O-RING | | 100819 | 59.2x5.7 |
| 20 | 1 | ROD SEAL | | 101739 | S39-40-48-6.3 |
| 30 | 1 | ROD WIPER | | 100803 | 40-50-7-10 AS |
| 40 | 1 | SCREW PLUG | | 100507 | R1/8" |
| 60 | 2 | GUIDE BUSHING | 00-41-106 | 112397 | ø54xø40-17,5 lg.- Rg7 |
| 70 | 1 | CHECK VALVE | | 101190 | RH1 |
| | 1 | LINE RUPTURE VALVE | | 110258 | LB 1 C-10 |
| 100 | 1 | RUBBER BUMPER | | 112325 | 80-32 - EFFBE-Urelast 90 Shore |
| 110 | 1 | O-RING | | 100812 | 41,2x5,7 |
| 120 | 1 | CYLINDER HEAD ø40 | 00-41-102 | 101725 | Rd 80-75 lg.-DIN 1691-GGG 25 |
| | 1 | SEAL SET | | 112432 | POS.: 10, 20, 30, 100, 110 |

Projekt-Nr.

Maße ohne Toleranzangaben: mittel ISO 2768

Oberflächenreihe: R 2 DIN ISO 1302

Maßstab 1:1,5 | Art.-Nr. -

Werkstoff, Halbzeug

| Zust. | Änderung | Datum | Name |
|---|---|---|---|
| | | | |

| | Datum | Name |
|---|---|---|
| Erst. | 02.05.02 | schmitt |
| Änder. | 02.05.02 | |
| Bearb. | 07.12.04 | Pielawa |
| Gepr. | 04.04.05 | luckerm |

SERVO LIFT GmbH
Handhabungstechnik
Albert-Einstein-Str.9
D-77656 Offenburg-Zunsweier
Tel.0781/6100-0

Benennung

# Liftcylinder plungertype ø40
## Spare and wear parts

Zeichnungsnummer U:0205\ZEI\SCKDV1EQ.ZEI

00-41-101V

Index 0

Blatt 2/3

Ersatz für: DO-41-101

Ersatz durch:

ClibPDF - www.fastio.com

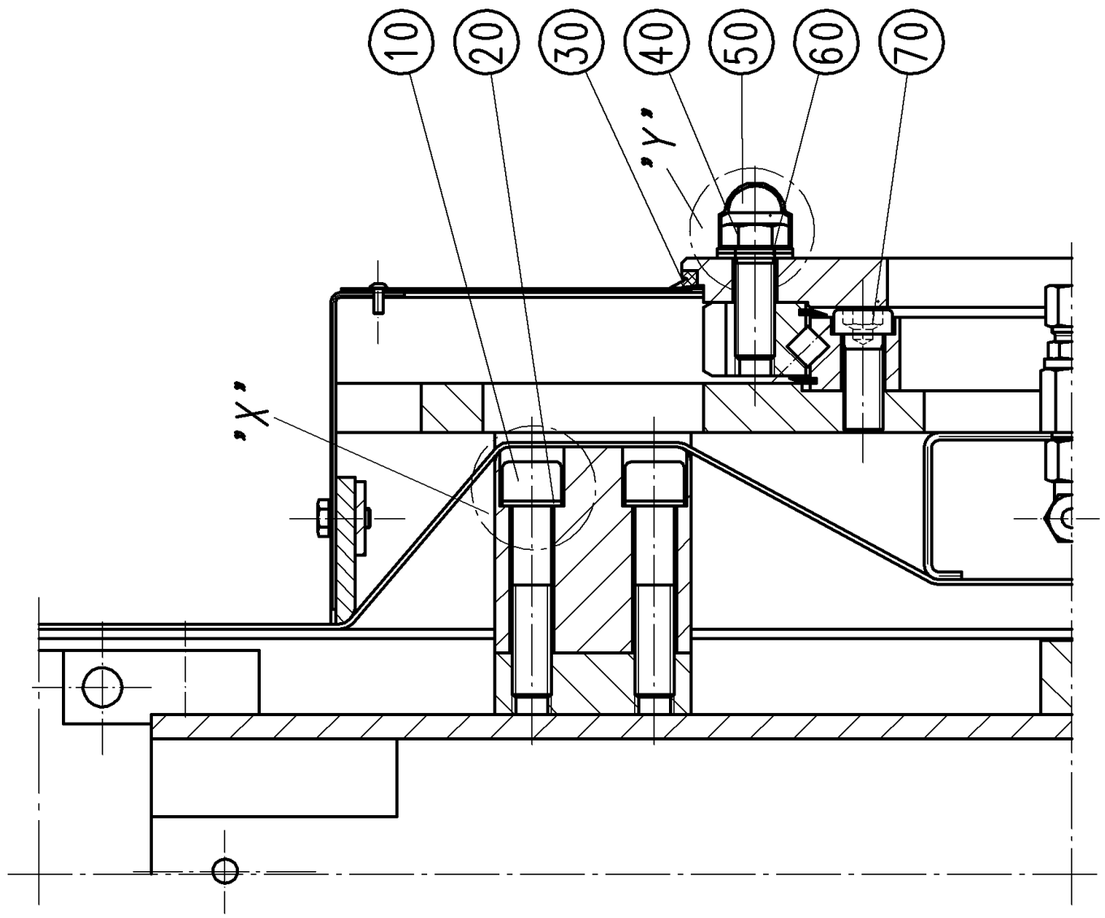


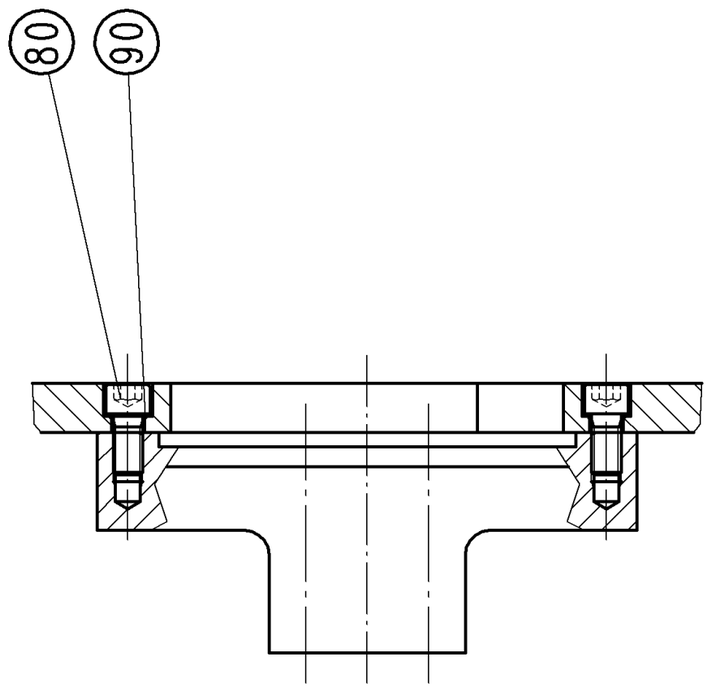


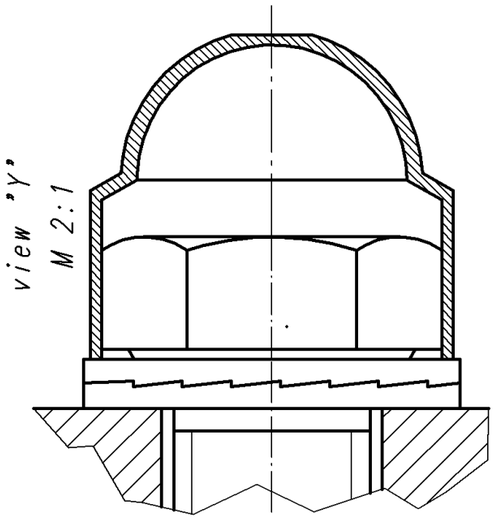


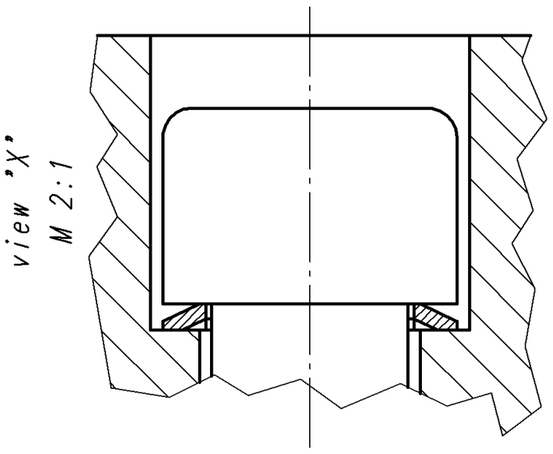


# 70 treated with Loctite 243
# 10, 40, 80: thread and screw head
lubricated with Klüberpaste UH 84-201.

| Pos. | POS. | Description | ART.-NO. | Specification | torque |
|---|---|---|---|---|---|
| 10 | 4 | cylinder head screw | 100322 | ISO 4762 - M 16x80 - 8.8 galv. | Ma = 226 Nm |
| 20 | 4 | lock washer | 111815 | Schnorr S 16 | |
| 30 | 1 | V-Seal | 112333 | V-Seal Typ VL 300 | |
| 40 | 12 | hexagonal bolt | 100379 | ISO 4017 - M 16x45 - 8.8 galv. | Ma = 205 Nm |
| 50 | 12 | protecting cap | 103214 | M 16 - SW24 - GPN 1000 - black | |
| 60 | 12 | lock washer | 125207 | DIN 25201-M16 SP SS 5/8" | |
| 70 | 12 | cylinder head screw | 106884 | DIN 6912- M 16x40 - 8.8 galv. | Ma = 144 Nm |
| 80 | 6 | cylinder head screw | 111816 | DIN 4762 - M 12x25 - 10.9 GEO | Ma = 135 Nm |
| 90 | 6 | lock washer | 122545 | Schnorr S 12 | |

| Zust. | Änderung | Datum | Name |
|---|---|---|---|
| b | Anzugsmomente geändert, 111 | 04.04.2011 | 07:09:37 Hackbarth |
| a | 111815 war 111348 ; 122545 | 24.10.2005 | Nass |

Projekt-Nr.

Maße ohne Toleranzangaben: ISO 2768

Oberflächenreihe: R 2 DIN ISO 1302

| | Datum | Name |
|---|---|---|
| Erst. | 26.10.04 | Pielawa |
| Änder. | | |
| Bearb. | 04.04.11 | luckerm |
| Gepr. | 04.04.11 | luckerm |

SERVO LIFT GmbH
Hebehubungstechnik
Albert-Einstein-Str.9
D-77656 Offenburg-Zunsweier
Tel.0781/6100-0

Maßstab 1:2,5 | Art.-Nr. -

Werkstoff, Halbzeug

Benennung

# Assembly of Front Case and Bearing NG 1000/20, 12 holes

Zeichnungsnummer: STANDARD\04\TUNC52YN.ZEI

04-39-003

Index: b

Blatt: 2/3

Ersatz für: | Ersatz durch:

ClibPDF - www.fastio.com

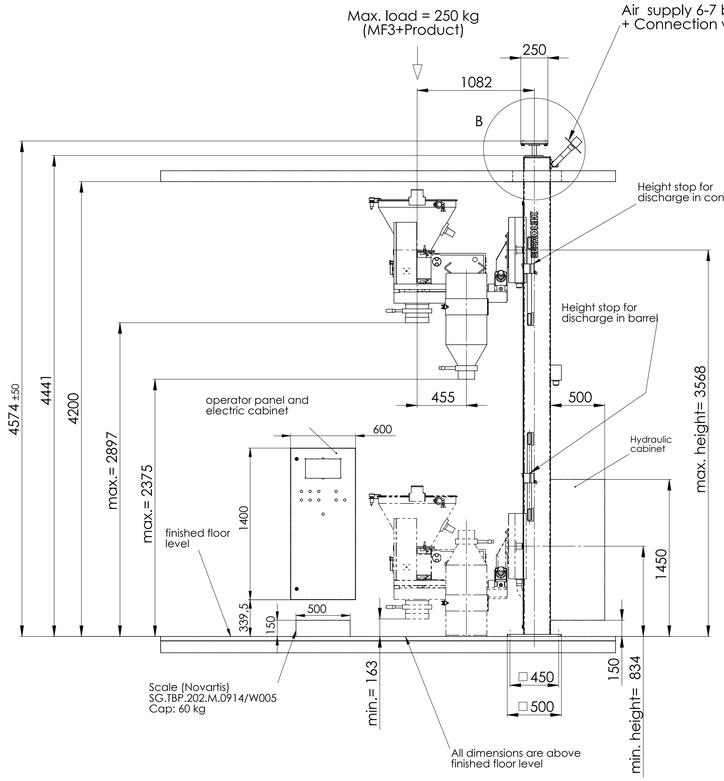


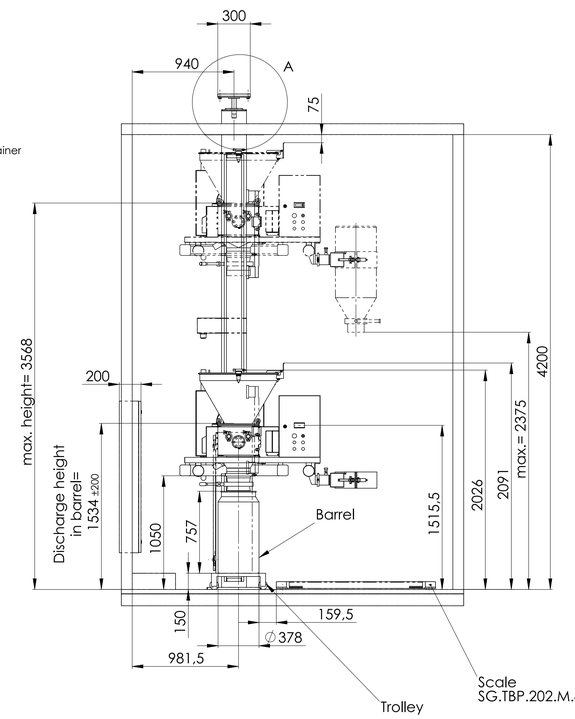


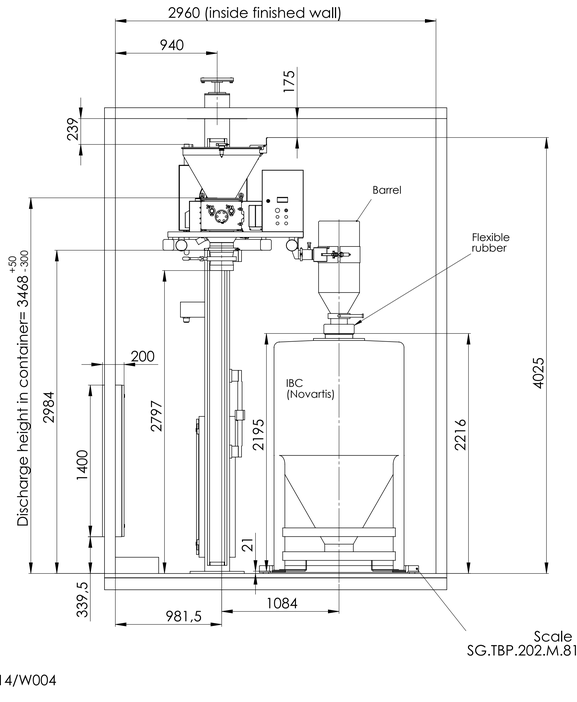


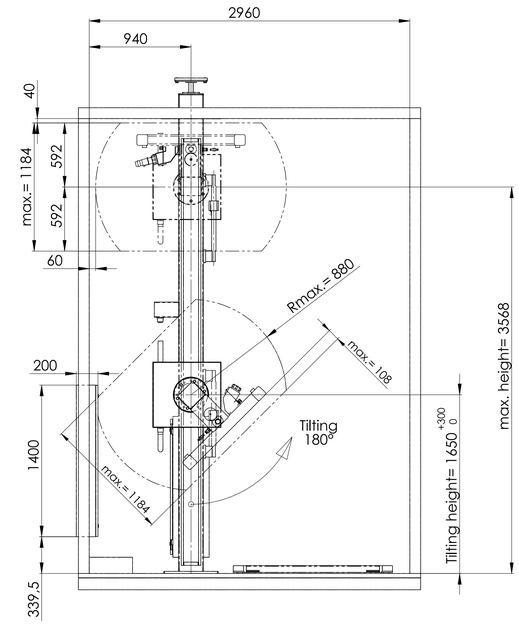


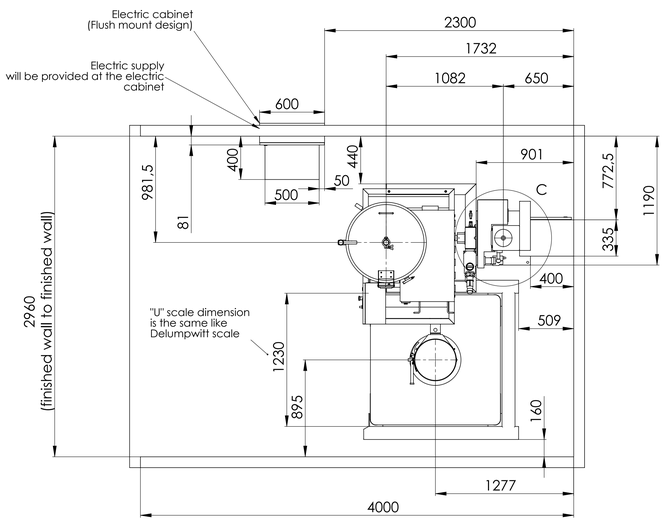


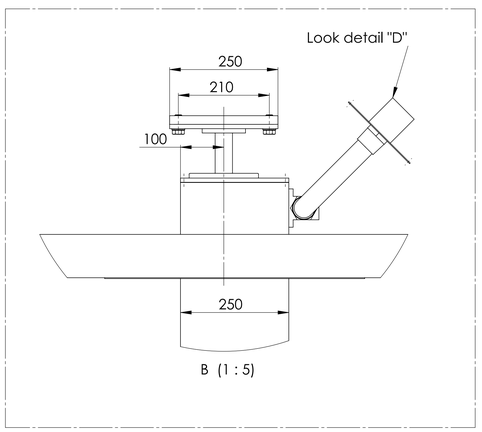


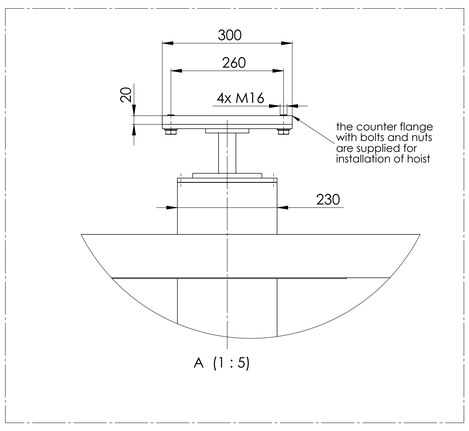


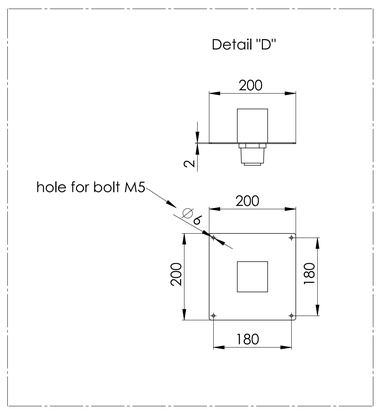


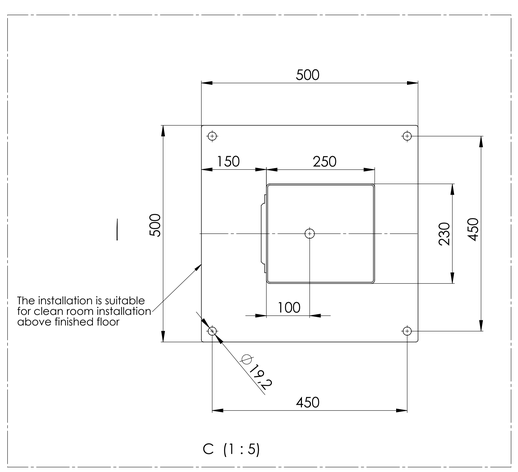


**General notes:**
**1. Material of construction:**
**-Product contact parts AISI 316/316L**
**-Non-product contact parts AISI 304/304L**
**2. Surface finish:**
**-Product contact part < Ra 0,4**
**-Non-product contact parts < Ra 1,4**
**3. All non-metallic parts in contact with product shall be FDA approved food grad**
**4. Design fabrication shall comply with GMP requirement with no sharp corners, dead legs, easily drainable and crevices free.**

**SG.TBP.202.M.5216 &**
**SG.TBP.202.M.5216 / C001**
**Total installed empty weight= 1500 kg**
**Total operating weight: 2600 kg**

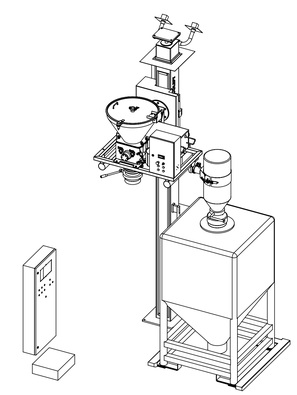

Equipement TAG: SG.TBP.202.M.5216/C001

| | | | | | | | |
|---|---|---|---|---|---|---|---|
| SERVOLIFT GmbH, 77656 Offenburg, Germany, www.servolift.de | | | | Allgemeintoleranzen für Schweißkonstruktionen nach ISO 13920 | | Maßstab 1:20 | BG/Zg.-Nr. 00 |
| | | | | | | Werkstoff: | |
| | | | | | | Halbzeug: Symbol | |
| | | | | | | Fertigmaß: | |
| | | | | | | Benennung | Maschinen-Hubsäule |
| | | | | Maße ohne Toleranzangaben nach ISO 2768 | Oberflächenreihe R DIN ISO 1302 | | Post Hoist For Mill MF3 |
| | | | Datum | Name | | Ident.-Nr. | Index / Blatt |
| | | | Erst. | 30.05.201 | schilli | 12552-00-001 | a / 1 von 1 |
| a | Änderungen nach Kundenwunsch | 14.08.201 | schilli | Freig. | 13.07.201 | schilli | A0 |
| Zust. | Änderung | Datum | Name | | | Ersatz für: | Ersatz durch: |

**perma-tec GmbH & Co. KG**
Hammelburger Str. 21
97717 EUERDORF

GERMANY

Tel: +49 (0) 9704 609-0

Fax: +49 (0) 9704 609-50

E-Mail: info@perma-tec.com

Homepage: www.perma-tec.com

01/07/2011 · A01 · Part no. 90.010.007

perma CLASSIC

perma CLASSIC

**The World of Automatic Lubrication**

perma

# perma CLASSIC


| | | |
|---|---|---|
| Betriebsanleitung | DE | 18 - 19 |
| Ръководство за експлоатация | BG | 18 - 19 |
| 操作指南 | CN | 20 - 21 |
| Návod k obsluze | CS | 20 - 21 |
| Brugsanvisning | DA | 22 - 23 |
| Εγχειρίδιο λειτουργίας | EL | 22 - 23 |
| Operating Instructions | EN | 24 - 25 |
| Manual de instrucciones | ES | 24 - 25 |
| Käyttöohje | FI | 26 - 27 |
| Instructions de service | FR | 26 - 27 |
| संचालन नरि्देश | HI | 28 - 29 |
| Üzemeltetési utasítás | HU | 28 - 29 |
| Istruzioni per l'uso | IT | 30 - 31 |
| 取扱説明書 | JP | 30 - 31 |
| Gebruiksaanwijzing | NL | 32 - 33 |
| Bruksanvisning | NO | 32 - 33 |
| Instrukcja obsługi | PL | 34 - 35 |
| Manual de instruções | PT | 34 - 35 |
| Manual de exploatare | RO | 36 - 37 |
| Руководство по эксплуатации | RU | 36 - 37 |
| Návod na obsluhu | SK | 38 - 39 |
| Navodila za uporabo | SL | 38 - 39 |
| Driftsanvisningar | SV | 40 - 41 |


© 2010 perma-tec GmbH & Co. KG

- 1 - - 2 -

I

- 3 - - 6 -

II

- 7 - - 8 -

III

- 9 -

IV

- 10 -

V

- 11 -

VI

- 12 -

VII

- 13 -

VIII

- 14 -

IX

- 15 -

X

I

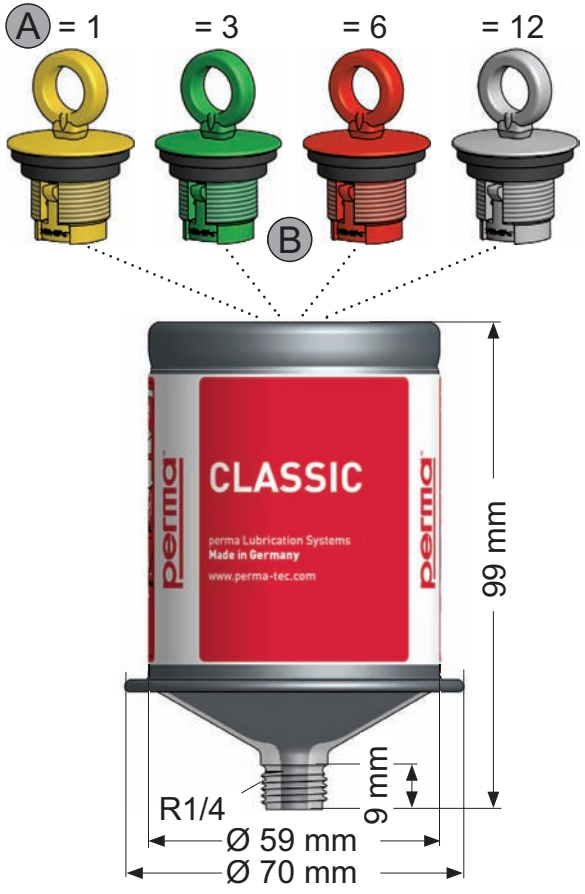




120 cm³

145 g ≈ 260 g

max. 4 bar / 58 psi

0 °C
+ 32 °F
+ 40 °C
+ 104 °F

CL – JJWW (yyww) – ######

C + 20 °C
+ 68 °F
20 50
max. 1 J (y)

360°

II

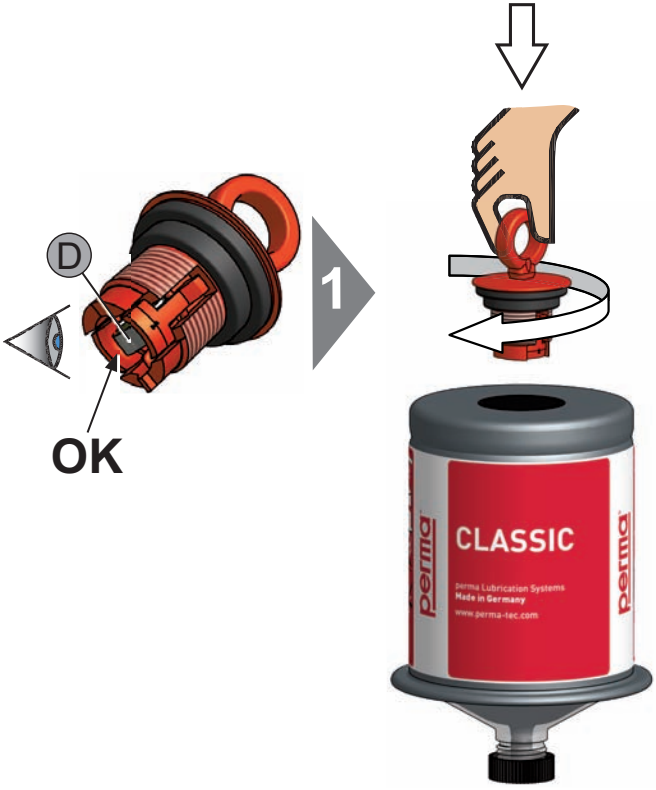
D
OK
1
CLASSIC
perma Lubrication Systems
Made in Germany
www.perma-tec.com
perma

2
CLASSIC
perma Lubrication Systems
Made in Germany
www.perma-tec.com
perma
3

3
4
CLASSIC
perma Lubrication Systems
Made in Germany
www.perma-tec.com
perma
4

KLACK! KLACK!
= OK
CLASSIC
perma Lubrication Systems
Made in Germany
www.perma-tec.com
perma
5

III

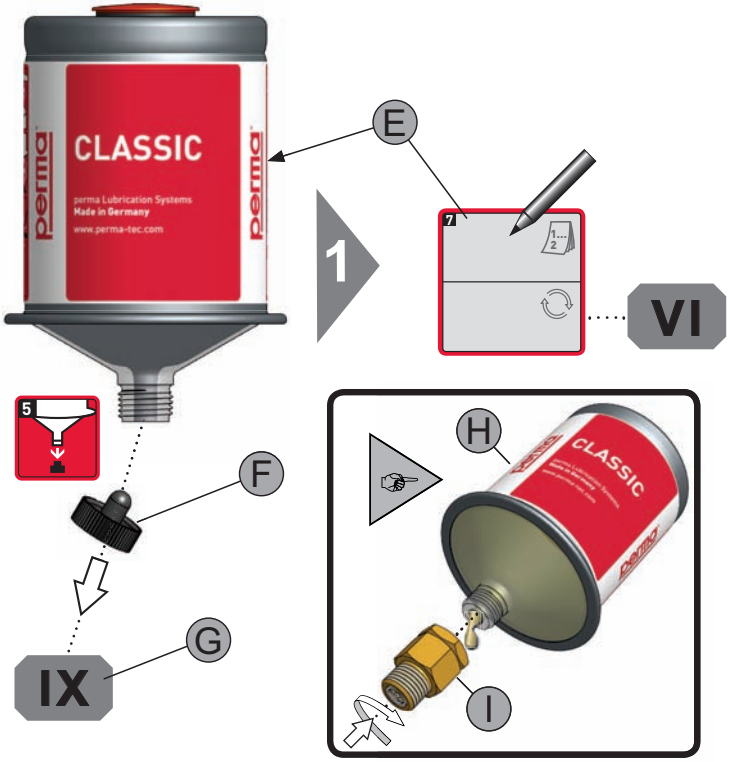
CLASSIC
perma Lubrication Systems
Made in Germany
www.perma-tec.com
E
1
VI
F
G
IX
H
I

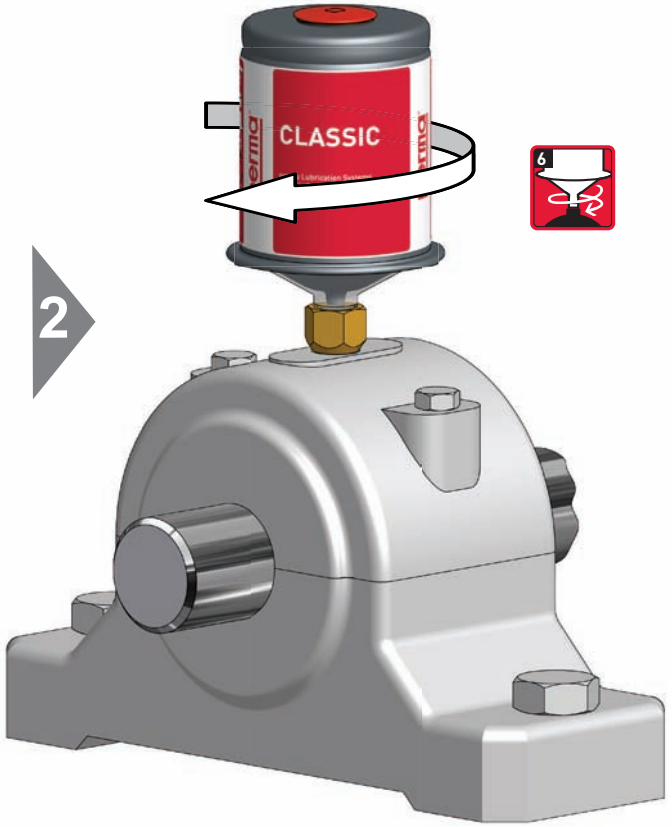
CLASSIC
2
6

# IV

| Ø- | | | | |
|---|---|---|---|---|
| 0 °C/32 °F | 4 | 8 | 15 | > 18 |
| +10 °C/50 °F | 2 | 5 | 8 | 18 |
| +20 °C/68 °F | 1 | 3 | 6 | 12 |
| +30 °C/86 °F | 0,8 | 2 | 3 | 6 |
| +40 °C/104 °F | 0,6 | 1 | 2 | 3 |

A

J ≈ 24 h (⇨•⇦ 0 bar / 0 psi)

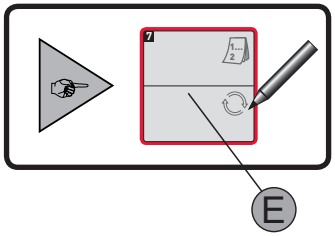




# V

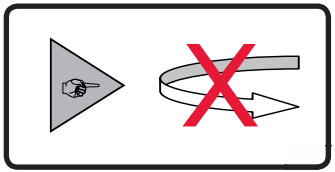

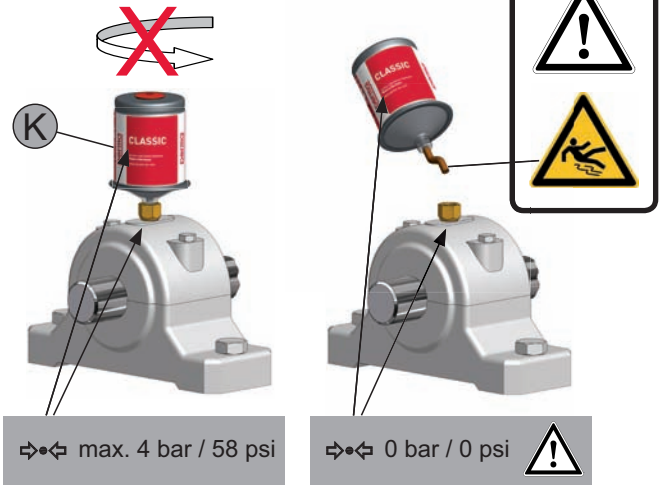

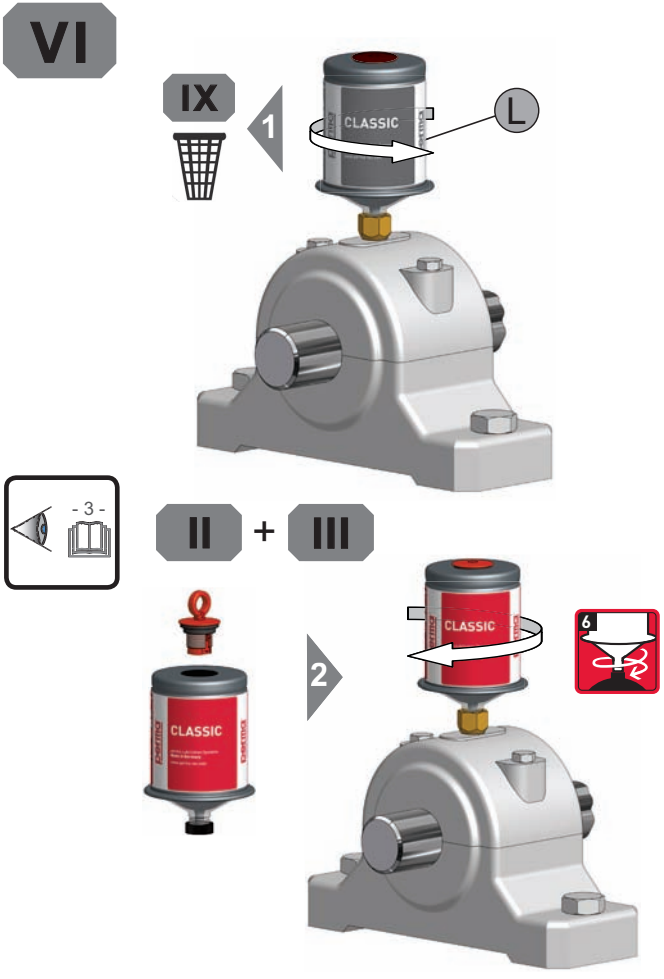
VI
IX
1
L
CLASSIC
- 3 -
II + III
2
6
CLASSIC
CLASSIC



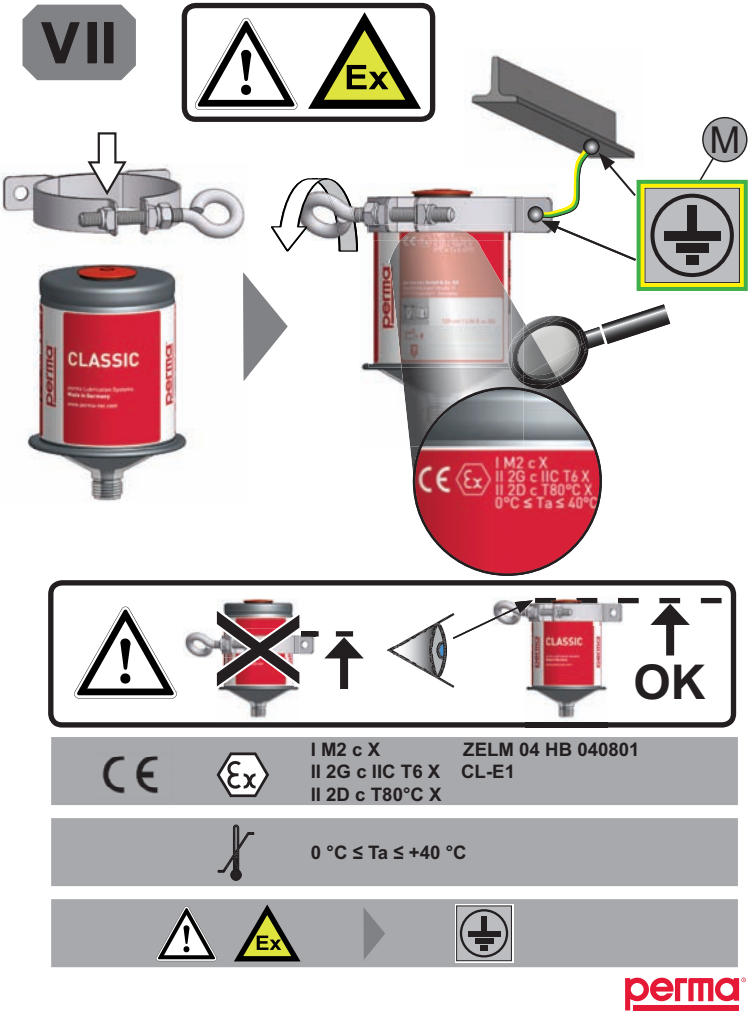
VII
Ex
M
CLASSIC
perma
I M2 c X
II 2G c IIC T6 X
II 2D c T80°C X
0°C ≤ Ta ≤ 40°C
OK
I M2 c X
II 2G c IIC T6 X
II 2D c T80°C X
ZELM 04 HB 040801
CL-E1
0 °C ≤ Ta ≤ +40 °C
Ex

## VIII = N

| O | P | Q |
|---|---|---|
| | | II 5 |
| < | Ta > +40 °C | OK Ta < +40 °C |
| | | Ta > +40 °C |
| > | Ta < 0 °C | IV |
| | > 4 bar 58 psi | |



## IX

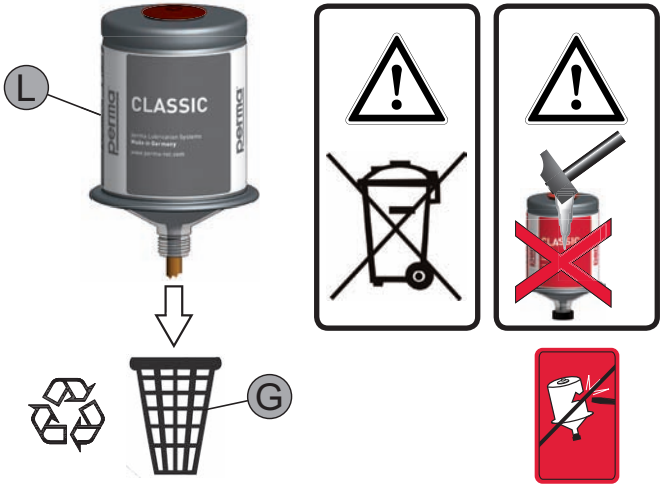

X

## EC declaration of conformity

- according to ATEX - Directive 94/9/EC

The manufacturer

**perma-tec GmbH & Co. KG**
**Hammelburger Straße 21**
**97717 Euerdorf**
**Germany**

hereby declares that the product as described in the given statement conforms to the regulations appertaining to the directives referred to above, including any amendments thereto which are in force at the time of the declaration.

| | |
|---|---|
| Product description: | Automatic lubrication system |
| Product name: | CLASSIC |
| Type: | 120 |
| Product identification number: | CL-E1 |

The following harmonised standards were applied:

| | | |
|---|---|---|
| ATEX: | EN 1127-1:2007 | EN 1127-2:2002 + A1:2008 |
| | EN 13463-1:2009 | EN 13463-5: 2003 |

Ex-Marking: I M2 c X
II 2G c IIC T6 X
II 2D c T80°C X
0 °C ≤ Ta ≤ +40 °C

EC-Confirmation of Retention Number: ZELM 04 HB 040801

Euerdorf, 1 December 2010

perma-tec GmbH & Co. KG

Walter Graf, Managing Director

Egon Eisenbacher, Technical management

- 18 - Deutsch
- 19 - Български
- 20 - 中文
- 21 - Česky
- 22 - Dansk
- 23 - Ελληνικά
- 24 - English
- 25 - Español
- 26 - Suomi
- 27 - Français
- 28 - हिंदी
- 29 - Magyar
- 30 - Italiano
- 31 - 日本語
- 32 - Nederlands
- 33 - Norsk
- 34 - Polski
- 35 - Português
- 36 - Română
- 37 - Русский
- 38 - Slovensky
- 39 - Slovenščina
- 40 - Svenska
- 41 -

## EN

This operating manual is intended for the safe operation of the automatic lubrication system used for the lubrication of roller- and sliding bearings, chains, guidelines, open gears, etc.

The lubrication system was designed for a one-time use only. Do not open or take the unit apart!

Avoid contact of oil/grease with eyes, skin and clothing; also avoid swallowing of oil/grease.

Prevent oil/grease from getting into soil or sewer system.

Observe safety data sheets of oil/grease.

You may download lubricant data sheets from our web site (www.perma-tec.com) or ask your local supplier.

We accept no liability for any damages and malfunctions which are caused by inappropriate usage and inappropriate operations on or with the lubricator.


I **Properties**
II **Activation**
III **Installation**
IV **Discharge periods**
V **During operation**
VI **CLASSIC exchange**
VII **Ex-protection**
VIII **Trouble shooting**
IX **Waste disposal**
X **Declaration of conformity**


A Discharge period in months
B Activator screw
C Storage conditions
D Gas generator (metal pellet)
E Installation-/Exchange date
F Plug
G Oil containing waste
H Oil filled
I Oil retaining valve
J Time until first discharge
K In operation
L CLASSIC empty
M Grounding with bracket
N The right lubricant amount
O Error
P Cause
Q Corrective action

## ES

Las instrucciones sirven para trabajar con seguridad en y con el sistema de lubricación automática, que lubrica rodamientos, cojinetes de deslizamiento, cadenas, guías, engranajes abiertos, etc.

Este sistema de lubricación es de un solo uso y no debe ser abierto ni desmontado.

Evitar el contacto de aceite/grasa con los ojos, la piel y la vestimenta, así como la ingestión de aceite/grasa.

No permitir que el aceite/la grasa llegue a la tierra ni al alcantarillado.

Observar las hojas de datos de seguridad de los aceites y grasas.

Las hojas de datos de los lubricantes se pueden obtener en nuestra página principal (www.perma-tec.com) o a través del distribuidor local.

No se asumirá la garantía por aquellos daños y anomalías de funcionamiento que se originen por haber utilizado inapropiadamente o por haber trabajado inadecuadamente en o con el sistema de lubricación.


I **Propiedades**
II **Activación**
III **Instalación**
IV **Tiempo de lubircación**
V **Durante la lubricación**
VI **Cambio CLASSIC**
VII **Protección Ex**
VIII **Eliminación de fallos**
IX **Eliminación de residuos**
X **Declaración de conformidad**


A Tiempo de dosificación en meses
B Tornillo activador
C Condiciones de almacenamiento
D Generador de gas (pastilla metálica)
E Fecha de instalación/cambio
F Tapón cierre
G Residuos con grasa
H Relleno con aceite
I Válvula dosificadora de aceite
J Tiempo de puesta en marcha
K En funcionamiento
L CLASSIC vacío
M Derivación en tierra con abrazadera
N Cantidad correcta a dosificar
O Error
P Causa
Q Remedio

# MOLYDUVAL
# Biolube 46

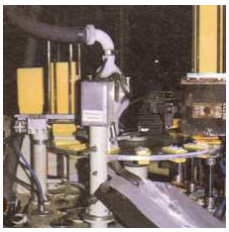

## Lubrication Oil for Food Industry

A high performance versatile lubricant for applications where incidental contact with foodstuff may occur, or where a clean, non-toxic lubricant is prefered. The used base fluids are released to DAB/FDA/USDA as well as the containing corrosion protective and wear protective additives.

## Properties

* good cleaning properties
* water and sea water resistant
* food grade - all components conform to USDA H1 or the FDA regulations for Lubricants in incidental food contact
* clear and transparent
* tasteless
* good penetrative properties
* odor less
* unsolube in water

## Applications

* for gear boxes in food industry
* for hydraulic equipment in food and pharma industry
* for non-cutting metal working
* for chains in food industry, for packing and filling machines
* for chains, drive and transport chains, in conveying machines, pasteurize plants, sorting stations, peelers, packing and labelling machines, shrinking tunnels
* for anti-friction and sleeve bearings in textile industry
* for rolling and sleeve bearings
* as lubricant for rubber, latex, and plastics
* for hooks, sleeve elements, rolls, joints, clutches
* for metal working of aluminium, copper and their alloys

## Technical Datas

| | | |
|---|---|---|
| Color | | transparent |
| Base Fluid | | Paraffin |
| Viscosity Class | ISO-VG | 46 |
| Density 20°C | kg/m³ | 860 |
| Temperature Range | °C | -10 -> +90 |
| Viscosity 40°C | mm²/s | 46 |
| Flash Point | °C | 190 |
| Viscosity Index | | 110 |
| Pour Point | °C | -18 |
| Wear Protection FZG Test A/8.3/90 | Grade | 12 |

*The indicated service temperatures are guide values depending on the lubricants composition and on the application. They may vary in case of special influences or ongoing use.*

For further information, please see our website www.molyduval.com or consult your local representative.

The technical data in this information sheet represents our present knowledge and is based on our general experience. It is intended to give information of possible applications to a reader with technical experience. It constitutes neither an assurance of product properties nor does it release the user from the obligation of performing preliminary tests with the selected product to ensure that the product is safe, effective and fully satisfactory for the intended end use. It does also not form part of any sales contract as guaranteed properties of the delivered material.

The information may be affected by changes occurring subsequent to the date of printing in the blend formulation or methods of application. Updating : 14.09.2010

# EC-Safety Data Sheet conforming to 1907/2006/EG, Article 31

MOLYDUVAL Biolube 46



### 1. Commercial Product Name and Company/Manufacturer

| | |
|---|---|
| 1.1 Trade Name: | MOLYDUVAL Biolube 46 |
| 1.2 Product Application | for gear boxes in food industry<br>for hydraulic equipment in food and pharma industry<br>for non-cutting metal working<br>for chains in food industry, for packing and filling machines<br>for chains, drive and transport chains, in conveying machines, pasteurize plant |
| 1.3 Producer / Distributor: | MOLYDUVAL GmbH * Halskestr.6 * D-40880 Ratingen * H.Wunsch |
| 1.4 Emergency Phone | +49 (2102) 9757-00 |

### 2. Hazards Identification

| | |
|---|---|
| 2.1 Classification | No health hazards known. Product may be used fro lubrication of food processing equipment. |
| 2.2 Information pertaining to particular dangers for man | Is improbable, that the product leads to eye irritations, to a provoking the skin, to an endangerment of the respiratory organs, to a provoking of the lungs or that swallowing leads to effects injurious to health. |
| 2.3 Information pertaining to particular dangers for environment: | Although no environmental damages and bioaccumulations were expected, withdrawing should be avoided into the environment. Into drains to arrive do not leave |

### 3. Composition - Information on Ingredients

| | |
|---|---|
| 3.1 Composition - Information on Ingredients | Mixture from paraffinic base fluids and additives. All components conform to USDA H1. |

### 4. First Aid Measures

| | |
|---|---|
| 4.1 General Instructions | Remove victim from danger zone, without exposing yourself to any personal risk. Remove wetted clothing and shoes and clean items before using them again. |
| 4.2 After Inhalation | Not applicable. |
| 4.3 After Skin Contact | Wash with soap and much water. |
| 4.4 After Eye Contact | Flush with water |
| 4.5 After Ingestion | Do not induce vomiting. Seek medical advise |
| 4.6 Symptoms and effects | no |
| 4.7 Instructions for attending physician | Prolonged or repeated exposure may cause skin discomfort. |

### 5. Fire-Fighting Measures

| | |
|---|---|
| 5.1 Extinguishing media - Usable | Water Spray, Powder, Alcohol Foam, Sand, CO2 |
| 5.2 Extinguishing media - Not usable | Waterjet |
| 5.3 Special personal protection | No |
| 5.4 Further information | Water may cause splattering. |

### 6. Accidental Release Measures

| | |
|---|---|
| 6.1 Special Personal Protection | Use oil-proofed clothing |
| 6.2 Special Environmental Protection | Do not expose to environment or in effluent water. |
| 6.3 Absorbing Materials | Use oil sucking materials f.e chemical absorbents. |
| 6.4 Cleaning Methods | Take up mechanically. |

### 7. Handling and Storage

| | |
|---|---|
| 7.1 Handling | No special steps |
| 7.2 Storage | No special steps |

### 8. Exposure Controls / Personal Protection

| | |
|---|---|
| 8.2 Eye Protection: | None required |
| 8.3 Skin Protection: | None required |
| 8.4 Respiratory Protection: | None required |
| 8.5 Technical Protection | None required |

### 9. Physical and Chemical Properties

| | |
|---|---|
| 9.1 Appearance Form | liquid |
| 9.2 Color | light |
| 9.3 Appearance | like oil |
| 9.4 Odour | without |
| 9.6 Boiling Point / Boiling Range | --°C |
| 9.7 Melting Point / Melting Range | -15°C |
| 9.8 Flash Point | n.b. |
| 9.13 Specific Gravity, 20°C | 0,86 g/cm³ |
| 9.14 Water Solubility | N |
| 9.15 Viscosity, 40°C | 47 mm²/s |

### 10. Stability und Reactivity

| | |
|---|---|
| 10.1 Stability | This product is stable in normal-use temperatures and will not react violently with water |
| 10.2 Conditions to be avoided | No |
| 10.3 Substances to be avoided | No |

### 11. Toxicological Information

| | |
|---|---|
| 11.1 Toxicological Tests | Under current criteria, this material is considered to be non-hazadous (is not to be marked). |
| 11.2 At Eye Contact | No hazard. |
| 11.3 At Skin Contact | No hazard. |
| 11.4 At Inhalation | no data available |
| 11.5 At Ingestion | May cause sickness and vomiting. |

### 12. Ecological Information

| | |
|---|---|
| 12.1 Ecological Information | Product is WGK 2. Don't let into canalisation. |

### 13. Disposal Considerations

| | |
|---|---|
| 13.1 Disposal Considerations | May not be disposed together with domestic rubbish. Disposal in compliance with federal, state, and local laws. EAK Waste Product Code : 130205 |

### 14. Transport Information

| | |
|---|---|
| 14.1 UN-No | No |
| 14.2 Land Transport ADR/GGVS RID/GGVE | No |
| 14.3 Sea Transport ADNR/IMDG/GGVSee | No |
| 14.4 Air Transport IATA/ICAO | No |
| 14.5 Other | No transport regulations. |

### 15. Regulatory Information

| | |
|---|---|
| 15.1 Limits for Disposal at Places of Employment | No MAK Values defined |
| 15.2 Characterisation symbols | No Precautionary Labels. |
| 15.5 Further Prescriptions | WGK 1 |

### 16. Further Information

| | |
|---|---|
| 16.1 Further Information | Although the information on this safetysheet is based on the by us known and reliable considdered information, we can neither accept any responsility for the use of it. Please contact us if more infos are needed. |

# MOLYDUVAL
# Soraja FM 372

## Special Grease for Food Industry

Virtually odourless and tasteless lubrication grease. It is made with a white mineral oil and an aluminium complex soap thickener. Extreme care is taken throughout the manufacture to protect its purity. If any incidental contact with food occurs, the grease will not affect the colour, odour, or taste of the product.

Contains an FDA approved oxidation inhibitor which gives high stability against chemical changes. It also contains rust inhibitor protecting bearings and metal surfaces subjected to wet conditions, humidity, water washing, steam. It also protects during periods of machine idleness. It resist water washout and provides a sealing of the bearing against entrance of water, or fruit and vegetable juices. Because it is compatible with beverages and food juices, it maintains his consistency. And because it is shear-stable, it also maintain its consistency when it is severely worked in the bearing.

## Properties

* free from mineral oil
* very good corrosion protection
* suitable for centralized lubrication systems
* excellent tackiness
* good resistant against cold and hot water, even sea water
* excellent wear protection
* food grade - all components conform to USDA H1 or the FDA regulations for Lubricants in incidental food contact
* very good water resistance
* withstands many alcohols and acids
* good resistant against washing off
* good resistant against cold and hot water, even sea water

## Applications

* for anti-friction and sleeve bearings at high temperatures, in ovens, ventilators, engines
* for bearings in refrigeration equipment
* for chains in food industry, for packing and filling machines
* for bearings at funnels and weirs
* for slide bars in butcheries or slaughterhouses
* as corrosion preservative
* for gear boxes in food industry
* for anti-friction and sleeve bearings in fish production
* for hooks, sleeve elements, rolls, joints, clutches
* for slow running bearings, especially heavy loaded bearings

## Technical Datas

| | | |
|---|---|---|
| Color | | white |
| Consistency Class NLGI | | 2 |
| Name | | KPF2K-20 |
| Base Fluid | | White Oil |
| Name | | ISO-L-XBCEB2 |
| Density 15°C | kg/m³ | 1000 |
| Water Resistance Static | Grade | 0 |
| Water Resistance Static | Grade | 1-90 |
| Temperature Range | °C | -20 -> +120 |
| Temperature Range kurzzeitig bis | °C | 140 |
| Corrosion Protection Kupfer | Grade | 1b |

For further information, please see our website www.molyduval.com or consult your local representative.

The technical data in this information sheet represents our present knowledge and is based on our general experience. It is intended to give information of possible applications to a reader with technical experience. It constitutes neither an assurance of product properties nor does it release the user from the obligation of performing preliminary tests with the selected product to ensure that the product is safe, effective and fully satisfactory for the intended end use. It does also not form part of any sales contract as guaranteed properties of the delivered material.

The information may be affected by changes occurring subsequent to the date of printing in the blend formulation or methods of application. Updating : 02.09.2009

# EC-Safety Data Sheet conforming to 1907/2006/EG, Article 31

MOLYDUVAL Soraja FM 372

*Date 23.03.2011 Page 1*

### 1. Commercial Product Name and Company/Manufacturer

| | |
|---|---|
| 1.1 Trade Name: | MOLYDUVAL Soraja FM 372 |
| 1.2 Product Application | for gear boxes in food industry<br>for anti-friction and sleeve bearings at high temperatures, in ovens, ventilators, engines<br>for bearings in refrigeration equipment<br>for chains in food industry, for packing and filling machines<br>for bearings at funnels and we |
| 1.3 Producer / Distributor: | MOLYDUVAL GmbH * Halskestr.6 * D-40880 Ratingen * H.Wunsch |
| 1.4 Emergency Phone | +49 (2102) 9757-00 |

### 2. Hazards Identification

| | |
|---|---|
| 2.1 Classification | No health hazards known. Product may be used fro lubrication of food processing equipment. |
| 2.2 Information pertaining to particular dangers for man | Is improbable, that the product leads to eye irritations, to a provoking the skin, to an endangerment of the respiratory organs, to a provoking of the lungs or that swallowing leads to effects injurious to health. |
| 2.3 Information pertaining to particular dangers for environment: | Although no environmental damages and bioaccumulations were expected, withdrawing should be avoided into the environment. Into drains to arrive do not leave |

### 3. Composition - Information on Ingredients

| | |
|---|---|
| 3.1 Composition - Information on Ingredients | Mixture from synthetic oils, and thickeners. All components conform to FDA regulation FDA 21 CFR 178.3570 or the german DAB. |

### 4. First Aid Measures

| | |
|---|---|
| 4.1 General Instructions | Remove victim from danger zone, without exposing yourself to any personal risk. Remove wetted clothing and shoes and clean items before using them again. |
| 4.2 After Inhalation | Not applicable. |
| 4.3 After Skin Contact | Wash with soap and much water. |
| 4.4 After Eye Contact | Flush eyes with copious amounts of water for 15 minutes holding lid away from eye. |
| 4.5 After Ingestion | Consult a physician |
| 4.6 Symptoms and effects | no |
| 4.7 Instructions for attending physician | Prolonged or repeated exposure may cause skin discomfort. |

### 5. Fire-Fighting Measures

| | |
|---|---|
| 5.1 Extinguishing media - Usable | Water Spray, Powder, Alcohol Foam, Sand, CO2 |
| 5.2 Extinguishing media - Not usable | Waterjet |
| 5.3 Special personal protection | No |
| 5.4 Further information | Water may cause splattering. |

### 6. Accidental Release Measures

| | |
|---|---|
| 6.1 Special Personal Protection | Use oil-proofed clothing |
| 6.2 Special Environmental Protection | Do not expose to environment or in effluent water. |
| 6.3 Absorbing Materials | Sabbia |
| 6.4 Cleaning Methods | Take up mechanically. |

### 7. Handling and Storage

| | |
|---|---|
| 7.1 Handling | No special steps |
| 7.2 Storage | No special steps |

### 8. Exposure Controls / Personal Protection

| | |
|---|---|
| 8.2 Eye Protection: | None required |
| 8.3 Skin Protection: | None required |
| 8.4 Respiratory Protection: | None required |
| 8.5 Technical Protection | None required |

### 9. Physical and Chemical Properties

| | |
|---|---|
| 9.1 Appearance Form | pasty |
| 9.2 Color | white |
| 9.3 Appearance | like grease |
| 9.4 Odour | like lubrication oil |
| 9.6 Boiling Point / Boiling Range | --°C |
| 9.7 Melting Point / Melting Range | 250°C |
| 9.8 Flash Point | n.b. |
| 9.13 Specific Gravity, 20°C | 0,96 g/cm³ |
| 9.14 Water Solubility | N |
| 9.15 Viscosity, 40°C | 950 mm²/s |

### 10. Stability und Reactivity

| | |
|---|---|
| 10.1 Stability | This product is stable in normal-use temperatures and will not react violently with water |
| 10.2 Conditions to be avoided | No |
| 10.3 Substances to be avoided | No |

### 11. Toxicological Information

| | |
|---|---|
| 11.1 Toxicological Tests | Under current criteria, this material is considered to be non-hazadous (is not to be marked). |
| 11.2 At Eye Contact | No hazard. |
| 11.3 At Skin Contact | No hazard. |
| 11.4 At Inhalation | no data available |
| 11.5 At Ingestion | May cause sickness and vomiting. |

### 12. Ecological Information

| | |
|---|---|
| 12.1 Ecological Information | Product is WGK 2. Don't let into canalisation. |

### 13. Disposal Considerations

| | |
|---|---|
| 13.1 Disposal Considerations | May not be disposed together with domestic rubbish. Disposal in compliance with federal, state, and local laws. EAK Waste Product Code : 130899 Ölabfälle, nicht anders spezifiziert |

### 14. Transport Information

| | |
|---|---|
| 14.1 UN-No | No |
| 14.2 Land Transport ADR/GGVS RID/GGVE | No |
| 14.3 Sea Transport ADNR/IMDG/GGVSee | No |
| 14.4 Air Transport IATA/ICAO | No |
| 14.5 Other | No transport regulations. |

### 15. Regulatory Information

| | |
|---|---|
| 15.1 Limits for Disposal at Places of Employment | No MAK Values defined |
| 15.2 Characterisation symbols | No Precautionary Labels. |

### 16. Further Information

| | |
|---|---|
| 16.1 Further Information | Although the information on this safetysheet is based on the by us known and reliable considdered information, we can neither accept any responsility for the use of it. Please contact us if more infos are needed. |

# MOLYDUVAL
# Soraja FM 372

## Technical Datas

| | | |
|---|---|---|
| Oxidation Resistance | kPa | < 35 |
| Dropping Point | °C | 265 |
| Lubricating Ability 02-SKF-R2F 120°C | | pass |
| Wear Protection VKA Schweißkraft | N | 6000 |
| Wear Protection VKA Verschleißtiefe 40kg/107C/1200U/1h | mm | 0,7 |

*The indicated service temperatures are guide values depending on the lubricants composition and on the application. They may vary in case of special influences or ongoing use.*

For further information, please see our website www.molyduval.com or consult your local representative.

The technical data in this information sheet represents our present knowledge and is based on our general experience. It is intended to give information of possible applications to a reader with technical experience. It constitutes neither an assurance of product properties nor does it release the user from the obligation of performing preliminary tests with the selected product to ensure that the product is safe, effective and fully satisfactory for the intended end use. It does also not form part of any sales contract as guaranteed properties of the delivered material.

The information may be affected by changes occurring subsequent to the date of printing in the blend formulation or methods of application. Updating : 02.09.2009

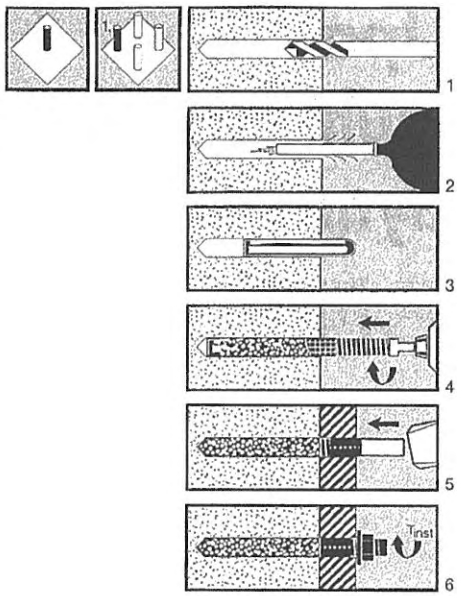


## D Upat UMV multicone dynamic – Montageanleitung

### Einzelbefestigung

1. Mit **Hammerbohrer** Dübelloch bohren.
   Vorgeschriebene Bohrlochdurchmesser und Bohrtiefe beachten.
2. Bohrloch gründlich reinigen. Vom Bohrlochtiefsten her **ausblasen**.
3. Upat multicone **Patrone** prüfen: Die Verwendbarkeit ist gewährleistet, wenn die Patrone unversehrt ist und das Harz honigähnlich fließt. Die Patrone ist in das gesäuberte Bohrloch einzuführen.
4. Upat multicone dynamic **Gewindestahl** auf das **Setzwerkzeug** aufstecken und mit dem **Bohrhammer** bei eingeschaltetem Schlagwerk bis zum Ende der Drahtgewebehülse einvibrieren. Die Maschine ist beim Erreichen der Setztiefe abzuschalten.
   Setzwerkzeug abziehen und die Aushärtezeit des Verbundmörtels vor dem Belasten der Verankerung einhalten (siehe Tabelle). Montagen sind auch bei tieferen Temperaturen möglich.

   Achtung:
   Zu langes Drehen mit der Maschine führt zur fehlerhaften Montage. Ohne Maschine gesetzte Anker, z. B. mit dem Hammer eingeschlagene Gewindestähle, erhalten keinen Verbund und gelten somit als Fehlmontage.

   Achtung:
   Die Vermörtelung muß bis an die Betonoberfläche reichen. Wird kein Mörtel an der Betonoberfläche sichtbar, so ist der Gewindestahl sofort zu ziehen und mit einer zweiten Mörtelpatrone neu zu setzen.

| Temperatur im Verankerungsgrund | Aushärtezeit |
|---|---|
| ± 0 °C | 60 min |
| + 10 °C | 30 min |
| > 20 °C | 25 min |

   Die Wartezeiten gelten für trockenen Verankerungsgrund. Im feuchten Verankerungsgrund sind die Wartezeiten zu verdoppeln.
5. Nach Einhaltung der in der Tabelle angegebenen Aushärtezeiten kann das Anbauteil angebracht werden: **Spannbuchse** auf den Gewindestahl stecken und mit der **Montagehülse** einschlagen. Die Spannbuchse sitzt korrekt, sobald die Montagehülse bündig mit dem Gewindestahl abschließt.
   **Die Buchse darf nicht überstehen!**
6. Montagehülse abziehen. Mutter mit angegebenem Drehmoment anziehen (siehe Tabelle).

## GB Upat UMV multicone dynamic – Installation instructions

### Single installation

1. Use a hammer drill to drill the hole. Observe the specified hole diameter and depth.
2. Thoroughly clean out the drill hole, **blowing** it out from the base.
3. Check the Upat multicone **capsule**. Proper function is guaranteed if the capsule is intact and the resin has a honey-like viscosity. Insert the capsule into the clean drill hole.
4. Attach the Upat multicone dynamic **anchor** stud onto the **setting tool**. Use the **drill hammer** (impact setting) to vibrate the anchor stud into the drill hole up to the end of the wire-mesh sleeve. Switch the drill hammer off when reaching the appropriate setting depth.
   Pull off the setting tool and observe the curing time of the chemical mortar before loading the anchor (see Table). Anchor installations are also possible at lower temperatures.

   Caution:
   Power-turning the anchor stud for too long results in incorrect installations. Anchors set without drill hammer (e.g. set by hammer blows) are not bonding properly and are deemed to be incorrectly installed.

   Caution:
   The mortaring must reach up to the concrete surface. If no mortar protrudes at the concrete surface, immediately pull out the stud and reset using a second mortar capsule.

| Temperature in the anchor base | Curing time |
|---|---|
| ± 0 °C | 60 min |
| + 10 °C | 30 min |
| > 20 °C | 25 min |

   The curing times apply to dry anchor bases. Double the above curing times in wet or moist anchor bases.
5. At the end of the curing time specified in the Table, attach the building component or fixture. Plug the **clamping chuck** onto the anchor stud and drive in with the **installation sleeve**. The clamping chuck is seated correctly as soon as the installation sleeve lies flush with the stud.
   **Do not allow the chuck to project!**
6. Pull off the installation sleeve and tighten the nut with the specified torque (see Table).

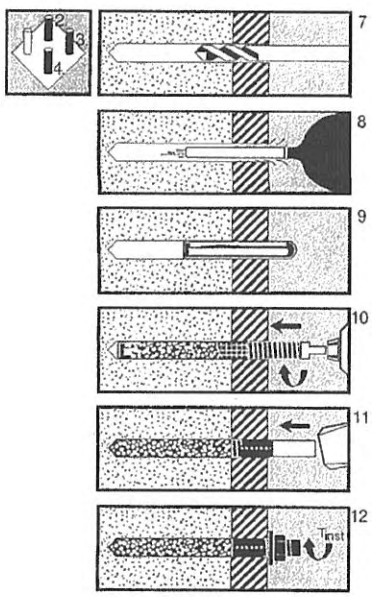


### Mehrfachbefestigungen

Bei Mehrfachbefestigungen wird in der Regel der erste Anker zur Bauteilfixierung in Vorsteckmontage gesetzt. Alle weiteren Anker in Durchsteckmontage! Bei großen Bauteilen, z. B. Ankerplatten für Krane, können alle Anker in Durchsteckmontage gesetzt werden.

**Montage erster Anker:** siehe Einzelbefestigung (Punkt 1 bis 5)

6. Montagehülse abziehen. Anbauteil justieren. Mutter mit angegebenem Drehmoment anziehen (siehe Tabelle).

**Montage der weiteren Anker:**

7. Weitere Dübellöcher durch das Anbauteil bohren. Das Durchgangsloch ($d_f$) im anzuschließenden Bauteil ist zwingend einzuhalten. Es ist darauf zu achten, daß sich die Bohrtiefe um den Betrag der Befestigungsdicke ($h_o+t_{fix}$) vergrößert.
8. Bohrlöcher gründlich reinigen. Vom Bohrlochtiefsten her ausblasen.
9. Patronen in die gesäuberten Bohrlöcher einführen.
10. Upat multicone dynamic Gewindestahl auf das Setzwerkzeug aufstecken und mit dem Bohrhammer bei eingeschaltetem Schlagwerk bis zum Erreichen der Setztiefe einvibrieren. Die Maschine ist beim Erreichen der Setztiefe abzustellen.
11. Setzwerkzeug abziehen und **sofort** die Spannbuchse über den **noch nicht ausgehärteten** Anker mit der Montagehülse einschlagen. Montagehülse abziehen.
    Dieser Vorgang wird so oft wiederholt, bis alle Anker gesetzt sind.

    Achtung:
    Können die Buchsen nicht eingeschlagen werden, so ist das Anbauteil abzunehmen und der überschüssige Mörtel zu entfernen. Anbauteil wieder aufstecken und die Buchsen mit der Montagehülse einschlagen.
12. Nach Einhaltung der angegebenen Aushärtezeiten (siehe Tabelle) kann das Drehmoment bei den restlichen Ankern aufgebracht werden (siehe Tabelle).

**Sicherheitsratschläge:**
R43 Sensibilisierung durch Hautkontakt möglich.
S2 Darf nicht in die Hände von Kindern gelangen.
S3 Kühl aufbewahren (0°C bis +25°C, kurzfristig max. +35°C).
S26 Bei Augenkontakt sofort gründlich mit Wasser spülen. Arzt konsultieren.
S28 Bei Hautkontakt gründlich mit Wasser und Seife abwaschen.
S37/39 Bei der Arbeit geeignete Schutzhandschuhe und Schutzbrille tragen.

### Multiple installation

When setting multiple anchorings, the first anchor is usually set in pre-fixing installation to fix the building component in place, while the remaining anchors are set in through-fixing installation. For large building components (e.g. anchor plates for cranes), all anchors may be set in through-fixing installation.

**Installation of the first anchor:** see Single installation (items 1 to 5 above).

6. Pull off the installation sleeve and align the building component/fixture. Tighten the nut with the specified torque (see Table).

**Installation of subsequent anchors:**

7. Drill the remaining holes through the component/fixture. The clearance hole ($d_f$) in the fixture to be attached must be complied with. Make sure that the drilling depth increases by the same amount as the thickness of the fixture ($h_o+t_{fix}$).
8. Thoroughly clean out the drill holes, blowing them out from the base.
9. Insert the capsules into the clean drill holes.
10. Attach the Upat multicone dynamic anchor stud onto the setting tool. Use the drill hammer (impact setting) to vibrate the stud into the drill hole until reaching the setting depth. Switch the drill hammer off when reaching the appropriate setting depth.
11. Pull off the setting tool and **immediately** use the installation sleeve to drive the clamping chuck over the **as yet uncured** anchor. Pull off the installation sleeve.
    Repeat these steps until all anchors are set.

    Caution:
    If the chucks cannot be driven in, take off the component/fixture and remove excess mortar. Re-attach the component/fixture and drive in the chuck with the installation sleeve.
12. At the end of the curing time (see Table), apply the specified torque to the remaining anchors (see Table).

**Safety notices:**
R43 Potential sensitisation through skin contact
S2 Keep out of reach of children
S3 Store in a cool place (0°C to +25°C, short-term storage at max. +35°C)
S26 In the event of eye contact, immediately rinse in water and consult a doctor.
S28 In the event of skin contact, thoroughly wash off with water and soap.
S37/39 Wear suitable protective gloves and protective goggles.

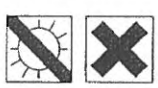

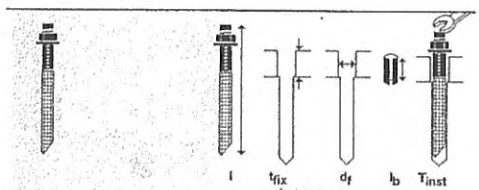


| Typ UMV dyn | No. | mm | mm | ø mm | mm | Nm |
|---|---|---|---|---|---|---|
| **UMV dyn 100 M 12/25** | 8004 | 160 | 15-25 | 16 | 15 | 40 |
| **UMV dyn 100 M 12/50** | 8005 | 185 | 25-50 | 16 | 15 | 40 |
| **UMV dyn 125 M 16/30** | 8006 | 200 | 15-30 | 19 | 15 | 60 |
| **UMV dyn 125 M 16/60** | 8007 | 230 | 30-60 | 19 | 15 | 60 |
| **UMV dyn 170 M 20/40** | 8008 | 255 | 20-40 | 26 | 20 | 100 |
| **UMV dyn 220 M 24/50** | 8009 | 325 | 25-50 | 29 | 25 | 120 |

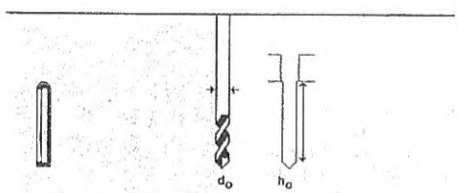


| Typ UMV | No. | ø mm | mm |
|---|---|---|---|
| **UMV 100 M 12 P** | 7947 | 15 | 115 |
| **UMV 100 M 12 P** | 7947 | 15 | 115 |
| **UMV 125 M 16 P** | 7948 | 18 | 140 |
| **UMV 125 M 16 P** | 7948 | 18 | 140 |
| **UMV 170 M 20 P** | 7949 | 25 | 190 |
| **UMV 220 M 24 P** | 7973 | 28 | 245 |

# Material Safety Data Sheet

(according to § 6 GefStoffV and Directive 91/155/EEC)

## Upat multicone Chemical Anchor Capsules

**Article number:** See 1.2

| | | | | | |
|---|---|---|---|---|---|
| **Prepared on:** | 09/06th/2002 | **Reviewed on:** | 05/29th/2006 | **Printing date:** | 29.05.2006 |
| **Version:** | 3.0 | | | **Page:** | 1 of 6 |

## 1. Identification of the substance/preparation and company

| | | | |
|---|---|---|---|
| | **1.1** | **Trade name:** | Upat multicone Chemical Anchor Capsules |
| | **1.2** | **Article number:** | 7945/7946/7947/7948/79/497973 |
| | **1.3** | **Typical application:** | For the anchorage in cracked and uncracked concrete |
| | **1.4** | **Manufacturer/supplier:** | Upat Vertriebs GmbH |
| # | **1.5** | **Address:** | D-79211 Denzlingen, Otto-Hahn-Straße 15 |
| | **1.6** | **Contact:** | Mr. Werner Schäuble |
| | **1.7** | **Telephone:** | 0049 7666/902-2965 |
| | **1.8** | **Telefax:** | 0049 7666/902-2929 |
| | **1.9** | **Emergency information:** | 0049 6132-84463 GBK Gefahrgut Büro GMBH Ingelheim |

## 2. Composition/information on ingredients

**Component A:**

**A.2.1 Chemical characterization:** Formulation of methacrylates

**A.2.2 Dangerous components:**

| CAS – No. | EWG-No. | Index-No. | Material | Content [%] | Symbol | R-Phrases |
|---|---|---|---|---|---|---|
| 27813-02-1 | 248-666-3 | 607-125-00-5 | 2-Hydroxypropylmethacrylate | < 5 | Xi | 36, 43 |

**Component B:**

**B.2.1 Chemical characterization:** Formulation of dibenzoyl peroxide, phlegmatised

**B.2.2 Dangerous components:**

| CAS – No. | EWG-No. | Material | Content [%] | Symbol | R- Phrases |
|---|---|---|---|---|---|
| 94-36-0 | 202-327-6 | Dibenzoyl peroxide | < 5 | E, Xi | 2, 36, 43 |

## 3. Hazards identification

**3.1 Hazard description:**

**A, B** Xi Irritant

**3.2 Information pertaining to particular dangers for man and environment:**

**A, B** R 43 May cause sensitization by skin contact.

## 4. First aid measures

**4.1 General information:** Remove contaminated clothing.

**4.2 After inhalation:** Rest, fresh air.

**4.3 After skin contact:** Rinse thoroughly using water and soap.

**4.4 After eye contact:** Open lid and thoroughly flush for 10 – 15 minutes using clean water. Avoid mechanical irritation by rubbing the eyes. Consult a doctor.

**4.5 After swallowing:** Immediately rinse out the mouth. Consult a doctor.

**4.6 Indications for the doctor:** None.

## 5. Fire-fighting measures

**5.1 Suitable extinguishing media:** Spray water, foam, dry powder extinguisher, carbon dioxide ($CO_2$).

**5.2 For safety reasons unsuitable extinguishing media:** Water applied with full jet.

**5.3 Special exposure hazards arising from the substance or preparation itself, combustion products, resulting gases:** Fire may release carbon monoxide (CO) and carbon dioxide ($CO_2$).

**5.4 Special protective equipment for fire fighting:** Use breathing apparatus with independent air supply.

**5.5 Other information:** None.

## 6. Accidental release measures

**6.1 Person-related safety precautions:** Move all persons out of the hazard area.

**6.2 Measures for environmental protection:** Do not allow to reach open waters, sewers or water pipes.

**6.3 Measures for cleaning/absorption:** Use-liquid-binding material (e.g. sand, dry earth) to soak up. Take up solids by mechanical means. Fill into sealable and labelled containers and dispose as described in chapter 13.

**6.4 Other information:** None.

## 7. Handling and storage

**7.1 Handling:**

**7.1.1 Information for safe handling:** Use only in well ventilated work areas. Avoid direct exposure to sunlight. Maximum temperature (short-term) 35 ºC, minimum temperature 0 ºC.

**7.1.2 Information about protection against explosions and fires:** Keep product away from heat sources, open fires, etc., do not smoke.

**7.2 Storage:**

**7.2.1 Requirements to be met by storerooms and receptables:** Keep capsule in its original package and store in a dry, cool (max. 25 ºC) and well ventilated place.

**7.2.1 Rules for the mixed storage of chemicals:** Do not store together with combustible substances.

**7.2.3 Further information about storage conditions:** Keep dry.

**7.2.4 Storage class:** 10, 11 according to VCI guideline.

## 8. Exposure controls and personal protection

**8.1 Additional information about design of technical systems:**

No further information. See chapter 7.

**8.2 Components with limit values that require monitoring at the workplace:**

| CAS – No. | Material | Content [%] | Type | mg/m³ | Ppm | Fibre/m³ |
|---|---|---|---|---|---|---|
| 14808-60-7 | Quartz | | MAK | 0,15 A | | |
| 94-36-0 | Dibenzoyl peroxide | | MAK | 5 E | | |

**8.3 Additional information: ----**

**8.4 Personal protective equipment:**

**Respiratory protection:** Not required.

| | |
|---|---|
| **Hand protection:** | Wear suitable protective gloves made of nitrile. See EN 374. |
| **Eye protection:** | Tight-fitting safety goggles. See EN 166 F. |
| **Body protection:** | Wear closed working clothes. |
| **General protective and hygienic measures:** | Do not eat, drink or smoke while working. Immediately remove Contaminated clothes. Protect skin with protective skin cream. Avoid contact with skin, eyes and clothes. |

## 9. Physical and chemical properties

**9.1 Appearance:**

| | Component A | Component B |
|---|---|---|
| **Form:** | Liquid in capsule of glass | Capsule of glass, containing powder components |
| **Colour:** | Clear | Like sand |
| **Odour:** | Weak | Odourless |

**9.2 Safety parameters:**

| | Component A | Component B | Method: |
|---|---|---|---|
| **ph - Value at ... g/l $H_2O$; ... °C** | Acid content < 0.5 mg/g KOH | 7 | |
| **Change of state:** | | | |
| **Boiling point/boiling range:** | Polymerization > 114 °C | n.d. | |
| **Melting point/melting range:** | < - 20 °C | Ca. 55°C | |
| **Flash point:** | n.d. | n.a. | |
| **Inflammability:** (Solid): | - | n.d. | |
| **Ignition temperature:** | - | n.d. | |
| **Self igniting:** | > 400 °C | The product is not self igniting | |
| **Oxidizing properties:** | No | No | |
| **Danger of explosion:** | n.d. | No | |
| **Explosion limits:** | | | |
| **LEL:** | n.d. | - | |
| **UEL:** | n.d. | - | |
| **Vapour pressure:** **at 20 °C** | n.d. | n.d. | |
| **Density:** **at 20 °C** | 1.1 - 1.2 g/cm³ | 1.1 g/cm³ | |
| **Solubility:** | | | |
| **Water:** **at 20 °C** | Insoluble | Insoluble | |
| **Organic solvents:** **at 20 °C** | Soluble in most organic solvents | Acetone | |
| **Partition coefficient n-Octanol/Water (log pOW):** | n.d. | n.d. | |
| **Viscosity:** **at 25 °C** | Ca. 500 mPa s | n.a. | |

**9.3 Further information:**

| | | | |
|---|---|---|---|
| **Bulk density** | **at 20 °C** | - | 1.2 - 1.3 g/m³ |

## 10. Stability and reactivity

**10.1 Conditions to be avoided:** Direct exposure to sunlight and temperatures exceeding 35 ºC.

**10.2 Materials to be avoided:** Keep away from reducing substances, acids, alkalies and heavy metal compounds.

**10.3 Hazardous decomposition products:** None, if used as specified.

**10.4 Further information:** None.

## 11. Toxicological information

**11.1 Acute toxicity:** LD50/LC50 values which are relevant for classification: The product has not been tested.

**11.2 Specific symptoms in animal studies:** The product has not been tested.

**11.3 Irritant effects:** The product has not been tested.

**11.4 Sensitization:** May cause sensitization by skin contact.

**11.5 Effects after repeated or longtime Exposition:** ---

**11.6 Carcinogenic, mutagenic, teratogenic or dangerous effects on fertility:** ---

**11.7 Further toxicological information:** ---

## 12. Ecological information

**12.1 Information on elimination:** (Persistence and degradability)
Component A, liquids: Biologically not easy degradable.
Component B: In water stable. Can be removed from the water mechanically.

**12.2 Behaviour in environmental compartiments:** The product has not been tested.

**12.3 Ecotoxicological effects:** The product has not been tested.

**12.4 Further ecological information:** Water hazard class: 1

## 13. Disposal consideration

**13.1 <u>Product:</u>**

**13.1.1 Recommendation:** Waste material requiring special supervision, to be disposed in compliance with official local regulations (e.g. suitable incineration plant).

**13.1.2 European waste code:** 07 02 08, other still bottoms and reaction residues

**13.2 <u>Contaminated packaging:</u>**

**13.2.1 Recommendation:** ---

**13.2.2 Recommended cleaning agent:** ---

**13.2.3 European waste code:** 15 01 10; packaging containing residues of or contaminated by dangerous substances

## 14. Transport information

**14.1 Land transport ADR/RID/GGVS/GGVE:** The product is not considered as dangerous good.

**14.2 Inland navigation ADN/ADNR:** The product is not considered as dangerous good.

**14.3 Transport by sea IMDG/GGVSea:** The product is not considered as dangerous good.

**14.4 Air transport ICAO/IATA:** The product is not considered as dangerous good.

**14.5 Transport /further information** Please contact Mr. Elmar Müller; telephone: ++49 7443/12 - 4896
mobile: ++49 151 -18504887

## 15. Regulations

**15.1 Labelling according to EC Directives/Gefahrstoffverordnung:**

Labelling is based on GefStoffV and directive 1999/45/EG.

**Component A:**

**15.1.1 Symbol(s) and indication(s) of danger:**

**Irritant**

**15.1.2 Hazard-determing component(s) for labelling:**

**Contains:** 2-Hydroxypropylmethacrylate

**15.1.3 R-Phrases:**

R 43 May cause sensitization by skin contact.

**15.1.4 S-Phrases:**

S 2 Keep out of the reach of children.
S 36/37/39 Wear suitable protective clothing, gloves and eye/face protection.

**Component B:**

**15.1.1 Symbol(s) and indication(s) of danger:**

**Irritant**

**15.1.2 Hazard-determing component(s) for labelling:**

**Contains:** Dibenzoyl peroxide

**15.1.3 R-Phrases:**

R 43 May cause sensitization by skin contact.

**15.1.4 S-Phrases:**

| | |
|---|---|
| S 2 | Keep out of the reach of children. |
| S 3/7 | Keep container tightly closed in a cool place. |
| S 14 | Keep away from dirt, rust, chemicals, in particular from concentrated alkalies and acids as well as from activators (e.g. heavy metal salts and amines). |
| S 36/37/39 | Wear suitable protective clothing, gloves and eye/face protection. |

**15.1.5 Special designations for certain preparations:**

**15.2 National regulations (Germany):**

**15.2.1 Indications for employment control:** Gesetz zum Schutze der arbeitenden Jugend (Jugendarbeitsschutzgesetz - JArbSchG)

**15.2.2 Regulations for incidents:**

**15.2.3 Giscode:** n.s.

**15.2.4 Technical instructions (Air):**

**15.2.5 Water hazard class:** 1

**15.2.6 Further regulations:**

**15.2.7 Limitations and prohibition regulations:**

## 16. Other information

**16.1 Further information:**
The above information describes exclusively the safety requirements of the product(s) and is based on our present knowlegde. It does not represent a guarantee for the properties of the product(s) described in terms of the legal warranty regulations. Properties of the product are to be found in the repective product leaflet. This data sheet has been created on basis of the information given by the departments, which are responsible for this product.

**16.2 Department issuing MSDS:** Department T-C (Environment and Safety)
fischer Group of companies, location Denzlingen

**16.3 Contact:** Mr. Werner Schäuble; see chapter 1

**16.4 Full text of the R-Phrases in chapter 2:**
R 2 Risk of explosion by shock, friction, fire or other sources of ignition.
R 36 Irritating to eyes.
R 43 May cause sensitisation by skin contact.

**16.5 Alterations have been made in chapter: 1**

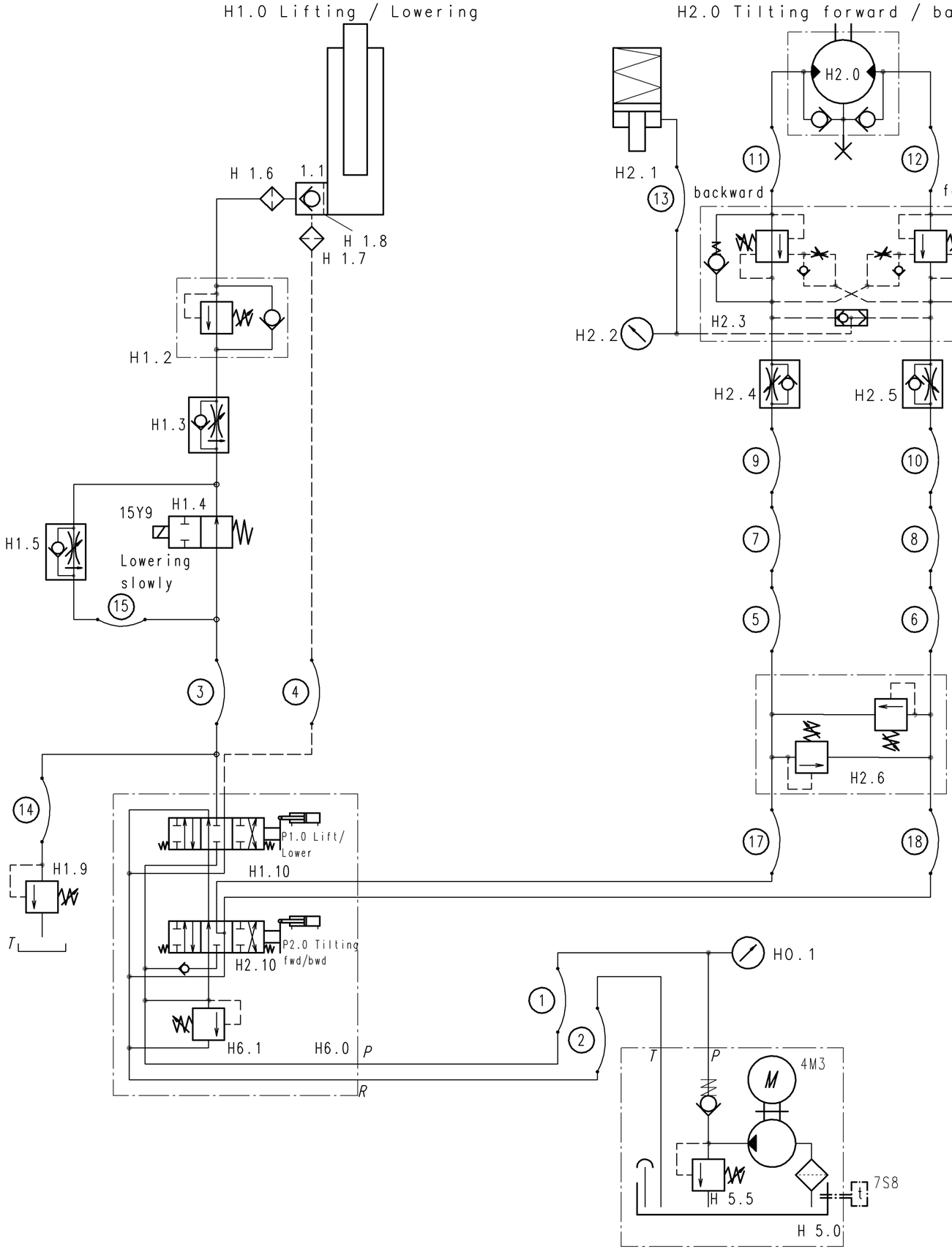


| | | | | | | | | | |
|---|---|---|---|---|---|---|---|---|---|
| Projekt-Nr. | | | | Maße ohne Toleranzangaben ISO 2768 | | Oberflächenreihe R 2 DIN ISO 1302 | Maßstab 1:1 | Art.-Nr. - | |
| | | | | | | | Werkstoff, Halbzeug | | |
| | | | | | Datum | Name | Benennung | | |
| | | | | Erst. | 09.06.11 | Schanz | Hydraulic Schematic | | |
| | | | | Änder. | | | | | |
| | | | | Bearb. | 30.08.11 | Labude | | | |
| | | | | Gepr. | 30.08.11 | Labude | | | |
| | | | | SERVO LIFT GmbH Handhabungstechnik Albert-Einstein-Str.9 D-77656 Offenburg-Zunsweier Tel.0781/6100-0 | | | Zeichnungsnummer U:97\973321\SCA5ACYZ.ZEI | Index | Blatt |
| | | | | | | | 12552-61-001 | 0 | 1/1 |
| Zust. | Änderung | Datum | Name | | | | Ersatz für: | Ersatz durch: | |

ClibPDF - www.fastio.com

P 1.0
(Hydraulic Valve 1.10)
Lifting / Lowering

P 2.0
(Hydraulic Valve 2.10)
Invert fwd / bwd

Air supply
from cabinet
to support arm

HEIGHT STOP

HEIGHT STOP

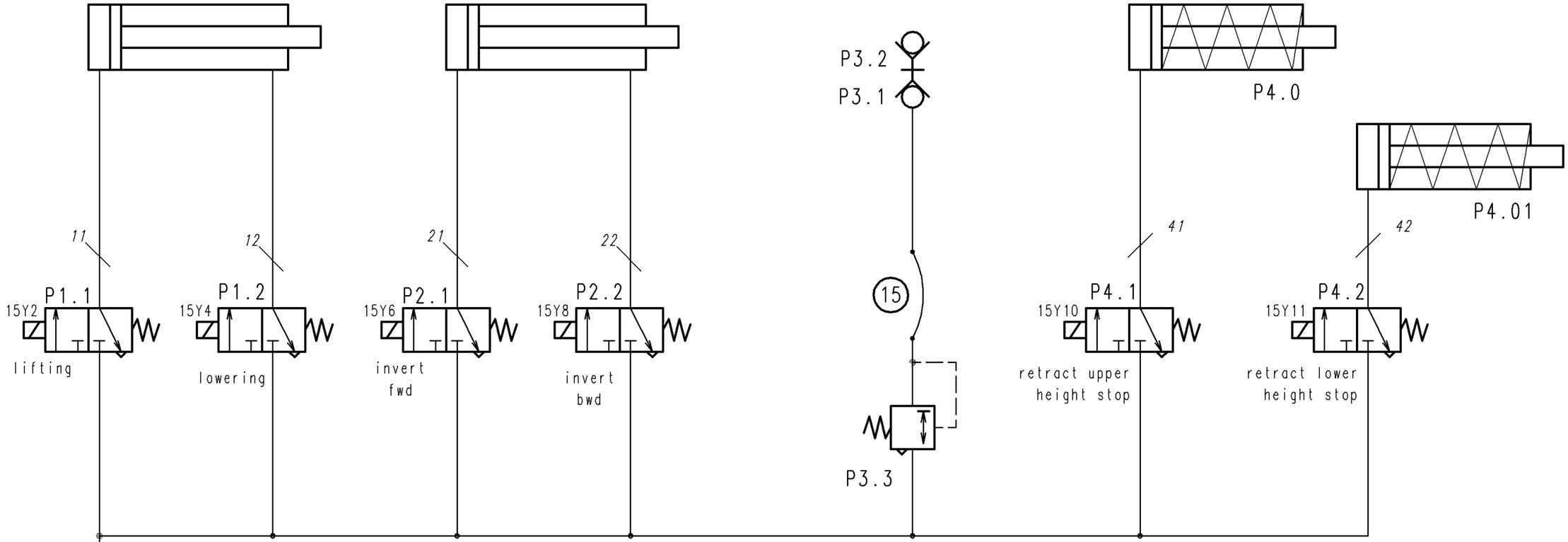


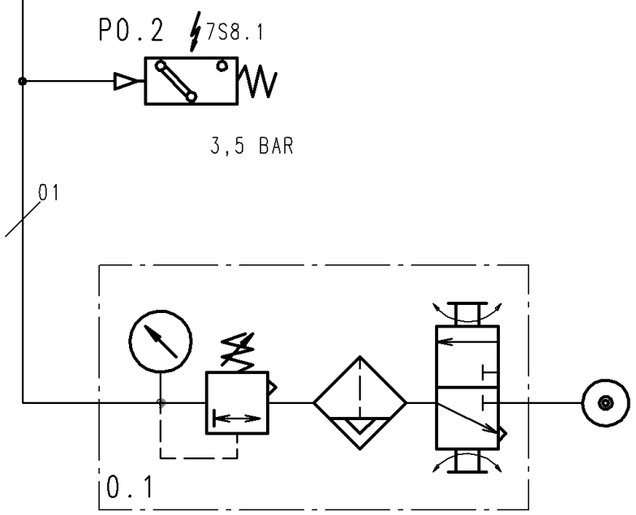


| | | | | | | | |
|---|---|---|---|---|---|---|---|
| Projekt-Nr. | | | | Maße ohne Toleranzangaben: ISO 2768 | Oberflächenreihe: R 2 DIN ISO 1302 | Maßstab 1:1 | Art.-Nr. - |
| | | | | | | Werkstoff, Halbzeug | |
| | | | | | Datum / Name | Benennung | |
| | | | | Erst. | 09.06.11 Schanz | Pneumatic Schematic | |
| | | | | Änder. | | | |
| | | | | Bearb. | 30.08.11 Labude | | |
| | | | | Gepr. | 30.08.11 Labude | | |
| Zust. | Änderung | Datum | Name | SERVO LIFT GmbH<br>Handhabungstechnik<br>Albert-Einstein-Str.9<br>D-77656 Offenburg-Zunsweier<br>Tel.0781/6100-0 | | Zeichnungsnummer U:94\940867\SC2A2731.ZEI: 12552-62-001 | Index: 0 / Blatt: 1/1 |
| | | | | | | Ersatz für: | Ersatz durch: |

ClibPDF - www.fastio.com

SERVOLIFT
Albert-Einstein-Str. 9
D-77656 Offenburg
Tel.: +49 (0) 781 6100-0

# 12552

| | |
|---|---|
| Customer | : Frewitt Fabrique |
| Plant designation | : LIFTING COLUMN |

| | |
|---|---|
| Power supply | : 230/400V 50Hz |
| Input lead | : 5x2,5mm² |
| Power | : 2,5 KW |
| Fuse | : 16 A |
| Control Voltage | : 24 V |
| Manufacturing date | : 2011 |
| Ex - rating | : ZONE 22 |

| | |
|---|---|
| Designed / checked | : 03.03.2010 |
| Creator | : HARMS |
| Last Modification | : 29.08.2011 |
| Last modification by | : harms |
| Ver. | : 3 |
| CAD - Ver. | : 2.0.9 |



SERVOLIFT
Albert-Einstein-Str.9
77656 Offenburg
Phone +49 (0) 781-6100-0
Email: sl@servolift.de

| | | | | | | | |
|---|---|---|---|---|---|---|---|
| designed/checked | | change | | project: | LIFTING COLUMN | description | Frewitt Fabrique |
| date | 03.03.2010 | date | 29.08.2011 | | | FRONT PAGE | |
| user | HARMS | user | harms | project no.: | 12552 | | Granges-Paccot |
| | | ver.: | 3 | | | | |

= MC
+
page 1
of 2

# TABLE OF CONTENTS


| PAGE | PAGE DESCRIPTION | SUPPLEMENTARY PAGE FIELD | DATE | USER |
|---|---|---|---|---|
| =MC/1 | FRONT PAGE | | 15.07.2011 | harms |
| =MC/2 | TABLE OF CONTENTS : =MC/1 - =MC+EP/107 | | 19.07.2011 | harms |
| =MC+DOK/1 | MODIFICATION INDEX | | 15.07.2011 | harms |
| =MC+DOK/2 | DESIGN DESCRIPTION | | 18.07.2011 | harms |
| =MC+DOK/3 | GENERAL ARRANGEMENT | | 18.07.2011 | harms |
| =MC+DOK/3.a | GENERAL ARRANGEMENT | | 15.07.2011 | harms |
| =MC+DOK/4 | CABLE OVERVIEW | | 19.07.2011 | harms |
| =MC+DOK/6 | CABLE OVERVIEW | | 19.07.2011 | harms |
| =MC+DOK/7 | ELECTRIC CABINET | | 18.07.2011 | harms |
| =MC+DOK/8 | MOUNTING PANEL | | 19.07.2011 | harms |
| =MC+DOK/9 | | | 18.07.2011 | harms |
| =MC+EP/1 | SUPPLY | | 19.07.2011 | harms |
| =MC+EP/2 | EINSPEISUNG 24V | | 19.07.2011 | harms |
| =MC+EP/3 | POWER SUPPLY FREWITT | | 19.07.2011 | harms |
| =MC+EP/4 | MOTOR HYDRAULIC PUMP | | 19.07.2011 | harms |
| =MC+EP/7 | E-STOP MODULE | | 19.07.2011 | harms |
| =MC+EP/10 | CIRCUIT DIAGRAM INPUTS | | 19.07.2011 | harms |
| =MC+EP/11 | STROMLAUFPLAN SICHERHEITSABFRAGE | | 19.07.2011 | harms |
| =MC+EP/15 | CIRCUIT DIAGRAM VALVES | | 19.07.2011 | harms |
| =MC+EP/20 | CIRCUIT DIAGRAM | | 19.07.2011 | harms |
| =MC+EP/22 | CIRCUIT DIAGRAM | | 19.07.2011 | harms |
| =MC+EP/100 | OVERVIEW SPARE TERMINALS | | 19.07.2011 | harms |
| =MC+EP/101 | X10 | | 19.07.2011 | harms |
| =MC+EP/102 | X11 | | 19.07.2011 | harms |
| =MC+EP/103 | X12 | | 19.07.2011 | harms |
| =MC+EP/104 | X13 | | 19.07.2011 | harms |
| =MC+EP/105 | X14 | | 19.07.2011 | harms |
| =MC+EP/106 | X15 | | 19.07.2011 | harms |
| =MC+EP/107 | X31 | | 19.07.2011 | harms |
| | | | | |
| | | | | |
| | | | | |
| | | | | |





SERVOLIFT
Albert-Einstein-Str.9
77656 Offenburg
Phone +49 (0) 781-6100-0
Email: sl@servolift.de


| designed/checked | | change | |
|---|---|---|---|
| date | 03.03.2010 | date | 29.08.2011 |
| user | HARMS | user | harms |
| | | ver.: | 3 |

project: LIFTING COLUMN

project no.: 12552

description: TABLE OF CONTENTS : =MC/1 - =MC+EP/107

Frewitt Fabrique

Granges-Paccot

= MC
+

page 2
of 2

| VERSION | DATE | MODIFICATIONS | PAGE | USER |
|---|---|---|---|---|
| 2 | 17.08.2011 | AFTER REVIEW BY CUSTOMER | | HARMS |
| 3 | 29.08.2011 | AS BUILT | | HARMS |

+/2



SERVOLIFT
Albert-Einstein-Str.9
77656 Offenburg
Phone +49 (0) 781-6100-0
Email: sl@servolift.de

designed/checked
date 03.03.2010
user HARMS

change
date 29.08.2011
user harms
ver.: 3

project: LIFTING COLUMN

project no.: 12552

description
MODIFICATION INDEX

Frewitt Fabrique

Granges-Paccot

= MC
+ DOK

# DESIGN REFERENCE

## WIRING WIDTH

| | |
|---|---|
| MAIN CIRCUIT | : 400V AC - min. 1,5mm² |
| CONTROL CIRCUIT | : 24V DC - min. 0,5mm² |
| CONTROL CIRCUIT | : 230V AC - min. 1,5mm² |

## SPECIFIC REFERENCE

| | |
|---|---|
| CABLE ENTRY | : BELOW |
| CUSTOMER SPECIFICATIONS | : ☐ |
| CONDUCTOR MARKING | : ☒ |
| LANGUAGE | : ENGLISH |

THE INSTALLATION OF THE MACHINE IS ACCORDING TO VDE 0100, VDE 0113

## WIRING COLOURS

| | |
|---|---|
| MAIN CIRCUIT | : BLACK |
| NEUTRAL CONDUCTOR | : LIGHT BLUE |
| PROTECTIVE WIRE | : GREEN-YELLOW |
| CONTROL CIRCUIT 230V AC | : RED |
| GROUND / 230V AC | : RED |
| CONTROL CIRCUIT 24V DC | : BLUE |
| GROUND / 24V DC | : BLUE |
| EXTERNAL VOLTAGE | : ORANGE |
| ANALOGUE SIGNAL | : WHITE |
| PT 100 | : WHITE |
| INTRINSICALLY SAFE (Ex i) | : LIGHT BLUE |

## CUSTOMER SPECIFICATIONS

1 3

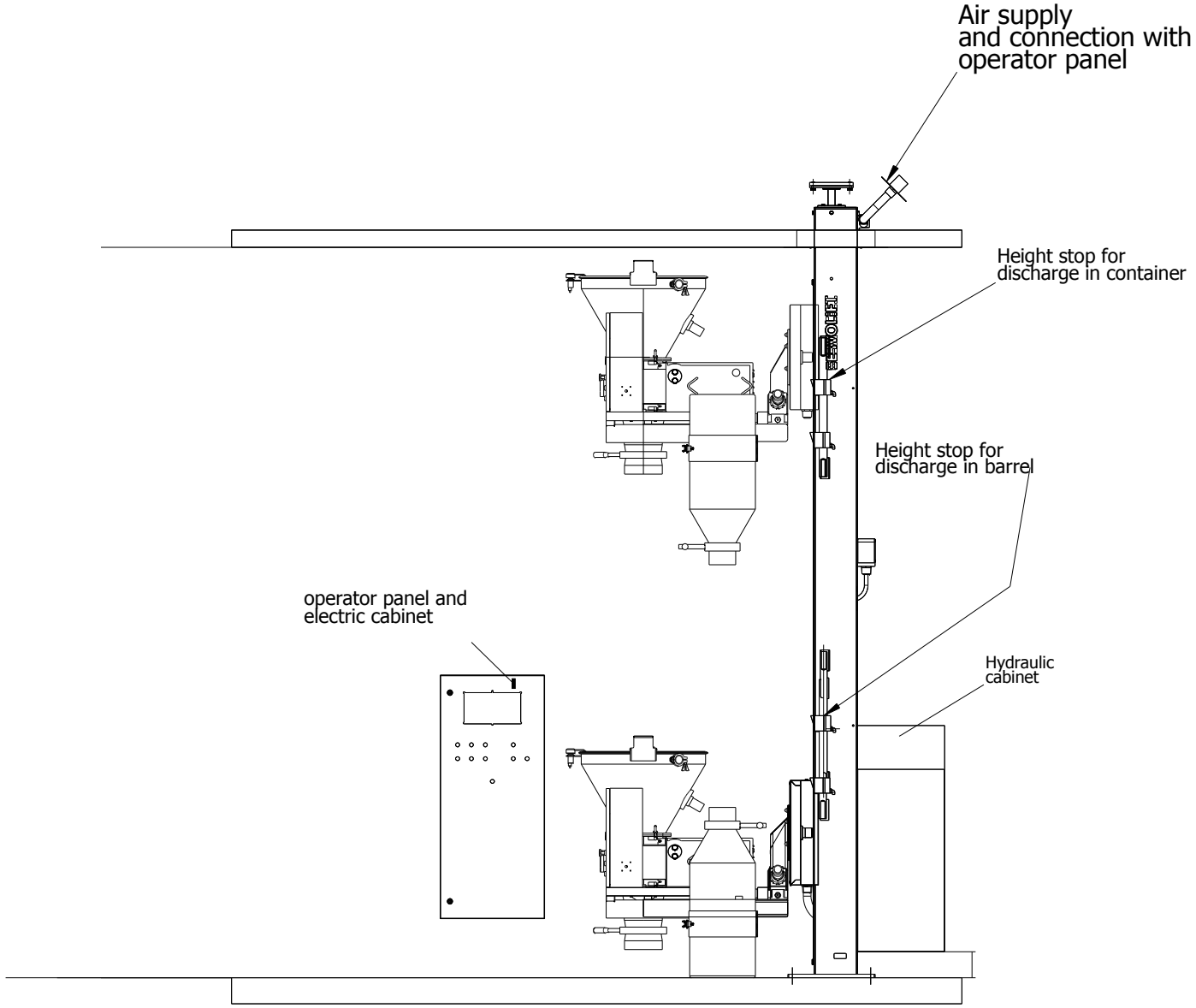


2

3.a

SERVOLIFT
Albert-Einstein-Str.9
77656 Offenburg
Phone +49 (0) 781-6100-0
Email: sl@servolift.de

| | | | | | | | |
|---|---|---|---|---|---|---|---|
| designed/checked | | change | | project: | description | | = MC |
| date | 03.03.2010 | date | 29.08.2011 | LIFTING COLUMN | GENERAL ARRANGEMENT | Frewitt Fabrique | + DOK |
| user | HARMS | user | harms | | | | page 3 |
| | | ver.: | 3 | project no.: 12552 | | Granges-Paccot | of 9 |

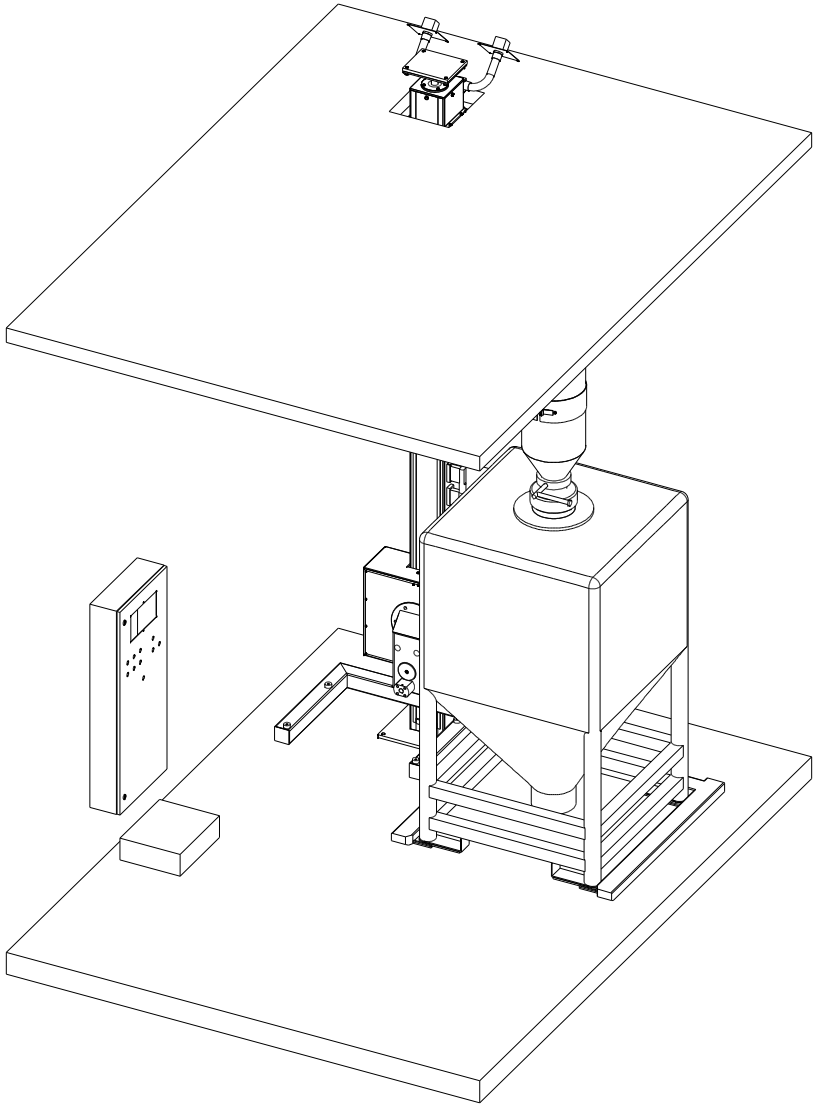

3 4

| | | | | | | |
|---|---|---|---|---|---|---|
| SERVOLIFT<br>Albert-Einstein-Str.9<br>77656 Offenburg<br>Phone +49 (0) 781-6100-0<br>Email: sl@servolift.de | designed/checked<br>date 03.03.2010<br>user HARMS | change<br>date 29.08.2011<br>user harms<br>ver.: 3 | project: LIFTING COLUMN<br>project no.: 12552 | description<br>GENERAL ARRANGEMENT | Frewitt Fabrique<br>Granges-Paccot | = MC<br>+ DOK<br>page 3.a<br>of 9 |

# PLANT OVERVIEW

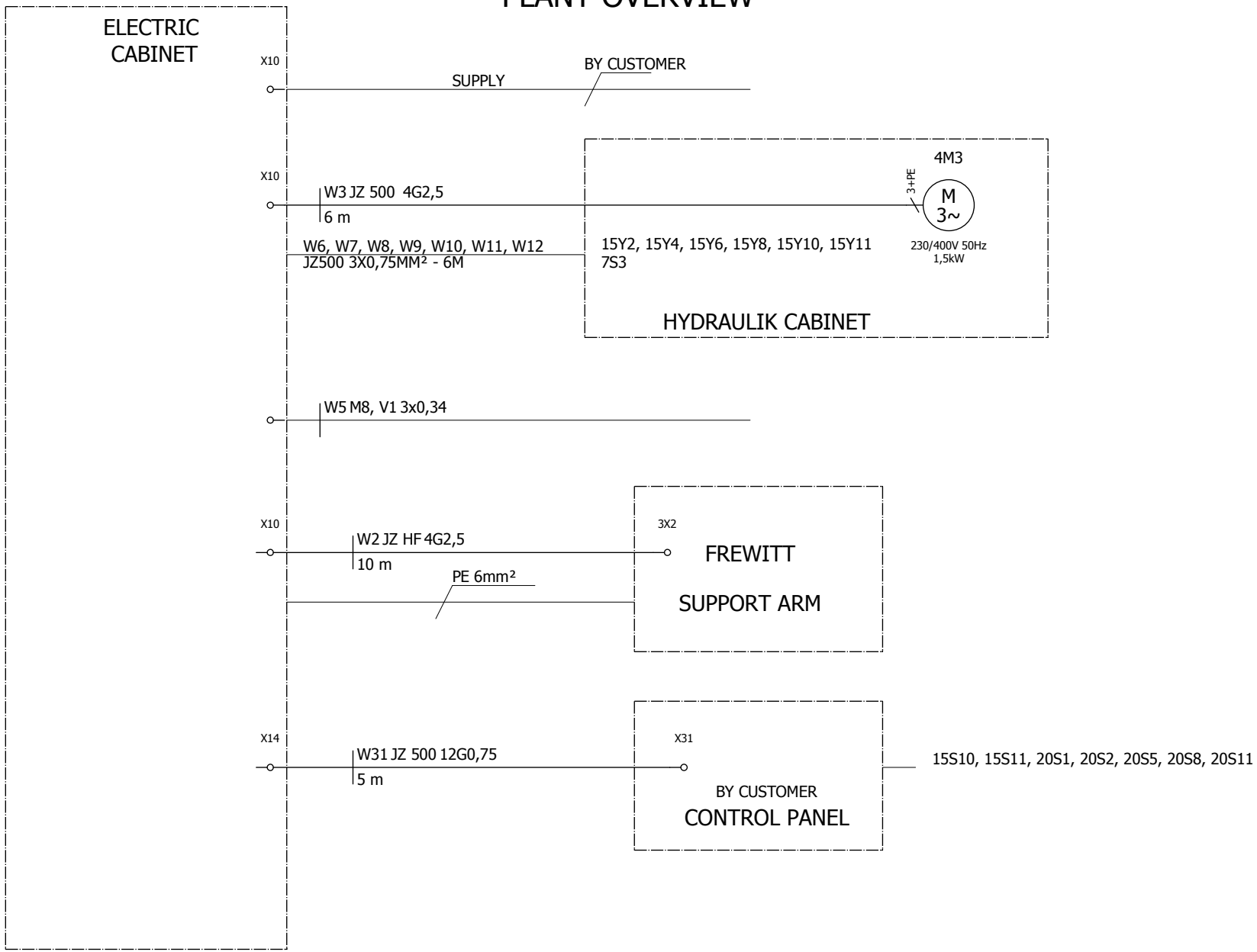




| | | | | | | |
|---|---|---|---|---|---|---|
| SERVOLIFT<br>Albert-Einstein-Str.9<br>77656 Offenburg<br>Phone +49 (0) 781-6100-0<br>Email: sl@servolift.de | designed/checked<br>date 03.03.2010<br>user HARMS | change<br>date 29.08.2011<br>user harms<br>ver.: 3 | project: LIFTING COLUMN<br>project no.: 12552 | description<br>CABLE OVERVIEW | Frewitt Fabrique<br>Granges-Paccot | = MC<br>+ DOK<br>page 4<br>of 9 |

# Cable overview

| Cable designation | Source by | Target to | Cable type | Total Conductors | Cross-section mm² | Remark |
|---|---|---|---|---|---|---|
| W1 | X10 | PE;L1;L2;L3;N | JZ 500 | 5G | 2,5 | SUPPLY |
| W2 | X10 | 3X2 | JZ HF | 4G | 2,5 | |
| W3 | X10 | 4M3 | JZ 500 | 4G | 2,5 | MOTOR HYDRAULIC PUMP |
| W4 | X14 | 7S8 | OZ 500 | 2x | 1 | TEMPERATURE HYDRAULIC OIL >70°C =LOW |
| W5 | X14 | 10B2 | M12, V1 | 4 | 0,34 | |
| W6 | X15 | 15Y2 | JZ-500 | 3 | 0,75 | VALVE: LIFT |
| W7 | X15 | 15Y4 | JZ-500 | 3 | 0,75 | VALVE: LOWER |
| W8 | X15 | 15Y6 | JZ-500 | 3 | 0,75 | VALVE: LIFT |
| W9 | X15 | 15Y8 | JZ-500 | 3 | 0,75 | VALVE: LOWER |
| W10 | X15 | 15Y9 | JZ-500 | 3 | 0,75 | |
| W11 | X15 | 15Y10 | JZ-500 | 3 | 0,75 | |
| W12 | X15 | 15Y11 | JZ-500 | 3 | 0,75 | |
| W13 | X14 | 10B7 | M12, V1 | 4 | 0,34 | |
| W14 | X14 | 10B8 | M12, V1 | 4 | 0,34 | = |
| W31 | X14 | X31 | JZ 500 | 12G | 0,75 | UPPER OPERATOR PANEL |
| W101 | | | JZ HF | 5G | 0,75 | |
| W102 | 11X6 | 11S6 | Sensor | 4 | 0,5 | |



SERVOLIFT
Albert-Einstein-Str.9
77656 Offenburg
Phone +49 (0) 781-6100-0
Email: sl@servolift.de

designed/checked
date 03.03.2010
user HARMS

change
date 29.08.2011
user harms
ver.: 3

project: LIFTING COLUMN

project no.: 12552

description
CABLE OVERVIEW

Frewitt Fabrique

Granges-Paccot

= MC
+ DOK

# ON SITE (SUPPLIED/MADE BY CUSTOMER)

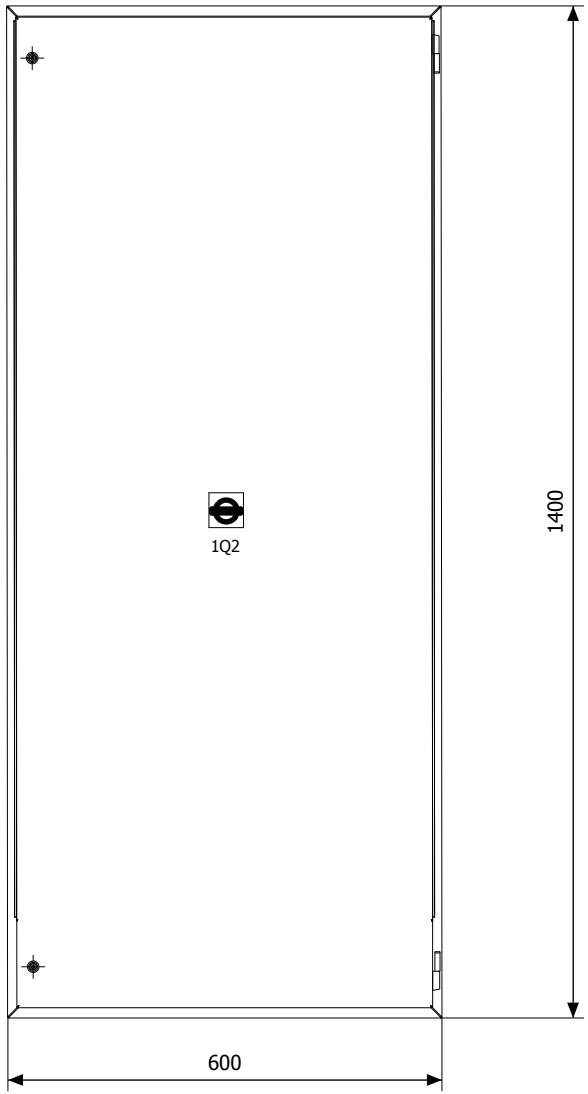


6 8

SERVOLIFT
Albert-Einstein-Str.9
77656 Offenburg
Phone +49 (0) 781-6100-0
Email: sl@servolift.de

| | | | | | | | |
|---|---|---|---|---|---|---|---|
| designed/checked | | change | | project: | description | | = MC |
| date | 03.03.2010 | date | 29.08.2011 | LIFTING COLUMN | ELECTRIC CABINET | Frewitt Fabrique | + DOK |
| user | HARMS | user | harms | | | | page 7 |
| | | ver.: | 3 | project no.: 12552 | | Granges-Paccot | of 9 |

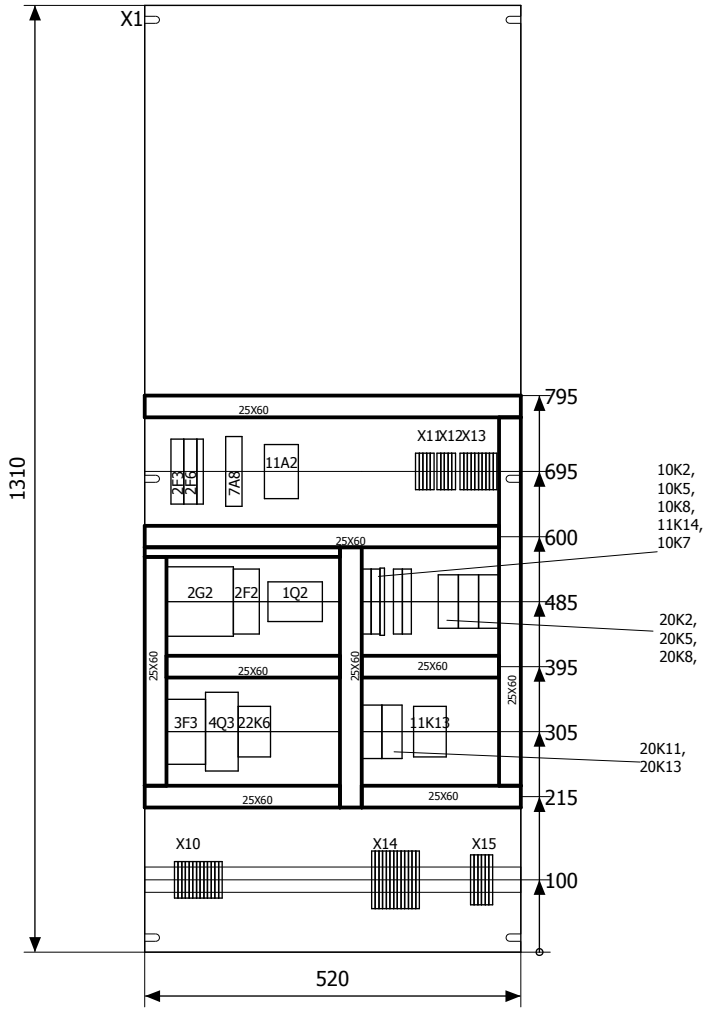




SERVOLIFT
Albert-Einstein-Str.9
77656 Offenburg
Phone +49 (0) 781-6100-0
Email: sl@servolift.de

| | | | | | | |
|---|---|---|---|---|---|---|
| designed/checked | change | project: LIFTING COLUMN | description MOUNTING PANEL | Frewitt Fabrique | = MC | |
| date 03.03.2010 | date 29.08.2011 | | | | + DOK | |
| user harms | user harms | project no.: 12552 | | Granges-Paccot | page 8 | |
| | ver.: | | | | of 9 | |

BEDIENPULT WIRD BEIGESTELLT!

NUR TASTER MITLIEFERN



SERVOLIFT
Albert-Einstein-Str.9
77656 Offenburg
Phone +49 (0) 781-6100-0
Email: sl@servolift.de

| | | | | | |
|---|---|---|---|---|---|
| designed/checked | change | project: LIFTING COLUMN | description | Frewitt Fabrique | = MC |
| date 03.03.2010 | date 29.08.2011 | | | | + DOK |
| user HARMS | user harms | project no.: 12552 | | Granges-Paccot | page 9 |
| | ver.: 3 | | | | of 9 |

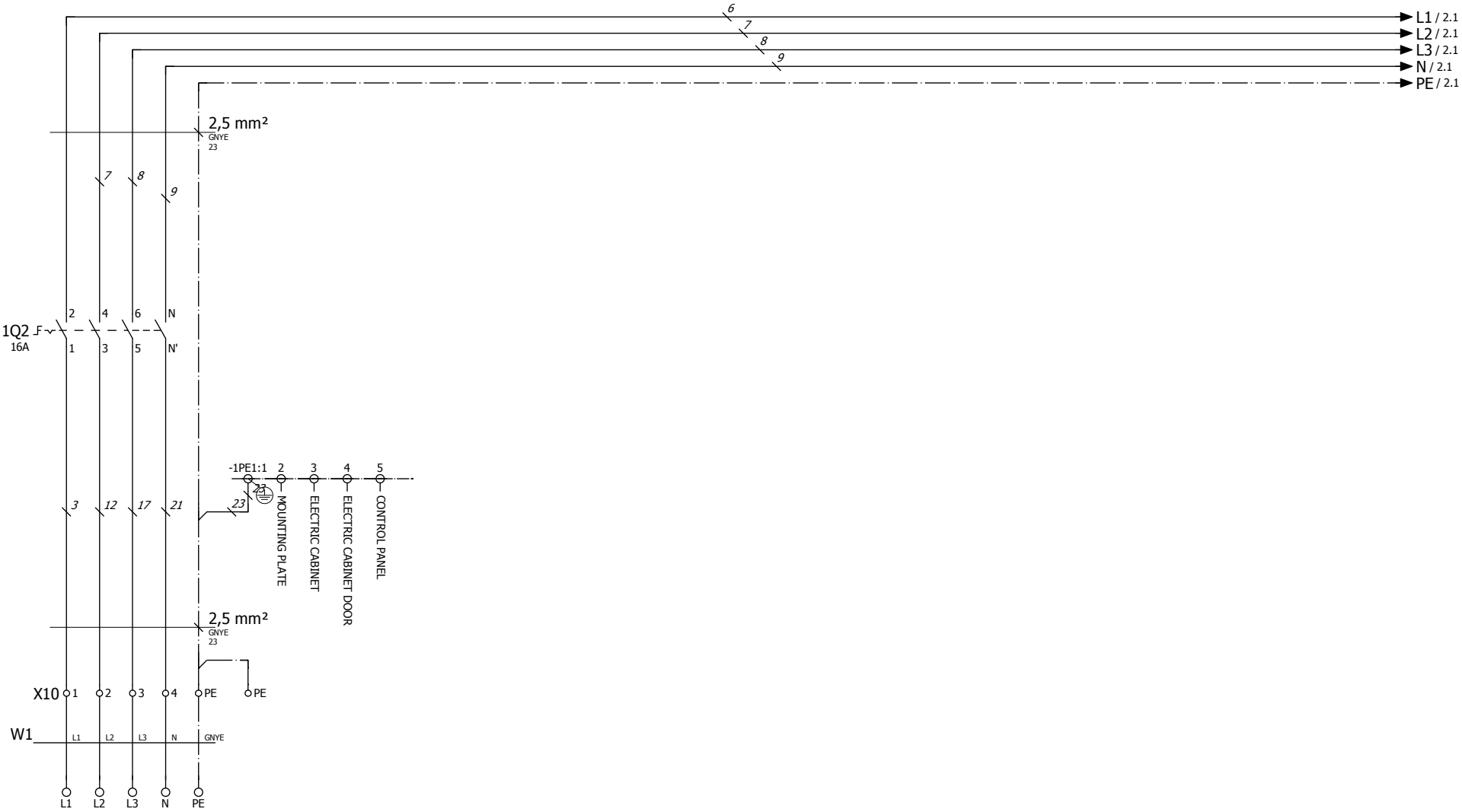


Network supply on site



SERVOLIFT
Albert-Einstein-Str.9
77656 Offenburg
Phone +49 (0) 781-6100-0
Email: sl@servolift.de

| | | | | | | | |
|---|---|---|---|---|---|---|---|
| designed/checked | | change | | project: | LIFTING COLUMN | description | Frewitt Fabrique |
| date | 03.03.2010 | date | 29.08.2011 | | | SUPPLY | |
| user | HARMS | user | harms | project no.: | 12552 | | Granges-Paccot |
| | | ver.: | 3 | | | | |

= MC
+ EP
page 1
of 107

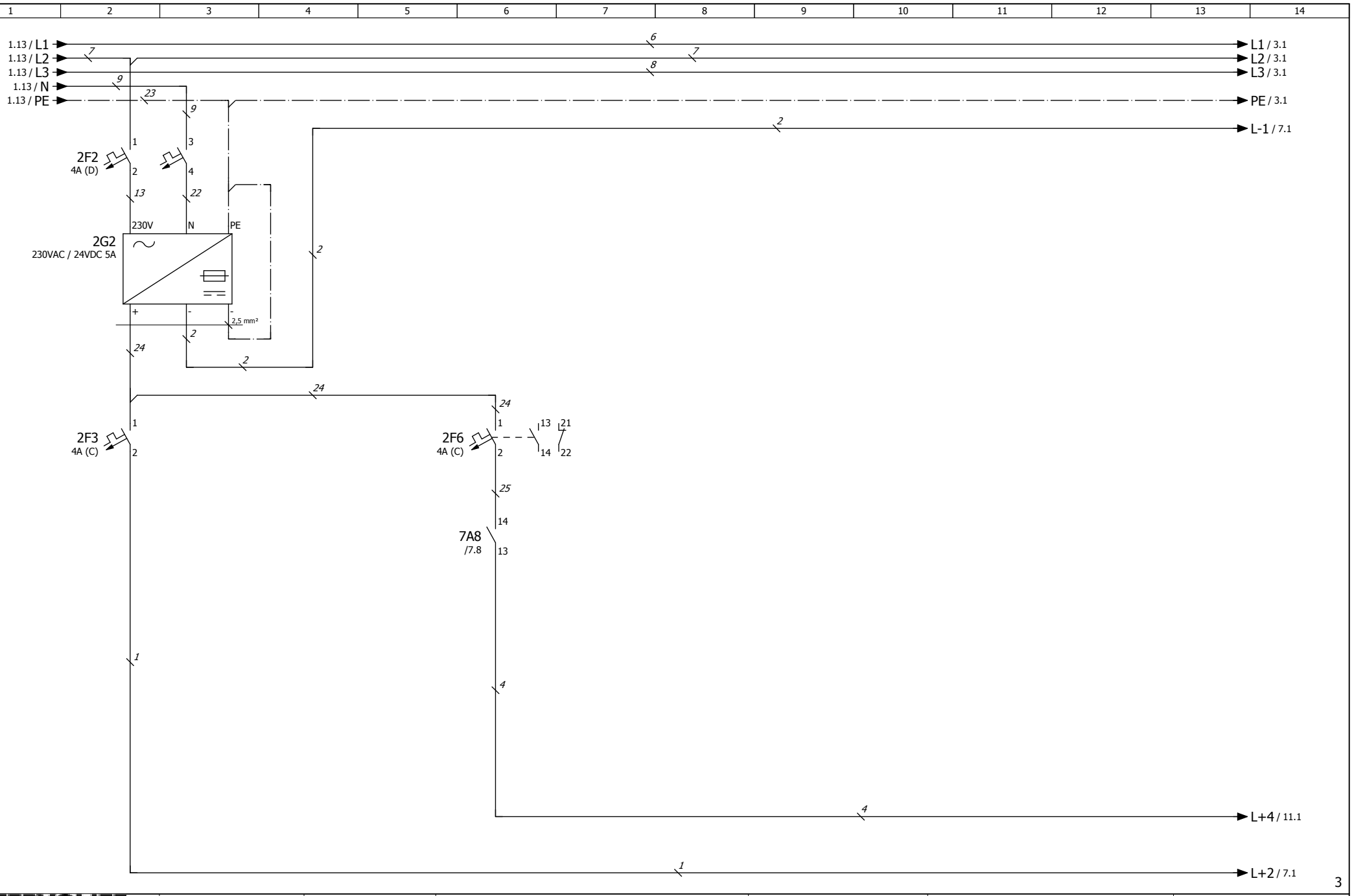


| | | | | | | |
|---|---|---|---|---|---|---|
| SERVOLIFT<br>Albert-Einstein-Str.9<br>77656 Offenburg<br>Phone +49 (0) 781-6100-0<br>Email: sl@servolift.de | designed/checked<br>date 03.03.2010<br>user HARMS | change<br>date 29.08.2011<br>user harms<br>ver.: 3 | project: LIFTING COLUMN<br>project no.: 12552 | description<br>EINSPEISUNG 24V | Frewitt Fabrique<br>Granges-Paccot | = MC<br>+ EP<br>page 2<br>of 107 |

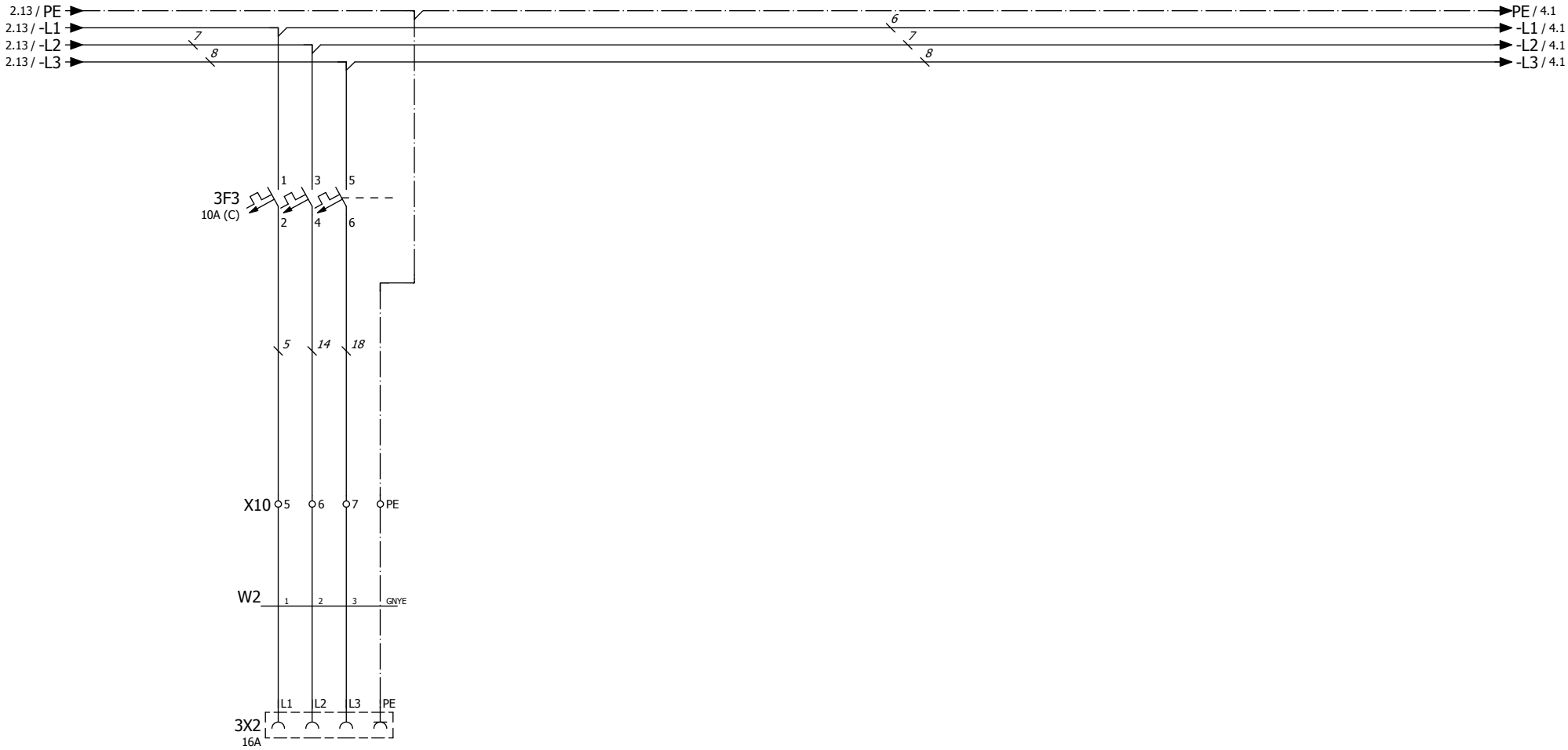


FREWITT



SERVOLIFT
Albert-Einstein-Str.9
77656 Offenburg
Phone +49 (0) 781-6100-0
Email: sl@servolift.de

| | | | | | | | |
|---|---|---|---|---|---|---|---|
| designed/checked | | change | | project: LIFTING COLUMN | description POWER SUPPLY FREWITT | Frewitt Fabrique | = MC |
| date | 03.03.2010 | date | 29.08.2011 | | | | + EP |
| user | HARMS | user | harms | | | | page 3 |
| | | ver.: | 3 | project no.: 12552 | | Granges-Paccot | of 107 |

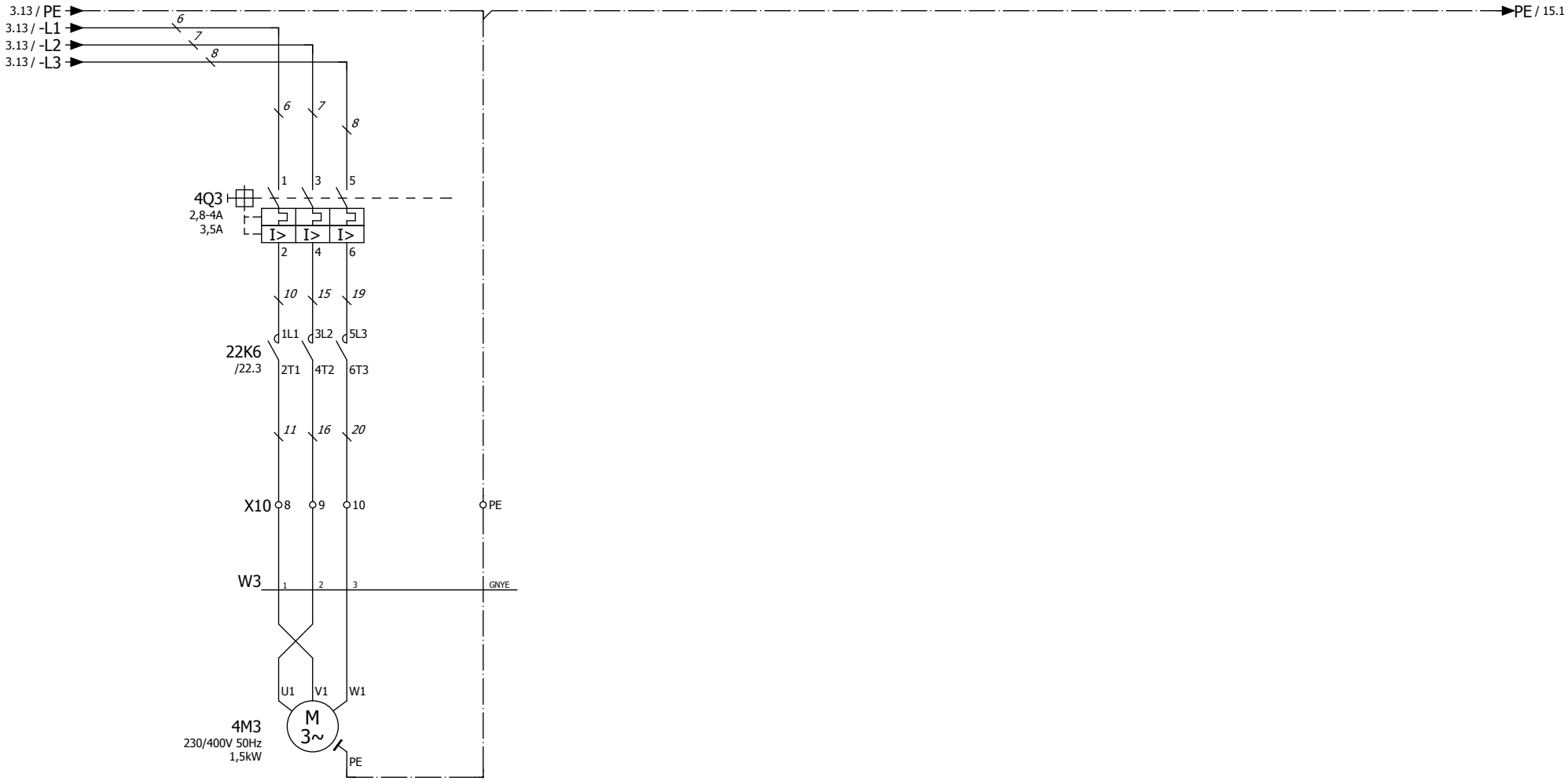


MOTOR
HYDRAULIC
PUMP

3 7

| | | | | | | |
|---|---|---|---|---|---|---|
| SERVOLIFT<br>Albert-Einstein-Str.9<br>77656 Offenburg<br>Phone +49 (0) 781-6100-0<br>Email: sl@servolift.de | designed/checked<br>date 03.03.2010<br>user HARMS | change<br>date 29.08.2011<br>user harms<br>ver.: 3 | project: LIFTING COLUMN<br>project no.: 12552 | description<br>MOTOR HYDRAULIC PUMP | Frewitt Fabrique<br>Granges-Paccot | = MC<br>+ EP<br>page 4<br>of 107 |

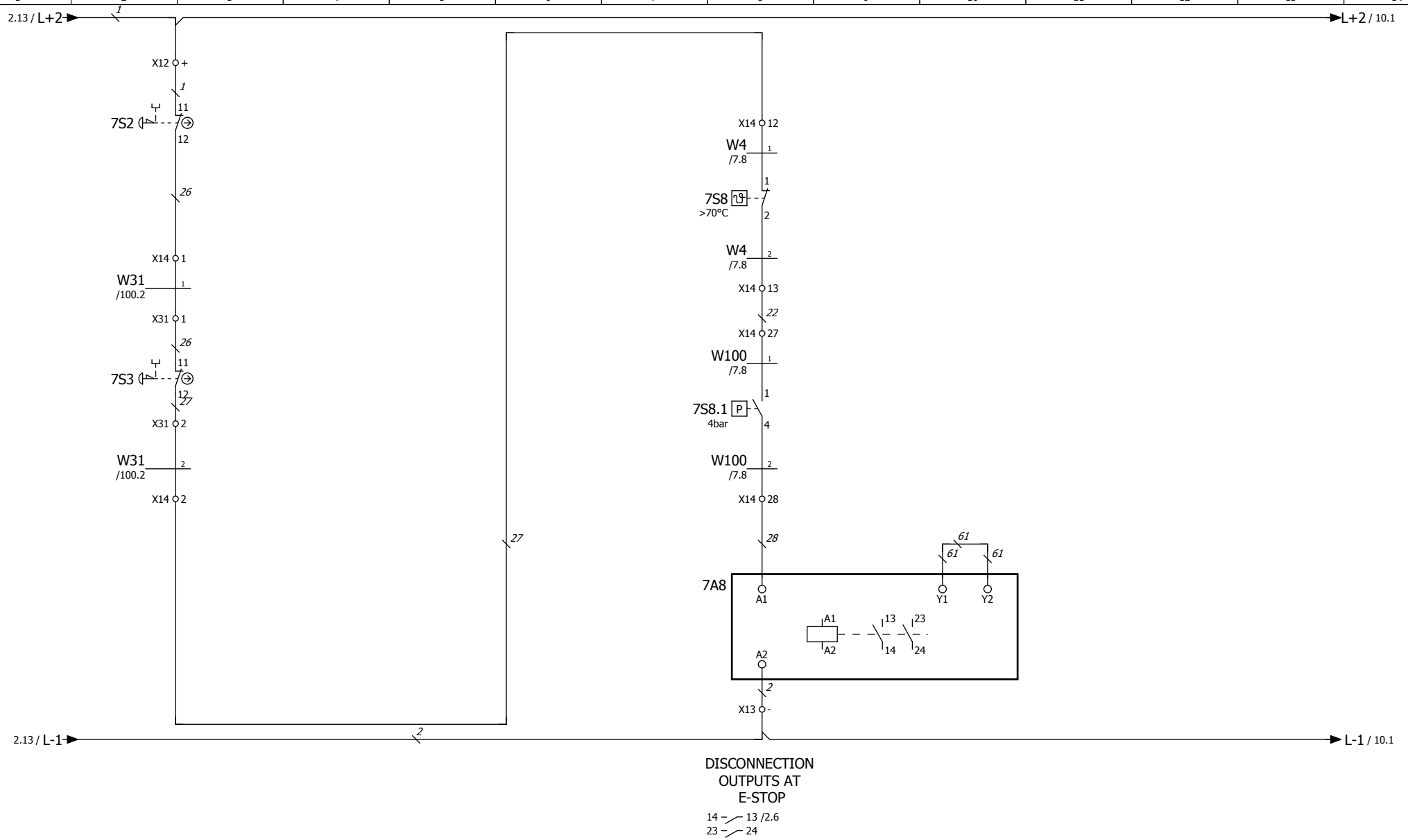


DISCONNECTION
OUTPUTS AT
E-STOP

14 — 13 /2.6
23 — 24



SERVOLIFT
Albert-Einstein-Str.9
77656 Offenburg
Phone +49 (0) 781-6100-0
Email: sl@servolift.de

| | | | | | | |
|---|---|---|---|---|---|---|
| designed/checked | change | project: LIFTING COLUMN | description E-STOP MODULE | Frewitt Fabrique | = MC | |
| date 03.03.2010 | date 29.08.2011 | | | | + EP | |
| user HARMS | user harms | project no.: 12552 | | Granges-Paccot | page 7 | |
| | ver.: 3 | | | | of 107 | |

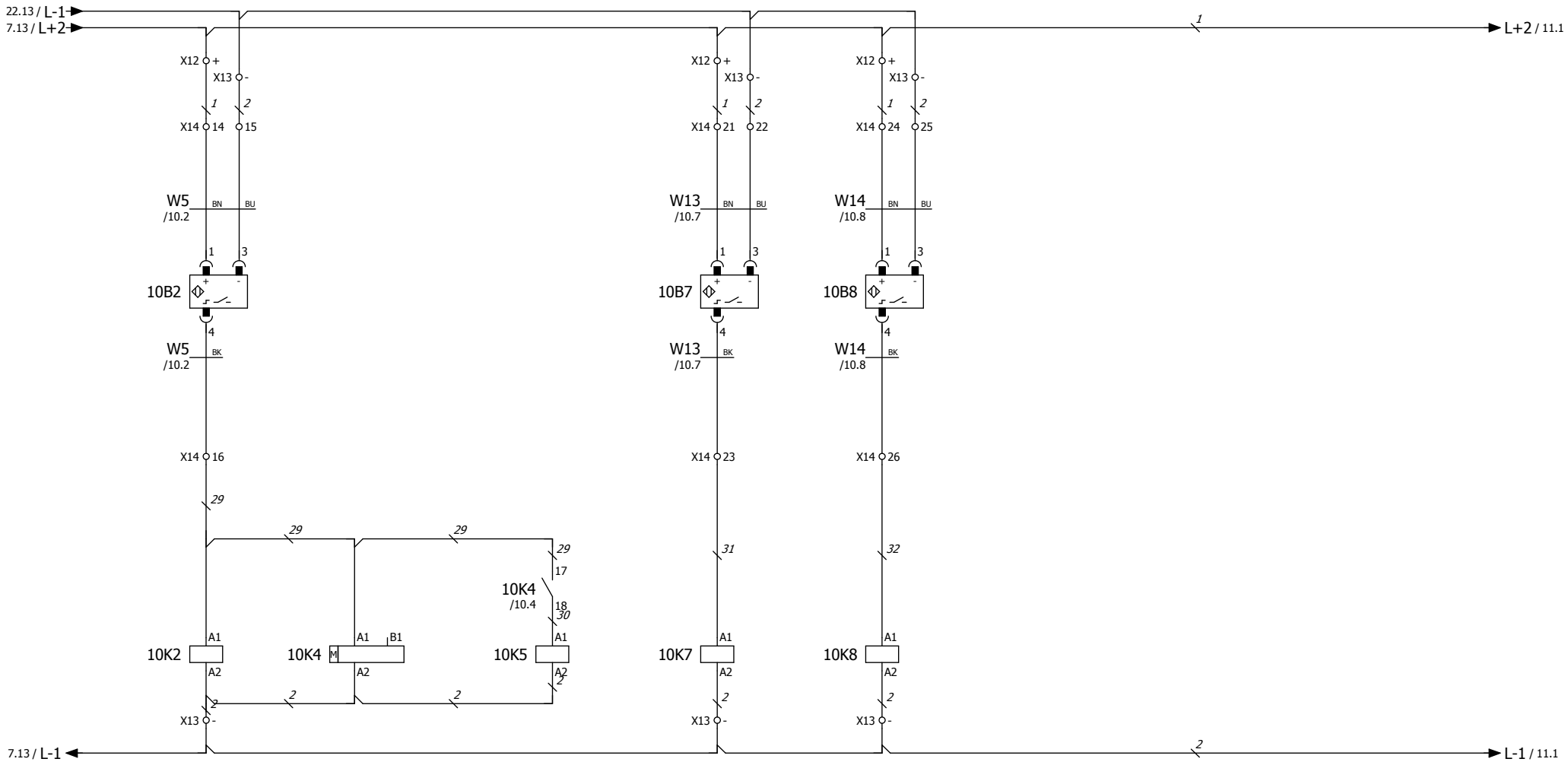


7

11

| | | | | | | | |
|---|---|---|---|---|---|---|---|
| SERVOLIFT<br>Albert-Einstein-Str.9<br>77656 Offenburg<br>Phone +49 (0) 781-6100-0<br>Email: sl@servolift.de | designed/checked<br>date 03.03.2010<br>user HARMS | change<br>date 29.08.2011<br>user harms<br>ver.: 3 | project: LIFTING COLUMN<br>project no.: 12552 | description<br>CIRCUIT DIAGRAM INPUTS | Frewitt Fabrique<br>Granges-Paccot | = MC<br>+ EP | page 10<br>of 107 |

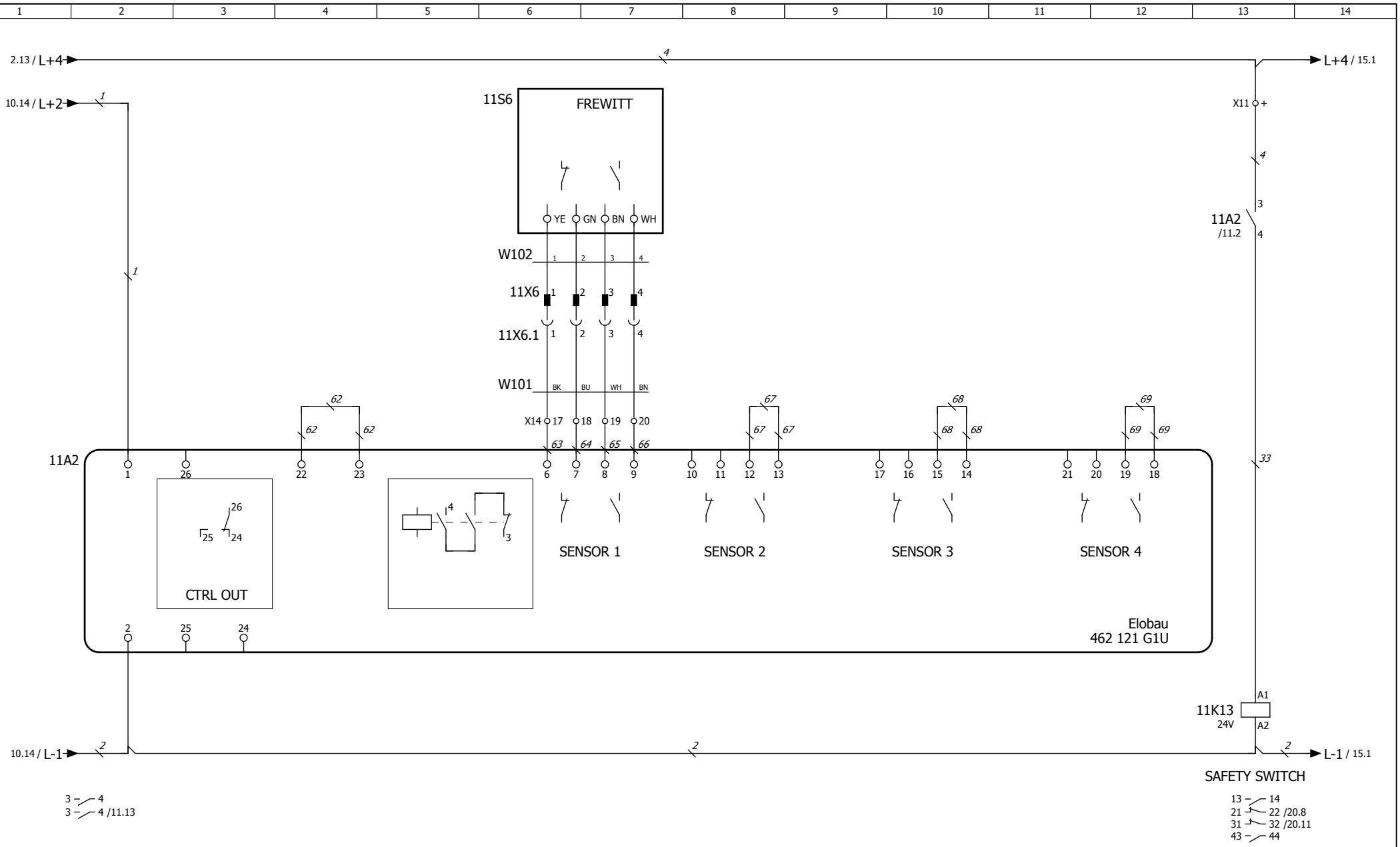


10 15

| | | | | | |
|---|---|---|---|---|---|
| SERVOLIFT<br>Albert-Einstein-Str.9<br>77656 Offenburg<br>Phone +49 (0) 781-6100-0<br>Email: sl@servolift.de | designed/checked<br>date 03.03.2010<br>user HARMS | change<br>date 29.08.2011<br>user harms<br>ver.: 3 | project: LIFTING COLUMN<br>project no.: 12552 | description<br>STROMLAUFPLAN<br>SICHERHEITSABFRAGE | Frewitt Fabrique<br>Granges-Paccot | = MC<br>+ EP<br>page 11<br>of 107 |

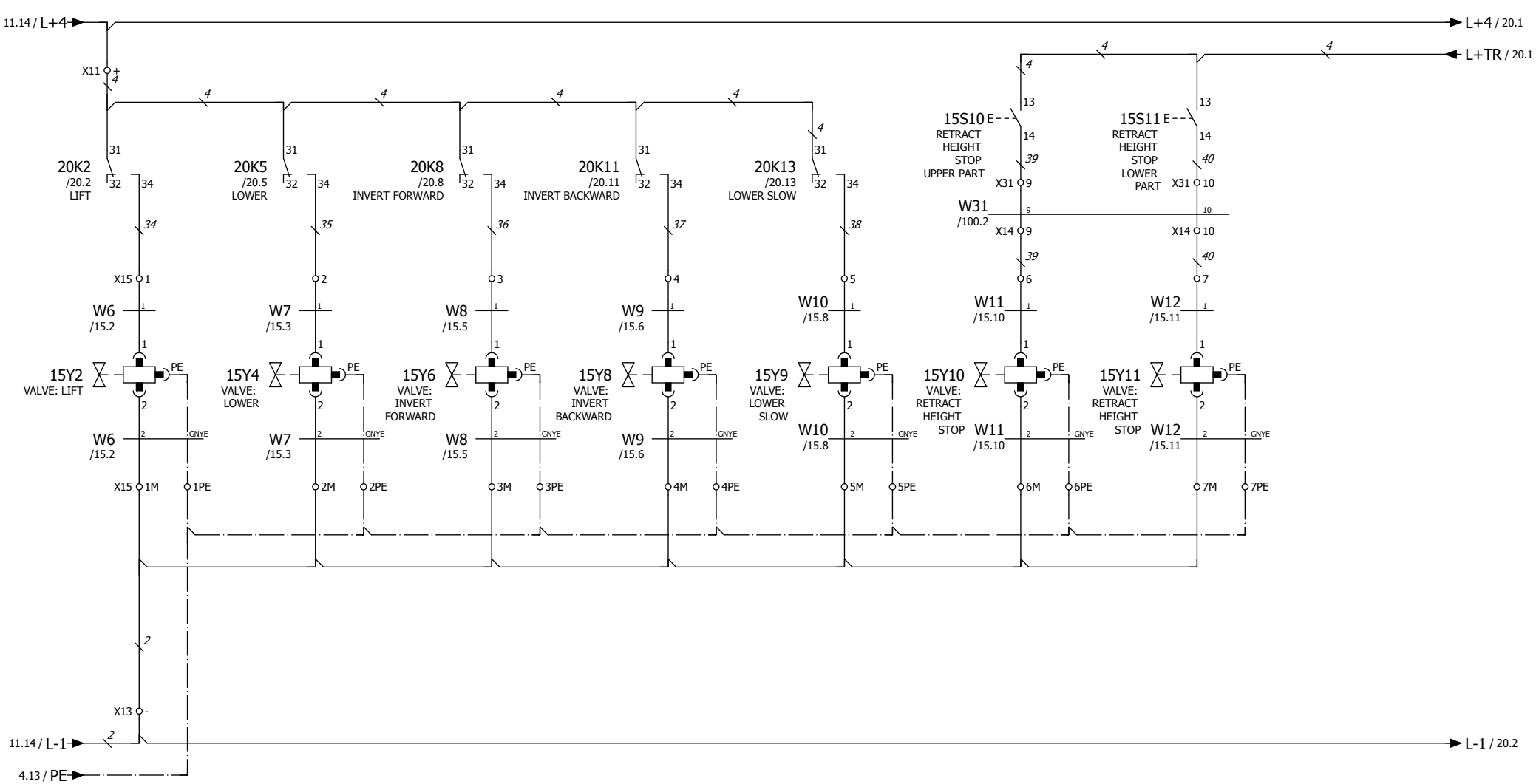


| VALVE: LIFT | VALVE: LOWER | VALVE: INVERT FORWARD | VALVE: INVERT BACKWARD | VALVE: LOWER SLOW | RETRACT HEIGHT STOP UPPER PART | RETRACT HEIGHT STOP LOWER PART |
|---|---|---|---|---|---|---|
| P1.1 | P1.2 | P2.1 | P2.2 | H1.4 | P4.1 | P4.2 |



SERVOLIFT
Albert-Einstein-Str.9
77656 Offenburg
Phone +49 (0) 781-6100-0
Email: sl@servolift.de

| designed/checked | | change | | project: | LIFTING COLUMN | description | CIRCUIT DIAGRAM VALVES | Frewitt Fabrique | = MC | |
|---|---|---|---|---|---|---|---|---|---|---|
| date | 03.03.2010 | date | 29.08.2011 | | | | | | + EP | |
| user | HARMS | user | harms | project no.: | 12552 | | | Granges-Paccot | page | 15 |
| | | ver.: | 3 | | | | | | of | 107 |

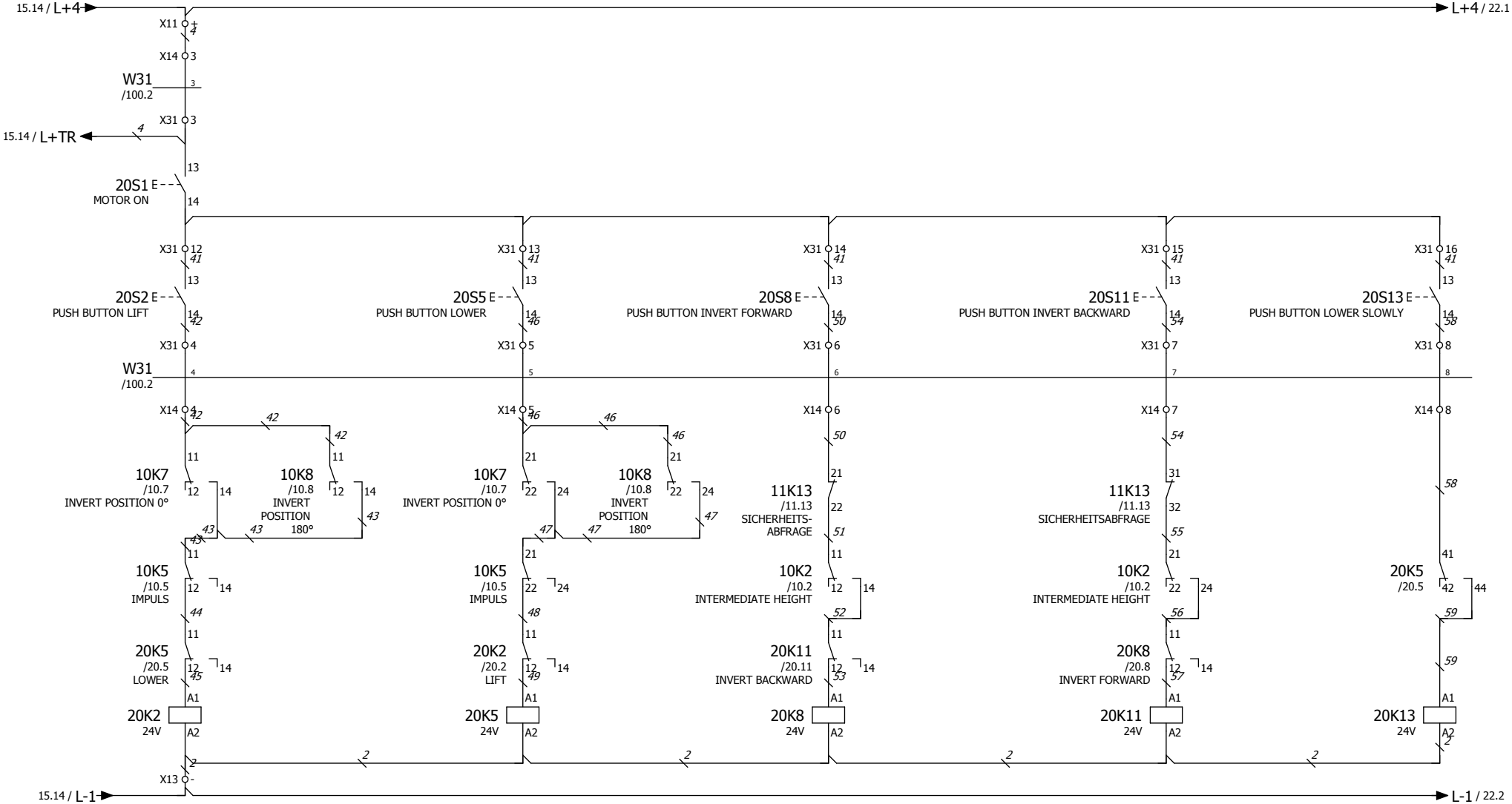


15 22

| | | | | | |
|---|---|---|---|---|---|
| SERVOLIFT<br>Albert-Einstein-Str.9<br>77656 Offenburg<br>Phone +49 (0) 781-6100-0<br>Email: sl@servolift.de | designed/checked<br>date 03.03.2010<br>user HARMS | change<br>date 29.08.2011<br>user harms<br>ver.: 3 | project: LIFTING COLUMN<br>project no.: 12552 | description<br>CIRCUIT DIAGRAM | Frewitt Fabrique<br>Granges-Paccot | = MC<br>+ EP<br>page 20<br>of 107 |

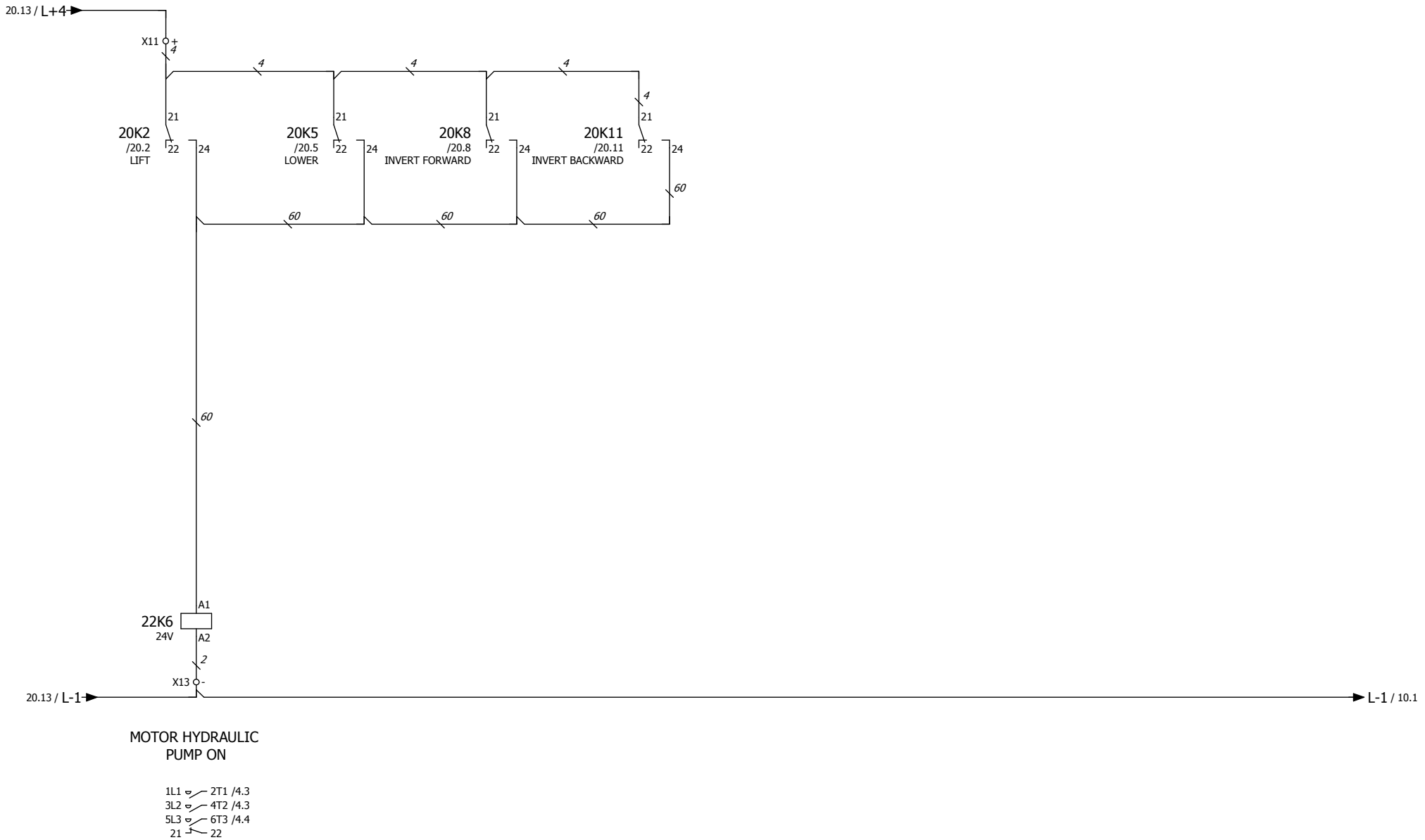




SERVOLIFT
Albert-Einstein-Str.9
77656 Offenburg
Phone +49 (0) 781-6100-0
Email: sl@servolift.de

| | | | | | | |
|---|---|---|---|---|---|---|
| designed/checked | change | project: LIFTING COLUMN | description CIRCUIT DIAGRAM | Frewitt Fabrique | = MC | |
| date 03.03.2010 | date 29.08.2011 | | | | + EP | |
| user HARMS | user harms | project no.: 12552 | | Granges-Paccot | page 22 | |
| | ver.: 3 | | | | of 107 | |

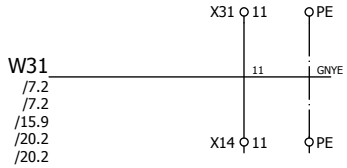




SERVOLIFT
Albert-Einstein-Str.9
77656 Offenburg
Phone +49 (0) 781-6100-0
Email: sl@servolift.de

| | | | | | | | |
|---|---|---|---|---|---|---|---|
| designed/checked | date 03.03.2010 user HARMS | change | date 29.08.2011 user harms ver.: 3 | project: | LIFTING COLUMN | description | OVERVIEW SPARE TERMINALS |
| | | | | project no.: | 12552 | Frewitt Fabrique | Granges-Paccot |

| | | |
|---|---|---|
| = MC | | |
| + EP | | |
| | page | 100 |
| | of | 107 |

# Terminal diagram

| Cable name | Cable type | |
|---|---|---|
| W3 | JZ 500 | 4G2,5 mm² |
| W2 | JZ HF | 4G2,5 mm² |
| W1 | JZ 500 | 5G2,5 mm² |

Strip designation: X10

| Wire number | Target design. | Connection | Terminal number | Jumpers | Target design. | Connection | Page/ path |
|---|---|---|---|---|---|---|---|
| GNYE | PE | PE | PE | - | X10 | PE | =MC+EP/4.5 |
| 3 | 4M3 | W1 | 10 | - | 22K6 | 6 | =MC+EP/4.4 |
| 2 | 4M3 | U1 | 9 | - | 22K6 | 4 | =MC+EP/4.3 |
| 1 | 4M3 | V1 | 8 | - | 22K6 | 2 | =MC+EP/3.4 |
| GNYE | 3X2 | PE | PE | - | 2G2 | PE | =MC+EP/3.4 |
| 3 | 3X2 | L3 | 7 | - | 3F3 | 6 | =MC+EP/3.4 |
| 2 | 3X2 | L2 | 6 | - | 3F3 | 4 | =MC+EP/3.3 |
| 1 | 3X2 | L1 | 5 | - | 3F3 | 2 | =MC+EP/3.3 |
| N | N | | 4 | - | | | =MC+EP/1.3 |
| L3 | L3 | | 3 | - | 1Q2 | 5 | =MC+EP/1.2 |
| L2 | L2 | | 2 | - | 1Q2 | 3 | =MC+EP/1.2 |
| L1 | L1 | | 1 | - | 1Q2 | 1 | =MC+EP/1.2 |
| GNYE | PE | | PE | | 2G2 | PE | =MC+EP/1.3 |

| Cable name | Cable type |
|---|---|

100 102

SERVOLIFT
Albert-Einstein-Str.9
77656 Offenburg
Phone +49 (0) 781-6100-0
Email: sl@servolift.de

| designed/checked | | change | |
|---|---|---|---|
| date | 03.03.2010 | date | 29.08.2011 |
| user | HARMS | user | harms |
| | | ver.: | 3 |

project: LIFTING COLUMN

project no.: 12552

description: X10

Frewitt Fabrique

Granges-Paccot

= MC
+ EP

# Terminal diagram

Strip designation: X11

| Field | | | | |
|---|---|---|---|---|
| Cable name / Cable type | | | | |
| Wire number | | | | |
| Target design. | 20K2 | X14 | 20K2 | 11A2 |
| Connection | 21 | 3 | 31 | 3 |
| Terminal number | + | + | + | + |
| Jumpers | ● | ● | ● | ● |
| Target design. | | | | 7A8 |
| Connection | | | | 13 |
| Cable name / Cable type | | | | |
| Page/ path | =MC+EP/22.2 | =MC+EP/20.2 | =MC+EP/15.2 | =MC+EP/11.13 |

101

103

# Terminal diagram

Strip designation

X12

| Cable name | Cable type |
|---|---|
| Wire number | |

| Target design. | Connection | Terminal number | Jumpers | Target design. | Connection |
|---|---|---|---|---|---|
| 7S2 | 11 | + | • | 2F3 | 2 |
| X14 | 14 | + | • | | |
| X14 | 21 | + | • | | |
| X14 | 24 | + | • | 11A2 | 1 |

| Cable name | Cable type |
|---|---|
| | |

| Page/ path |
|---|
| =MC+EP/7.2 |
| =MC+EP/10.2 |
| =MC+EP/10.7 |
| =MC+EP/10.8 |

102

104

SERVOLIFT
Albert-Einstein-Str.9
77656 Offenburg
Phone +49 (0) 781-6100-0
Email: sl@servolift.de

| designed/checked | | change | |
|---|---|---|---|
| date | 03.03.2010 | date | 29.08.2011 |
| user | HARMS | user | harms |
| | | ver.: | 3 |

project: LIFTING COLUMN

project no.: 12552

description
X12

Frewitt Fabrique

Granges-Paccot

= MC
+ EP

# Terminal diagram

Strip designation: X13

| Target design. | Connection | Terminal number | Jumpers | Target design. | Connection | Page/ path |
|---|---|---|---|---|---|---|
| X14 | 25 | - | • |  |  | =MC+EP/10.9 |
| X14 | 22 | - | • |  |  | =MC+EP/10.7 |
| X14 | 15 | - | • |  |  | =MC+EP/10.3 |
| 22K6 | A2 | - | • |  |  | =MC+EP/22.3 |
| 20K2 | A2 | - | • |  |  | =MC+EP/20.2 |
| X15 | 1M | - | • | 11K13 | A2 | =MC+EP/15.2 |
| 10K8 | A2 | - | • | 11A2 | 2 | =MC+EP/10.8 |
| 10K7 | A2 | - | • |  |  | =MC+EP/10.7 |
| 10K2 | A2 | - | • |  |  | =MC+EP/10.2 |
| 7A8 | A2 | - | • | 2G2 | - | =MC+EP/7.8 |

Jumpers: terminals 1–6 joined; terminals 7–10 joined.

Cable name | Cable type | Wire number



SERVOLIFT
Albert-Einstein-Str.9
77656 Offenburg
Phone +49 (0) 781-6100-0
Email: sl@servolift.de

| designed/checked | | change | |
|---|---|---|---|
| date | 03.03.2010 | date | 29.08.2011 |
| user | HARMS | user | harms |
| | | ver.: | 3 |

project: LIFTING COLUMN

project no.: 12552

description
X13

Frewitt Fabrique

Granges-Paccot

= MC
+ EP

# Terminal diagram

| Cable name | Cable type | |
|---|---|---|
| W14 | M12, V1 | 4x0,34 mm² |
| W13 | M12, V1 | 4x0,34 mm² |
| W5 | M12, V1 | 4x0,34 mm² |
| W4 | OZ 500 | 2x1 mm² |
| W31 | JZ 500 | 12G0,75 mm² |

Strip designation: **X14**

| Wire number | Target design. | Connection | Terminal number | Jumpers | Target design. | Connection | Cable name | Cable type | Page/ path |
|---|---|---|---|---|---|---|---|---|---|
| 1 | X31 | 1 | 1 | - | 7S2 | 12 | | | =MC+EP/7.2 |
| 2 | X31 | 2 | 2 | - | X14 | 12 | | | =MC+EP/7.2 |
| 3 | X31 | 3 | 3 | - | X11 | + | | | =MC+EP/20.2 |
| 4 | X31 | 4 | 4 | - | 10K7 | 11 | | | =MC+EP/20.2 |
| 5 | X31 | 5 | 5 | - | 10K7 | 21 | | | =MC+EP/20.5 |
| 6 | X31 | 6 | 6 | - | 11K13 | 21 | | | =MC+EP/20.8 |
| 7 | X31 | 7 | 7 | - | 11K13 | 31 | | | =MC+EP/20.11 |
| 8 | X31 | 8 | 8 | - | 20K5 | 41 | | | =MC+EP/20.13 |
| 9 | X31 | 9 | 9 | - | X15 | 6 | | | =MC+EP/15.10 |
| 10 | X31 | 10 | 10 | - | X15 | 7 | | | =MC+EP/15.11 |
| 11 | X31 | 11 | 11 | - | X14 | 2 | | | =MC+EP/100.3 |
| 1 | 7S8 | 1 | 12 | - | 7A8 | A1 | | | =MC+EP/7.8 |
| 2 | 7S8 | 2 | 13 | - | X12 | + | | | =MC+EP/10.2 |
| BN | 10B2 | 1 | 14 | - | X13 | - | | | =MC+EP/10.3 |
| BU | 10B2 | 3 | 15 | - | 10K2 | A1 | | | =MC+EP/10.2 |
| BK | 10B2 | 4 | 16 | - | 11A2 | 6 | | | =MC+EP/11.6 |
| | 11X6.1 | 1 | 17 | - | 11A2 | 7 | | | =MC+EP/11.6 |
| | 11X6.1 | 2 | 18 | - | 11A2 | 8 | | | =MC+EP/11.7 |
| | 11X6.1 | 3 | 19 | - | 11A2 | 9 | | | =MC+EP/11.7 |
| | 11X6.1 | 4 | 20 | - | X12 | + | | | =MC+EP/10.7 |
| BN | 10B7 | 1 | 21 | - | X13 | - | | | =MC+EP/100.3 |
| GNYE | X31 | PE | PE | - | X13 | - | | | =MC+EP/10.7 |
| BU | 10B7 | 3 | 22 | - | 10K7 | A1 | | | =MC+EP/10.7 |
| BK | 10B7 | 4 | 23 | - | X12 | + | | | =MC+EP/10.8 |
| BN | 10B8 | 1 | 24 | - | X12 | + | | | =MC+EP/10.9 |
| BU | 10B8 | 3 | 25 | - | X13 | - | | | =MC+EP/10.9 |
| BK | 10B8 | 4 | 26 | - | 10K8 | A1 | | | =MC+EP/10.8 |

104

106

| | | | | | | |
|---|---|---|---|---|---|---|
| SERVOLIFT<br>Albert-Einstein-Str.9<br>77656 Offenburg<br>Phone +49 (0) 781-6100-0<br>Email: sl@servolift.de | designed/checked<br>date 03.03.2010<br>user HARMS | change<br>date 29.08.2011<br>user harms<br>ver.: 3 | project: LIFTING COLUMN<br>project no.: 12552 | description<br>X14 | Frewitt Fabrique<br>Granges-Paccot | = MC<br>+ EP<br>page 105<br>of 107 |

# Terminal diagram

## Strip designation

## X15

| Page/path | Target design. | Connection | Terminal number | Jumpers | Target design. | Connection | Cable name | Cable type | Wire number |
|---|---|---|---|---|---|---|---|---|---|
| =MC+EP/15.2 | 15Y2 | 1 | 1 | | 20K2 | 34 | W12 | JZ-500 | 3x0,75 mm² |
| =MC+EP/15.2 | 15Y2 | 2 | 1M | | X13 | - | W11 | JZ-500 | 3x0,75 mm² |
| =MC+EP/15.2 | 15Y2 | PE | 1PE | | X10 | PE | W10 | JZ-500 | 3x0,75 mm² |
| =MC+EP/15.3 | 15Y4 | 1 | 2 | | 20K5 | 34 | W9 | JZ-500 | 3x0,75 mm² |
| =MC+EP/15.3 | 15Y4 | 2 | 2M | | | | W8 | JZ-500 | 3x0,75 mm² |
| =MC+EP/15.4 | 15Y4 | PE | 2PE | | X15 | 1PE | W7 | JZ-500 | 3x0,75 mm² |
| =MC+EP/15.5 | 15Y6 | 1 | 3 | | 20K8 | 34 | W6 | JZ-500 | 3x0,75 mm² |
| =MC+EP/15.5 | 15Y6 | 2 | 3M | | | | | | |
| =MC+EP/15.5 | 15Y6 | PE | 3PE | | X15 | 2PE | | | |
| =MC+EP/15.7 | 15Y8 | 1 | 4 | | 20K11 | 34 | | | |
| =MC+EP/15.7 | 15Y8 | 2 | 4M | | | | | | |
| =MC+EP/15.7 | 15Y8 | PE | 4PE | | X15 | 3PE | | | |
| =MC+EP/15.8 | 15Y9 | 1 | 5 | | 20K13 | 34 | | | |
| =MC+EP/15.8 | 15Y9 | 2 | 5M | | | | | | |
| =MC+EP/15.9 | 15Y9 | PE | 5PE | | X15 | 4PE | | | |
| =MC+EP/15.10 | 15Y10 | 1 | 6 | | X14 | 9 | | | |
| =MC+EP/15.10 | 15Y10 | 2 | 6M | | | | | | |
| =MC+EP/15.10 | 15Y10 | PE | 6PE | | X15 | 5PE | | | |
| =MC+EP/15.11 | 15Y11 | 1 | 7 | | X14 | 10 | | | |
| =MC+EP/15.11 | 15Y11 | 2 | 7M | | | | | | |
| =MC+EP/15.12 | 15Y11 | PE | 7PE | | X15 | 6PE | | | |

105

107

| | | | | | | |
|---|---|---|---|---|---|---|
| SERVOLIFT<br>Albert-Einstein-Str.9<br>77656 Offenburg<br>Phone +49 (0) 781-6100-0<br>Email: sl@servolift.de | designed/checked<br>date 03.03.2010<br>user HARMS | change<br>date 29.08.2011<br>user harms<br>ver.: 3 | project: LIFTING COLUMN<br>project no.: 12552 | description<br>X15 | Frewitt Fabrique<br>Granges-Paccot | = MC<br>+ EP<br>page 106<br>of 107 |

# Terminal diagram

Strip designation: X31

| Page/path | Cable name | Cable type | Wire number | Target design. | Connection | Terminal number | Jumpers | Target design. | Connection | Cable name | Cable type |
|---|---|---|---|---|---|---|---|---|---|---|---|
| =MC+EP/7.2 | | | | 7S3 | 11 | 1 | - | X14 | 1 | | |
| =MC+EP/7.2 | | | | 7S3 | 12 | 2 | - | X14 | 2 | | |
| =MC+EP/20.2 | | | | 20S1 | 13 | 3 | - | X14 | 3 | | |
| =MC+EP/20.2 | | | | 20S2 | 14 | 4 | - | X14 | 4 | | |
| =MC+EP/20.5 | | | | 20S5 | 14 | 5 | - | X14 | 5 | | |
| =MC+EP/20.8 | | | | 20S8 | 14 | 6 | - | X14 | 6 | | |
| =MC+EP/20.11 | | | | 20S11 | 14 | 7 | - | X14 | 7 | | |
| =MC+EP/20.13 | | | | 20S13 | 14 | 8 | - | X14 | 8 | | |
| =MC+EP/15.10 | | | | 15S10 | 14 | 9 | - | X14 | 9 | | |
| =MC+EP/15.11 | | | | 15S11 | 14 | 10 | - | X14 | 10 | | |
| =MC+EP/100.3 | | | | | | 11 | - | X14 | 11 | | |
| =MC+EP/20.2 | | | | 20S2 | 13 | 12 | - | 20S1 | 14 | | |
| =MC+EP/20.5 | | | | 20S5 | 13 | 13 | - | | | | |
| =MC+EP/20.8 | | | | 20S8 | 13 | 14 | - | | | | |
| =MC+EP/20.11 | | | | 20S11 | 13 | 15 | - | | | | |
| =MC+EP/20.13 | | | | 20S13 | 13 | 16 | - | X14 | PE | | |
| =MC+EP/100.3 | | | | | | PE | | PE | | | |
| | | | | | | GNYE | | | | W31 | JZ 500 12G0,75 mm² |

106

| | | | | | | |
|---|---|---|---|---|---|---|
| SERVOLIFT<br>Albert-Einstein-Str.9<br>77656 Offenburg<br>Phone +49 (0) 781-6100-0<br>Email: sl@servolift.de | designed/checked<br>date 03.03.2010<br>user HARMS | change<br>date 29.08.2011<br>user harms<br>ver.: 3 | project: LIFTING COLUMN<br>project no.: 12552 | description<br>X31 | Frewitt Fabrique<br>Granges-Paccot | = MC<br>+ EP<br>page 107<br>of 107 |

SERVOLIFT

# HYDRAULIC PARTS LIST 12552

## Project no. 1031529

| Project: | Name | Date | Revision | Dwg. no. |
|---|---|---|---|---|
| Lifter for Coniwitt 150 / MF3 | Labude | 29.08.2011 | 0 | 12552-61-001 |

| Pos. | Nr. | Qty | | Description | Parts-# Manufacturer<br>*Manufacturer* | Parts-#<br>Servolift | location |
|---|---|---|---|---|---|---|---|
| 10 | **H 0.1** | 1 | pcs | **pressure gauge NG63/DIN - 160 bar**<br>bottom fitting | *Lotz Hydraulik GmbH* | **103252** | control cabinet |
| 20 | **H 1.0** | 1 | pcs | **lift cylnder** | *Servolift* | **127586** | column |
| 30 | **H 1.1** | 1 | pcs | **check valve with hydr. release RH 1** | *HAWE Hydraulik SE* | **101190** | column |
| 40 | **H 1.2** | 1 | pcs | **hydr. pressure limiting valve G3/8"**<br>MVCS46 E, Bypass, R=500bar | *HAWE Hydraulik SE* | **101192** | control cabinet |
| 50 | **H 1.3** | 1 | pcs | **flow control valve VCD-RU 3/8"** | *Oil Control GmbH* | **110982** | control cabinet |
| 60 | **H 1.4** | 1 | pcs | **2/2 Wegesitzventil-Patrone NO2/2-SBO-223**<br>beidseitig, offen, Typ 223 | *Nold Hydraulik* | **132672** | control cabinet |
| 70 | **H 1.5** | 1 | pcs | **throttle non-return valve G1/4"**<br>F-Serie, steel | *Parker Hannifin GmbH & Co. KG* | **130006** | control cabinet |
| 80 | **H 1.6** | 1 | pcs | **sieve and filter element HFE 1/4 F**<br>in housing | *HAWE Hydraulik SE* | **122971** | control cabinet |
| 90 | **H 1.7** | 1 | pcs | **sieve and filter element HFE 1/4 F**<br>in housing | *HAWE Hydraulik SE* | **122971** | control cabinet |
| 100 | **H 1.8** | 1 | pcs | **filtration disk for screwing in HFC 1/4 F**<br>3 elements, 100µm | *HAWE Hydraulik SE* | **122907** | control cabinet |
| 104 | **H 1.9** | 1 | pcs | **Hydr. pressure limiting valve G 1/4"**<br>MV41 E-70, R=20bar | *HAWE Hydraulik SE* | **101186** | control cabinet |
| 110 | **H 2.0** | 1 | pcs | **hydraulic motor OMR 315** | *Lotz Hydraulik GmbH* | **101216** | frontcase |
| 120 | **H 2.1** | 1 | pcs | **hydraulic disc brake ELB288**<br>OMP/OMR, shaft Ø25mm | | **128713** | frontcase |
| 130 | **H 2.2** | 1 | pcs | **pressure gauge NG63/DIN - 160 bar**<br>bottom fitting | *Lotz Hydraulik GmbH* | **103252** | frontcase |
| 140 | **H 2.3** | 1 | pcs | **load holding valve**<br>LHK 33 F-21 W-140/140 | *Heilmeier u. Weinlein* | **101193** | frontcase |
| 150 | **H 2.4** | 1 | pcs | **throttle non-return valve G1/4"**<br>F-Serie, steel | *Parker Hannifin GmbH & Co. KG* | **130006** | frontcase |
| 160 | **H 2.5** | 1 | pcs | **throttle non-return valve G1/4"**<br>F-Serie, steel | *Parker Hannifin GmbH & Co. KG* | **130006** | frontcase |
| 165 | **H 2.6** | 1 | pcs | **Hydr. double pressure limiting valve G3/8"**<br>DMV 42 F | *HAWE Hydraulik SE* | **111808** | control cabinet |
| 170 | **H 5.0** | 1 | pcs | **power pack** | *Servolift* | **128285** | control cabinet |
| 180 | **H 6.0** | 1 | pcs | **control-block** | *Servolift* | **128309** | control cabinet |

SERVOLIFT

# HOSE LIST 12552

## Project no. 1031529

| Project: | Name | Date | Revision | Dwg. no. |
|---|---|---|---|---|
| Lifter for Coniwitt 150 / MF3 | Labude | 30.08.2011 | 0 | 12552-61-001 |

| Pos. | Nr. | Qty | | Description | Parts-# Manufacturer<br>Manufacturer | Parts-# Servolift | location |
|---|---|---|---|---|---|---|---|
| 10 | **No. 1** | 1 | pcs | **hydraulic hose SC1 DN 12x 500mm EN 857**<br>2x DKO-L M18x1,5<br>**length:** 500 mm | *Hansa-Flex Hydraulik GmbH* | **132561** | control cabinet |
| 20 | **No. 2** | 1 | pcs | **hydraulic hose SC1 DN 12x 500mm EN 857**<br>2x DKO-L M18x1,5<br>**length:** 500 mm | *Hansa-Flex Hydraulik GmbH* | **132561** | control cabinet |
| 30 | **No. 3** | 1 | pcs | **hydraulic hose SC1 DN 10x 500mm EN 857**<br>2x DKO-L M16x1,5<br>**length:** 500 mm | *Hansa-Flex Hydraulik GmbH* | **132566** | control cabinet |
| 40 | **No. 4** | 1 | pcs | **hydraulic hose SC1 DN 8x 500mm EN 857**<br>2x DKO-L M14x1,5<br>**length:** 500 mm | *Hansa-Flex Hydraulik GmbH* | **132546** | control cabinet |
| 50 | **No. 5** | 1 | pcs | **hydraulic hose SC1 DN 8x 450mm EN 857**<br>2x DKO-L M14x1,5<br>**length:** 450 mm | *Hansa-Flex Hydraulik GmbH* | **132542** | control cabinet |
| 60 | **No. 6** | 1 | pcs | **hydraulic hose SC1 DN 8x 450mm EN 857**<br>2x DKO-L M14x1,5<br>**length:** 450 mm | *Hansa-Flex Hydraulik GmbH* | **132542** | control cabinet |
| 70 | **No. 7** | 1 | pcs | **hydraulic hose DN 8, DKO-L M 14x1,5 both sides**<br>Typ Tractor/1K prEN857/1SC<br>**length:** 3950 mm | | **8012933** | column |
| 80 | **No. 8** | 1 | pcs | **hydraulic hose DN 8, DKO-L M 14x1,5 both sides**<br>Typ Tractor/1K prEN857/1SC<br>**length:** 3950 mm | | **8012933** | column |
| 90 | **No. 9** | 1 | pcs | **hydraulic hose SC1 DN 8x 550mm EN 857**<br>2x DKO-L M14x1,5<br>**length:** 550 mm | *Hansa-Flex Hydraulik GmbH* | **132547** | frontcase |
| 100 | **No.10** | 1 | pcs | **hydraulic hose SC1 DN 8x 550mm EN 857**<br>2x DKO-L M14x1,5<br>**length:** 550 mm | *Hansa-Flex Hydraulik GmbH* | **132547** | frontcase |
| 110 | **No.11** | 1 | pcs | **hydraulic hose SC1 DN 8x 450mm EN 857**<br>2x DKO-L M14x1,5<br>**length:** 450 mm | *Hansa-Flex Hydraulik GmbH* | **132542** | frontcase |
| 120 | **No.12** | 1 | pcs | **hydraulic hose SC1 DN 8x 450mm EN 857**<br>2x DKO-L M14x1,5<br>**length:** 450 mm | *Hansa-Flex Hydraulik GmbH* | **132542** | frontcase |
| 130 | **No.13** | 1 | pcs | **hydraulic hose SC1 DN 8x 450mm EN 857**<br>2x DKO-L M14x1,5<br>**length:** 450 mm | *Hansa-Flex Hydraulik GmbH* | **132542** | frontcase |
| 140 | **No.14** | 1 | pcs | **hydraulic hose SC1 DN 10x 400mm EN 857**<br>2x DKO-L M16x1,5<br>**length:** 400 mm | *Hansa-Flex Hydraulik GmbH* | **132565** | control cabinet |
| 150 | **No.15** | 1 | pcs | **hydraulic hose SC1 DN 10x 600mm EN 857**<br>2x DKO-L M16x1,5<br>**length:** 600 mm | *Hansa-Flex Hydraulik GmbH* | **132567** | control cabinet |
| 170 | **No.17** | 1 | pcs | **hydraulic hose SC1 DN 8x 300mm EN 857**<br>2x DKO-L M14x1,5<br>**length:** 300 mm | *Hansa-Flex Hydraulik GmbH* | **132540** | control cabinet |
| 180 | **No.18** | 1 | pcs | **hydraulic hose SC1 DN 8x 250mm EN 857**<br>2x DKO-L M14x1,5<br>**length:** 250 mm | *Hansa-Flex Hydraulik GmbH* | **132539** | control cabinet |

SERVOLIFT

# PNEUMATIC PARTS LIST 12552

## Project no. 1031529

| Project: | Name | Date | Revision | Dwg. no. |
|---|---|---|---|---|
| Lifter for Coniwitt 150 / MF3 | Labude | 30.08.2011 | 0 | 12552-62-001 |

| Pos. | Nr. | Qty | | Description | *Parts-# Manufacturer Manufacturer* | Parts-# Servolift | location |
|---|---|---|---|---|---|---|---|
| 10 | **P 0.1** | 1 | pcs | **Air maintenance unit combination (1.150 l/min)**<br>LFR-1/4-D-MINI-KC | *Festo KG* | **127112** | control cabinet |
| 20 | **P 0.2** | 1 | pcs | **pressure switch, 0-10 bar**<br>IP65, 230V/2A | *Suco* | **107325** | control cabinet |
| 30 | **P 1.0** | 1 | pcs | **pneu. cylinder dia.20, stroke 50, ISO 6432** | *Festo KG* | **103078** | control cabinet |
| 40 | **P 1.1** | 1 | pcs | **3/2 valve G1/8" MFH-3-1/8-EX**<br>solenoid/ spring actuated | *Festo KG* | **128171** | control cabinet |
| 50 | | 1 | pcs | **solenoid coil Ex-protect zone 2+22**<br>MSFG-24-EX | *Festo KG* | **128092** | control cabinet |
| 52 | | 1 | pcs | **plug for valves (20x28mm) for MSFG-24-EX**<br>type MSSD-F-M16 | *Festo KG* | **129839** | control cabinet |
| 60 | **P 1.2** | 1 | pcs | **3/2 valve G1/8" MFH-3-1/8-EX**<br>solenoid/ spring actuated | *Festo KG* | **128171** | control cabinet |
| 70 | | 1 | pcs | **solenoid coil Ex-protect zone 2+22**<br>MSFG-24-EX | *Festo KG* | **128092** | control cabinet |
| 72 | | 1 | pcs | **plug for valves (20x28mm) for MSFG-24-EX**<br>type MSSD-F-M16 | *Festo KG* | **129839** | control cabinet |
| 80 | **P 2.0** | 1 | pcs | **pneu. cylinder dia.20, stroke 50, ISO 6432** | *Festo KG* | **103078** | control cabinet |
| 90 | **P 2.1** | 1 | pcs | **3/2 valve G1/8" MFH-3-1/8-EX**<br>solenoid/ spring actuated | *Festo KG* | **128171** | control cabinet |
| 100 | | 1 | pcs | **solenoid coil Ex-protect zone 2+22**<br>MSFG-24-EX | *Festo KG* | **128092** | control cabinet |
| 102 | | 1 | pcs | **plug for valves (20x28mm) for MSFG-24-EX**<br>type MSSD-F-M16 | *Festo KG* | **129839** | control cabinet |
| 110 | **P 2.2** | 1 | pcs | **3/2 valve G1/8" MFH-3-1/8-EX**<br>solenoid/ spring actuated | *Festo KG* | **128171** | control cabinet |
| 120 | | 1 | pcs | **solenoid coil Ex-protect zone 2+22**<br>MSFG-24-EX | *Festo KG* | **128092** | control cabinet |
| 122 | | 1 | pcs | **plug for valves (20x28mm) for MSFG-24-EX**<br>type MSSD-F-M16 | *Festo KG* | **129839** | control cabinet |
| 130 | **P 3.1** | 1 | pcs | **Pneum. Schnellkupplung m. Innengewinde G1/4" NW 5**<br>L=38, 1.4305 | *Lotz Hydraulik GmbH* | **122722** | support arm |
| 140 | **P 3.2** | 1 | pcs | **Pneum. Einstecktülle für Schlauch Ø 6 NW 5**<br>L=32, 1.4305 | *Rico* | **122723** | support arm |
| 145 | **P 3.3** | 1 | pcs | **pressure regulator**<br>LR-1/4-D-7-MINI | *Festo KG* | **8007775** | support arm |
| 150 | **P 4.0** | 1 | pcs | **pneu. height stop**<br>upper | | **-** | column |
| 155 | **P 4.01** | 1 | pcs | **pneu. height stop**<br>lower | | **-** | column |
| 160 | **P 4.1** | 1 | pcs | **3/2 valve G1/8" MFH-3-1/8-EX**<br>solenoid/ spring actuated | *Festo KG* | **128171** | control cabinet |
| 161 | | 1 | pcs | **solenoid coil Ex-protect zone 2+22**<br>MSFG-24-EX | *Festo KG* | **128092** | control cabinet |
| 162 | | 1 | pcs | **plug for valves (20x28mm) for MSFG-24-EX**<br>type MSSD-F-M16 | *Festo KG* | **129839** | control cabinet |
| 170 | **P 4.2** | 1 | pcs | **3/2 valve G1/8" MFH-3-1/8-EX**<br>solenoid/ spring actuated | *Festo KG* | **128171** | control cabinet |
| 180 | | 1 | pcs | **solenoid coil Ex-protect zone 2+22**<br>MSFG-24-EX | *Festo KG* | **128092** | control cabinet |
| 182 | | 1 | pcs | **plug for valves (20x28mm) for MSFG-24-EX**<br>type MSSD-F-M16 | *Festo KG* | **129839** | control cabinet |

SERVOLIFT

# SPARE PARTS LIST 12552

## Project no. 1031529

| Parts-# Servolift | Qty | Description | Manufacturer | location |
|---|---|---|---|---|
| **101186** | 1 pcs | **Hydr. pressure limiting valve G 1/4"**<br>MV41 E-70, R=20bar | HAWE Hydraulik SE | **control cabinet** |
| **128171** | 1 pcs | **3/2 valve G1/8" MFH-3-1/8-EX**<br>solenoid/ spring actuated | Festo KG | **control cabinet** |
| **104924** | 4 pcs | **cover element M12 for socket cap screw**<br>in countersinking, GPN 340, grey | Pöppelmann | **height stop device** |
| **127102** | 2 pcs | **synthetic slide bushing, cyl. ISO 3547-1**<br>GSM-0608-10 (6x8x10) | Igus GmbH | **height stop** |
| **101124** | 2 pcs | **bushing, cyl. ISO 3547-1615 DU**<br>(16x18x51), steel back | Brammer GmbH | **height stop** |
| **103693** | 2 pcs | **ball RB 15,875 RS** | | **height stop** |
| **102369** | 2 pcs | **spring VD-146 DIN 2098,1,0x12,5x24,0x3,5 W.**<br>Nr. 1.4310 | Gutekunst & Co. Federnfabriken | **height stop** |
| **127106** | 1 pcs | **grooved ring 8x12x3**<br>type 2HO, NBR | Techno Parts GmbH | **height stop** |
| **110160** | 2,8 m | **sealing for cabinet door**<br>self clamping | Dirak GmbH & Co. KG | **control cabinet** |
| **126424** | 10 l | **hydraulic oil, Molyduval Biolube 46**<br>(food grade quality) | | **control cabinet** |
| **8012821** | 1 pcs | **E-Motor EX Zone 22, 1,5/1,75kW, 90L** | Siemens AG | **power pack** |
| **111290** | 1 pcs | **power pack without motor, without valve**<br>type MC4, NG7/ 3,2cm³ | Hydr-App. SpA | **power pack** |
| **101785** | 4 pcs | **rubber bumper 30x20 - M8, 55 Shore A**<br>bolt / thread, NR | Reiff Technische Produkte GmbH | **power pack** |
| **125204** | 1 pcs | **coupling for hydraulic power pack type MC2/MC4**<br>for shaft Ø 24 | Lotz Hydraulik GmbH | **power pack** |
| **103214** | 4 pcs | **cover element M 16 for hex cap screw**<br>GPN 1000, SW24, grey | ITK Kienzler GmbH & Co.KG | **bottom group** |
| **106325** | 4,1 m | **cover band 140 mm width, with sealed rim**<br>white, with FDA cert. | Siegling Ernst | **column** |
| **111489** | 1 pcs | **round cover lid Ø160 for supporting arm or column**<br>AISI 316L, Bl 0,7 | Hommel GmbH | **column** |
| **104923** | 2 pcs | **cover elementM 10 for socket head cap screw**<br>in countersinking, GPN 340, grey | Pöppelmann GmbH & Co. | **column** |
| **101272** | 1 pcs | **Spherical ball bearing 40x80x18 CS 208 NPPB** | Steinebronn Industrietechnik | **top bearing** |
| **128138** | 2 pcs | **flange for flexa duct type 321, polyamide**<br>M50x1,5 - RAL 9006 | Servolift | **power supply** |
| **125823** | 4 pcs | **flexa fitting type LKI-M**<br>M50x1,5 for hose ND 45 (Pg36) | Flexa | **power supply** |
| **102862** | 1 m | **flexible duct Airflex-KUW, grey**<br>AD 45 (M50x1,5) | Flexa | **power supply** |
| **112432** | 1 pcs | **seal set for lift cylinder Ø40, plunger type** | Servolift | **lift cylinder** |
| **100629** | 2 pcs | **slide bearing, cyl. ISO 3547-3220 DU**<br>(32x36x20) steel back | Glacier Garlock | **idler pulley** |
| **108012** | 2 pcs | **bushing GFM-3236-16** | Igus GmbH | **idler pulley** |
| **128354** | 2 pcs | **lift chain, type flyer 5/8"-3x4 with end plates** | | **column** |
| **103212** | 2 pcs | **plastic cap for hexagon head screw M12 19 A/F**<br>,grey | Pöppelmann | **column** |
| **100625** | 2 pcs | **slide bearing, cyl. ISO 3547-2515 DU**<br>(25x28x15) steel back | Glacier Garlock | **lift sled** |
| **101249** | 4 pcs | **idler pulley standard 0**<br>HMTR 24x61,8x24 2RS | Schaeffler Technologies GmbH&Co. | **lift sled** |
| **104176** | 1 pcs | **cover D=120mm, H=4mm 0.7mm**<br>1.4571 | Hommel GmbH | **support arm** |
| **125647** | 1 pcs | **autom. lubricator, filled with**<br>food grade grease,12 month | Servolift | **inversion drive unit** |
| **112333** | 1 pcs | **V-seal type VL 300 (D=285-305 mm)** | Brammer GmbH | **inversion drive unit** |
| **103214** | 12 pcs | **cover element M 16 for hex cap screw**<br>GPN 1000, SW24, grey | ITK Kienzler GmbH & Co.KG | **inversion drive unit** |

SERVOLIFT

# SPARE PARTS LIST 12552

## Project no. 1031529

| Parts-# Servolift | Qty | Description | Manufacturer | location |
|---|---|---|---|---|
| **123138** | 2 pcs | **guiding piece for coverband 140 with guidance**<br>PE conductive | Servolift | **frontcase** |
| **104176** | 1 pcs | **cover D=120mm, H=4mm 0.7mm**<br>1.4571 | Hommel GmbH | **inversion drive unit** |
| **125823** | 2 pcs | **flexa fitting type LKI-M**<br>M50x1,5 for hose ND 45 (Pg36) | Flexa | **inversion drive unit** |
| **102862** | 2 m | **flexible duct Airflex-KUW, grey**<br>AD 45 (M50x1,5) | Flexa | **inversion drive unit** |
| **104924** | 8 pcs | **cover element M12 for socket cap screw**<br>in countersinking, GPN 340, grey | Pöppelmann | |
| **127102** | 4 pcs | **synthetic slide bushing, cyl. ISO 3547-1**<br>GSM-0608-10 (6x8x10) | Igus GmbH | |
| **101124** | 4 pcs | **bushing, cyl. ISO 3547-1615 DU**<br>(16x18x51), steel back | Brammer GmbH | |
| **102369** | 2 pcs | **spring VD-146 DIN 2098,1,0x12,5x24,0x3,5 W.**<br>Nr. 1.4310 | Gutekunst & Co. Federnfabriken | |
| **127106** | 2 pcs | **grooved ring 8x12x3**<br>type 2HO, NBR | Techno Parts GmbH | |
| **107325** | 1 pcs | **pressure switch, 0-10 bar**<br>IP65, 230V/2A | Suco | |
| **111636** | 1 pcs | **temperatur switch, IP65**<br>TS-70/X/12 | Hydac/Flutec | |

# ELECTRIC PARTS LIST 12552

**Project no. 1031529**

Machine Lifter
29.08.2011 / Ver. 3
Name: Harms/Lg

| Pos. | Qty | Unit | Component/ Marking | Description | Manufacturer | Parts-# | |
|---|---|---|---|---|---|---|---|
| 10 | 1 | pcs. | 7A8 | safety relay, 24V DC, 2 NC<br>SNO2004K AC/DC 24V 50-60Hz | Wieland Electric GmbH | 614723 | |
| 20 | 1 | pcs. | 11A2 | safety switch - control unit 462 121 G1U<br>for 4 sensors, 24V DC, cat.1 | Elobau Elektrobauelemente | 613716 | |
| 30 | 1 | pcs. | 10B2 | proximity switch, flat housing, 3G/3D<br>NO, 2m cable | Pepperl+Fuchs GmbH | 6902442 | II 3D Ex tD A22 IP67 T80°C X<br>II 3G Ex nA IIC T6 X |
| 40 | 1 | pcs. | | non pre-wired cable socket for prox.switch, M8<br>3 poles, without LED, Slimline | Murrelektronik GmbH | 615024 | |
| 50 | 1 | pcs. | 10B7 | proximity switch M18<br>NO, DC, 8b, plugable, 3G/3D | Pepperl+Fuchs GmbH | 614276 | II 3D IP67 T91°C X<br>II 3G Ex nA IIC T6 X |
| 70 | 1 | pcs. | 10B8 | proximity switch M18<br>NO, DC, 8b, plugable, 3G/3D | Pepperl+Fuchs GmbH | 614276 | II 3D IP67 T91°C X<br>II 3G Ex nA IIC T6 X |
| 90 | 1 | pcs. | 2F2 | miniature circuit breaker, 4A, 2 pole,<br>D-10-20xIN | Siemens AG | 613996 | |
| 100 | 1 | pcs. | 2F3 | miniature circuit breaker, 4A, 1 pole<br>C-5-10xIN | Siemens AG | 614034 | |
| 110 | 1 | pcs. | 2F6 | miniature circuit breaker, 4A, 1 pole<br>C-5-10xIN | Siemens AG | 614034 | |
| 120 | 1 | pcs. | | auxiliary contact<br>1NO+1NC | Siemens AG | 614029 | |
| 130 | 1 | pcs. | 3F3 | miniature circuit breaker, 10A, 3 poles<br>C-5-10xIN | Siemens AG | 614009 | |
| 140 | 1 | pcs. | 2G2 | compact power supply MEN 5<br>230-400VAC+-15V/24VDC; 5/6A | Murrelektronik GmbH | 614393 | |
| 150 | 1 | pcs. | | FKS-fuse, max. 32V, 10A | Pudenz Wilhelm GmbH | 612037 | |
| 160 | 1 | pcs. | 10K2 | relay modules, 2C/O, 12,4mm wide<br>24V DC | Murrelektronik GmbH | 614783 | |
| 170 | 1 | pcs. | 10K4 | timer multifunction, 6,2mm<br>24 V DC, 0,1-300 s | Murrelektronik GmbH | 613621 | |
| 180 | 1 | pcs. | 10K5 | relay modules, 2C/O, 12,4mm wide<br>24V DC | Murrelektronik GmbH | 614783 | |
| 190 | 1 | pcs. | 10K7 | relay modules, 2C/O, 12,4mm wide<br>24V DC | Murrelektronik GmbH | 614783 | |
| 200 | 1 | pcs. | 10K8 | relay modules, 2C/O, 12,4mm wide<br>24V DC | Murrelektronik GmbH | 614783 | |
| 210 | 1 | pcs. | 11K13 | contactor relay 24V DC, 2NO/2NC | Siemens AG | 615090 | |
| 220 | 1 | pcs. | 20K2 | relay 24VDC, 4 NO/NC | Siemens AG | 614738 | |

| Pos. | Qty | Unit | Component/ Marking | Description | Manufacturer | Parts-# | |
|---|---|---|---|---|---|---|---|
| 230 | 1 | pcs. | 20K5 | relay 24VDC, 4 NO/NC | Siemens AG | 614738 | |
| 240 | 1 | pcs. | 20K8 | relay 24VDC, 4 NO/NC | Siemens AG | 614738 | |
| 250 | 1 | pcs. | 20K11 | relay 24VDC, 4 NO/NC | Siemens AG | 614738 | |
| 260 | 1 | pcs. | 20K13 | relay 24VDC, 4 NO/NC | Siemens AG | 614738 | |
| 270 | 1 | pcs. | 22K6 | motor contactor 4KW<br>3NO, 1NC, 24V DC, with diode | Siemens AG | 615120 | |
| 280 | 1 | pcs. | 4M3 | E-Motor EX Zone 22, 1,5/1,75kW, 90L<br>3x230/400V 50Hz/3x460V 60Hz, V18, IP55, Fl Ø140 | Siemens AG | 8012821 | II3D Ex tD A22 IP55 T125°C |
| 290 | 1 | pcs. | 1Q2 | main switch 25A/7,5kW, rear mounting | Kraus & Naimer | 613148 | |
| 300 | 1 | pcs. | 4Q3 | motor protective circuit breaker, S00<br>2,8-4A, without aux. switch | Siemens AG | 615105 | |
| 310 | 1 | pcs. | 7S2 | emergency stop button M22-PV | Eaton | 613438 | |
| 320 | 1 | pcs. | | fixing adapter, M22-A<br>for contact elements M22-K | Eaton | 613381 | |
| 330 | 1 | pcs. | | contact element, NC, M22-K01 | Eaton | 613380 | |
| 340 | 1 | pcs. | | contact element, NO, M22-K10<br>for RMQ-Titan, front fixing | Eaton | 613379 | |
| 350 | 1 | pcs. | | Emergency stop plate M22-XAK11<br>round 90 mm - Ø 22,5 | Eaton | 615125 | |
| 360 | 1 | pcs. | 7S3 | emergency stop button M22-PV | Eaton | 613438 | |
| 370 | 1 | pcs. | | fixing adapter, M22-A<br>for contact elements M22-K | Eaton | 613381 | |
| 380 | 1 | pcs. | | contact element, NC, M22-K01 | Eaton | 613380 | |
| 390 | 1 | pcs. | | contact element, NO, M22-K10<br>for RMQ-Titan, front fixing | Eaton | 613379 | |
| 400 | 1 | pcs. | | Emergency stop plate M22-XAK11<br>round 90 mm - Ø 22,5 | Eaton | 615125 | |
| 410 | 1 | pcs. | 7S8.1 | pressure switch, 0-10 bar<br>IP65, 230V/2A | Suco | 107325 | |
| 420 | 1 | pcs. | 11S6 | proximity switch Ex, 10m cable<br>stainless, M30 | Elobau Elektrobauelemente | 6902802 | |

| Pos. | Qty | Unit | Component/ Marking | Description | Manufacturer | Parts-# | |
|---|---|---|---|---|---|---|---|
| 425 | 1 | pcs. | | proximity switch - magnet stainless | Elobau Elektrobauelemente | 613746 | |
| 430 | 1 | pcs. | 15S10 | push button M22D-S black | Eaton | 613446 | |
| 440 | 1 | pcs. | | fixing adapter, M22-A for contact elements M22-K | Eaton | 613381 | |
| 450 | 1 | pcs. | | contact element, NO, M22-K10 for RMQ-Titan, front fixing | Eaton | 613379 | |
| 460 | 1 | pcs. | 15S11 | push button M22D-S black | Eaton | 613446 | |
| 470 | 1 | pcs. | | fixing adapter, M22-A for contact elements M22-K | Eaton | 613381 | |
| 480 | 1 | pcs. | | contact element, NO, M22-K10 for RMQ-Titan, front fixing | Eaton | 613379 | |
| 490 | 1 | pcs. | 20S1 | push button M22D-S black | Eaton | 613446 | |
| 500 | 1 | pcs. | | fixing adapter, M22-A for contact elements M22-K | Eaton | 613381 | |
| 510 | 1 | pcs. | | contact element, NO, M22-K10 for RMQ-Titan, front fixing | Eaton | 613379 | |
| 520 | 1 | pcs. | 20S2 | push button M22D-S black | Eaton | 613446 | |
| 530 | 1 | pcs. | | fixing adapter, M22-A for contact elements M22-K | Eaton | 613381 | |
| 540 | 1 | pcs. | | contact element, NO, M22-K10 for RMQ-Titan, front fixing | Eaton | 613379 | |
| 550 | 1 | pcs. | 20S5 | push button M22D-S black | Eaton | 613446 | |
| 560 | 1 | pcs. | | fixing adapter, M22-A for contact elements M22-K | Eaton | 613381 | |
| 570 | 1 | pcs. | | contact element, NO, M22-K10 for RMQ-Titan, front fixing | Eaton | 613379 | |
| 580 | 1 | pcs. | 20S8 | push button M22D-S black | Eaton | 613446 | |
| 590 | 1 | pcs. | | fixing adapter, M22-A for contact elements M22-K | Eaton | 613381 | |
| 600 | 1 | pcs. | | contact element, NO, M22-K10 for RMQ-Titan, front fixing | Eaton | 613379 | |
| 610 | 1 | pcs. | 20S11 | push button M22D-S black | Eaton | 613446 | |

| Pos. | Qty | Unit | Component/ Marking | Description | Manufacturer | Parts-# | |
|---|---|---|---|---|---|---|---|
| 620 | 1 | pcs. | | fixing adapter, M22-A<br>for contact elements M22-K | Eaton | 613381 | |
| 630 | 1 | pcs. | | contact element, NO, M22-K10<br>for RMQ-Titan, front fixing | Eaton | 613379 | |
| 640 | 1 | pcs. | 20S13 | push button M22D-S black | Eaton | 613446 | |
| 650 | 1 | pcs. | | fixing adapter, M22-A<br>for contact elements M22-K | Eaton | 613381 | |
| 660 | 1 | pcs. | | contact element, NO, M22-K10<br>for RMQ-Titan, front fixing | Eaton | 613379 | |
| 670 | 1 | pcs. | 3X2 | Steckdose-Ex mit Schalter, 380-415V, 16A, 4-pol.<br>PE auf 6h, rot, Ex-Zonen 2 + 22 | Stahl R. Schaltgeräte GmbH | 6902534 | II 2G/D EEx ed IIC T6 IP66 T80°C<br>PTB 03 ATEX 1227 |
| 680 | 1 | pcs. | 11X6 | sensor plug connector, 4-poles, SACC-M12MS-4QCON<br>male, straight version | Phoenix Contact | 613634 | |
| 690 | 1 | pcs. | 11X6.1 | sensor plug connector, 4-poles, SACC-M12FS-4QCON<br>female, straight version | Phoenix Contact | 613635 | |
| 700 | 1 | pcs. | 15Y2 | solenoid coil Ex-protect zone 2+22<br>MSFG-24-EX | Festo KG | 128092 | II 3GD EEx nA II 130°C X IP65 |
| 710 | 1 | pcs. | 15Y4 | solenoid coil Ex-protect zone 2+22<br>MSFG-24-EX | Festo KG | 128092 | II 3GD EEx nA II 130°C X IP65 |
| 720 | 1 | pcs. | 15Y6 | solenoid coil Ex-protect zone 2+22<br>MSFG-24-EX | Festo KG | 128092 | II 3GD EEx nA II 130°C X IP65 |
| 730 | 1 | pcs. | 15Y8 | solenoid coil Ex-protect zone 2+22<br>MSFG-24-EX | Festo KG | 128092 | II 3GD EEx nA II 130°C X IP65 |
| 740 | 1 | pcs. | 15Y9 | solenoid coil Ex-protect zone 2+22<br>MSFG-24-EX | Festo KG | 128092 | II 3GD EEx nA II 130°C X IP65 |
| 750 | 1 | pcs. | 15Y10 | solenoid coil Ex-protect zone 2+22<br>MSFG-24-EX | Festo KG | 128092 | II 3GD EEx nA II 130°C X IP65 |
| 760 | 1 | pcs. | 15Y11 | solenoid coil Ex-protect zone 2+22<br>MSFG-24-EX | Festo KG | 128092 | II 3GD EEx nA II 130°C X IP65 |
| 770 | 1 | M | W1 | flexible control cable<br>5x 2,5qmm, JZ-500 | Helukabel GmbH | 602708 | |
| 780 | 10 | M | W2 | high flexible cable<br>4x 2,5qmm, JZ-HF | Helukabel GmbH | 613734 | |
| 790 | 2 | M | W3 | flexible control cable<br>4x 2,5qmm, JZ-500 | Helukabel GmbH | 602707 | |
| 800 | 2 | M | W4 | flexible control cable, number coded<br>2x 1qmm, OZ-500 | Helukabel GmbH | 602691 | |
| 810 | 1 | pcs. | W5 | cable socket, straigt, M8<br>10m, 4-pole, PVC cable | Pepperl+Fuchs GmbH | 614916 | |

| Pos. | Qty | Unit | Component/ Marking | Description | Manufacturer | Parts-# | |
|---|---|---|---|---|---|---|---|
| 820 | 1 | pcs. | W6 | plug for valves (20x28mm) for MSFG-24-EX<br>type MSSD-F-M16 | Festo KG | 129839 | |
| 830 | 1 | pcs. | W7 | plug for valves (20x28mm) for MSFG-24-EX<br>type MSSD-F-M16 | Festo KG | 129839 | |
| 840 | 1 | pcs. | W8 | plug for valves (20x28mm) for MSFG-24-EX<br>type MSSD-F-M16 | Festo KG | 129839 | |
| 850 | 1 | pcs. | W9 | plug for valves (20x28mm) for MSFG-24-EX<br>type MSSD-F-M16 | Festo KG | 129839 | |
| 860 | 1 | pcs. | W10 | plug for valves (20x28mm) for MSFG-24-EX<br>type MSSD-F-M16 | Festo KG | 129839 | |
| 870 | 1 | pcs. | W11 | plug for valves (20x28mm) for MSFG-24-EX<br>type MSSD-F-M16 | Festo KG | 129839 | |
| 890 | 1 | pcs. | W12 | plug for valves (20x28mm) for MSFG-24-EX<br>type MSSD-F-M16 | Festo KG | 129839 | |
| 900 | 1 | pcs. | W13 | elbow connector plug for proximity switch, M12<br>with cable 10m, 4 cores | Pepperl+Fuchs GmbH | 614700 | |
| 910 | 1 | pcs. | | interlock protection for M12 connector<br>V1-CLIP, category 3G/3D | Pepperl+Fuchs GmbH | 614404 | |
| 920 | 1 | pcs. | W14 | elbow connector plug for proximity switch, M12<br>with cable 10m, 4 cores | Pepperl+Fuchs GmbH | 614700 | |
| 930 | 1 | pcs. | | interlock protection for M12 connector<br>V1-CLIP, category 3G/3D | Pepperl+Fuchs GmbH | 614404 | |
| 940 | 5 | M | W31 | flexible control cable<br>12x 0,75qmm, JZ-500 | Helukabel GmbH | 602696 | |
| 950 | 3 | M | W101 | Steuerleitung, hochflexibel<br>5x 0,75qmm, JZ-HF | Helukabel GmbH | 602721 | |
| 960 | 5 | pcs. | W102 | Customer supply<br>at 11S6 | | - | |
| 970 | 1 | pcs. | X1 | Customer supply<br>600x1400x200mm | | - | |
| 980 | 10 | pcs. | X10 | spring-cage terminal, 2 connections, 0,13-2,5qmm<br>ZDU 2,5-2 | Weidmüller | 614431 | |
| 990 | 3 | pcs. | X10 | ground spring-cage terminal, 2 connections,<br>0,13-2,5qmm; ZPE 2,5-2 | Weidmüller | 614444 | |
| 1000 | 5 | pcs. | X11 | spring-cage terminal, 3 connections, 0,13-2,5qmm<br>ZDU 2,5-2/3AN | Weidmüller | 614433 | |
| 1010 | 5 | pcs. | X12 | spring-cage terminal, 3 connections, 0,13-2,5qmm<br>ZDU 2,5-2/3AN | Weidmüller | 614433 | |
| 1020 | 10 | pcs. | X13 | spring-cage terminal, 3 connections, 0,13-2,5qmm<br>ZDU 2,5-2/3AN | Weidmüller | 614433 | |

# ELECTRIC PARTS LIST 12552

**Project no. 1031529**

Machine Lifter
29.08.2011 / Ver. 3
Name: Harms/Lg

| Pos. | Qty | Unit | Component/ Marking | Description | Manufacturer | Parts-# | |
|---|---|---|---|---|---|---|---|
| 1030 | 3 | pcs. | X14 | double desk earth spring-cage terminal, 2 connect. 0,08-2,5qmm; ZDK 2,5/1,5PE | Weidmüller | 614702 | |
| 1040 | 14 | pcs. | X14 | double desk spring-cage terminal, 2 connections 0,08-2,5qmm; ZDK 2,5/1,5 | Weidmüller | 614498 | |
| 1050 | 7 | pcs. | X15 | distributor block for initiator terminal, blue ZVL 1,5 BL | Weidmüller | 614450 | |
| 1060 | 7 | pcs. | X15 | distributor block for initiator terminal,green/yel ZVL 1,5/PE GN/GE BED | Weidmüller | 614451 | |
| 1070 | 7 | pcs. | X15 | basic element for initiator terminal ZIA 1,5/3L-1S | Weidmüller | 614447 | |
| 1080 | 1 | pcs. | X15 | basic element PE for initiator terminal ZIA 1,5/3L-PE | Weidmüller | 614452 | |
| 1090 | 2 | pcs. | X31 | ground spring-cage terminal, 2 connections, 0,13-2,5qmm; ZPE 2,5-2 | Weidmüller | 614444 | |
| 1100 | 16 | pcs. | X31 | spring-cage terminal, 2 connections, 0,13-2,5qmm ZDU 2,5-2 | Weidmüller | 614431 | |
| 1410 | 1 | pcs. | 7S8 | temperatur switch, IP65 TS-70/X/12 | Hydac/Flutec | 111636 | IP65 |

SERVOLIFT

# Declaration of Conformity for Machinery (Directive 2006/42/EC)

This is to declare that the following listed machinery, on the basis of its design, structure and execution presented by us to trade, conforms to the relevant Essential Health and Safety Requirements of the EC guideline(s).

**With by us non allowed modification of the machinery, this declaration becomes invalid.**

This declaration is only valid for directed use of the machinery by instructed personal.

| | |
|---|---|
| **Type of machine:** | **Machine-Lifter** |
| **Machine number:** | **12552** |
| **Year of construction:** | **2011** |

**Used EC guidelines:**

- EC guidelines of European Machinery Directive 2006/42/EC
- Low Voltage Directive 2006/95/EEC
- EMC correct installation 2004/108/EEC

in case of **explosion proofed** machines refer to and note enclosed

- Declaration of Conformity of EX-proofed guidelines

**Used EN and ISO standards:**

- DIN EN 12100-part 1 and 2; 2003; DIN EN 60204-1; 2006, DIN EN ISO 13849-1; 2007, DIN EN ISO 14121-1; 2007, DIN EN ISO 22915-2; 2008, DIN EN 1175-1; 1998

**Restricted Placing on the market:** We wish to point out, that given declaration is only valid for service performed by us. Service which has to be performed on site is defined by interfaces, to be inspected and confirmed before initial operation.

**Interfaces:** Errection and installation acc. to operation instruction, all interfaces between machine and control cabinet / unit must be installed acc. to electric scheme

Attorney for technical documentation: Servolift GmbH

Servolift GmbH
Albert-Einstein-Str. 9
D- 77656 Offenburg

Telefon : +49 (0) 781/61 00-0
Fax : +49 (0) 781/61 00-99
E-Mail : sl@servolift.de
web : www.servolift.de

| Offenburg 24. Aug. 2011 | Jürgen Rieber, Geschäftsführer | |
|---|---|---|
| Place / Date | Name | Signature |

SERVOLIFT

Appendix to EC declaration of conformity (as defined by the EC Guidelines for Machinery Directive 2006/42/EC, Appendix IIA)

or

Appendix to EC- manufacturer's declaration (as defined by the EC Guidelines for Machinery Directive 2006/42/EC, Appendix IIB)

## EC-Declaration of Conformity

**for Explosion protection guidelines**

Herewith we confirm, that the following product:

| | |
|---|---|
| **Type of machine**: | **Machine-Lifter** |
| **Machine number:** | **12552** |
| **Year of construction:** | **2011** |
| **Category:** | **II3D (Zone 22)** |
| **Marking according to ATEX:** | II3D IP 54 T130°C |
| **Marking of non-electrical equipment:** | c b T1 (max. 450°C) |

**correspond to the following EC-guidelines:**

- Explosion protection guideline 94/9/EC
  The documentation has been given to TÜV Product-Service, München (registration No. 0123) for archiving under registration No. 70039620. Place of archiving: TÜV Product-Service, Gottlieb Daimler Straße 7, D-70794 Filderstadt
- EC Low voltage guideline for electrical equipment installed within non potential explosive area.

**The following standards are fully or partly used (where applicable):**

- EN 1127-1:2007, EN 60079-14:2008, EN 13463-1:2009, EN 13463-5:2003,
- EN 60204-1:2006

**Commissioning is not allowed until machine is proved to correspond to the guideline Directive 2006/42/EC.**

We hereby confirm, that the installation of the electrical equipment is carried out according to the instructions of the manufacturer and of the standard EN 60079-14:2008

**SERVOLIFT GmbH**
Albert-Einstein-Str. 9
D- 77656 Offenburg

Phone : +49 (0) 781/61 00-0
Fax : +49 (0) 781/61 00-99
E-mail : sl@servolift.de
web : www.servolift.de

| Offenburg, den 24. Aug. 2011 | Jürgen Rieber, Geschäftsführer | |
|---|---|---|
| Place / Date | Name | Signature |

# TESTS PROTOCOL

Professional Milling and Handling of Powders

**ATTESTATION DE QUALITÉ**
**QUALITÄTZERTIFIKAT / QUALITY CERTIFICATE**


| Qualité | Qualität | Qualité |
|---|---|---|
| Selon le système de management de la qualité ISO 9001:2000 et 14001:2004 établi dans l'entreprise Frewitt, nous attestons que l'installation à été construite, testée et contrôlée selon les règles de l'art pour assurer la qualité de l'installation et la conformité à la commande. | Gemäss des Qualitätsmanagement-System ISO 9001:2000 und 14001:2004, welches für die Firma Frewitt erstellt wurde, bestätigen wir, dass die Anlage regelrecht konstruiert, getestet und kontrolliert wurde, um die Qualität der Anlage und die Übereinstimmung mit dem Auftrag zu gewährleisten. | According to the system of management of quality ISO 9001:2000 and 14001:2004 established in the company Frewitt, we confirm that the installation has been built, tested and controlled according to the rules of practice to ensure the quality of the installation and its conformity to the order. |

| N° d'enregistrements | Registrier Nr: | Record Numbers |
|---|---|---|
| | ISO 9001 : 02-103-118<br>ISO 14001 : 02-103-523 | |

**Résponsable Qualité** Fabienne Reynaud

| Protocole de test pour l'admission de machines électriques | Pruefprotokoll für die Abnahme von Elektrischen Maschinen | Test protocol for the admission of electrical machines |
|---|---|---|
| Test de la sécurité électrique de l'équipement de machines électriques selon DIN VDE 0113 / EN 60204-1 / IEC 204-1 | Prüfung der elektrischen Sicherheit der Ausrüstung elektrischer Maschinen gemäss DIN VDE 0113 / EN 60204-1 / IEC 204-1 | Test of the electrical security of the equipment of electrical machines according to DIN VDE 0113 / EN 60204-1 / IEC 204-1 |

| Client: | Kunde: | Customer: |
|---|---|---|

**NOVARTIS SINGAPORE PHARMACEUTICAL**

SG-Singapore

| N° de série | Serien-Nr. | Serial Nr. |
|---|---|---|
| | **11007821034** | |

| Appareil de test | Verwendetes Prüfgerät | test unit |
|---|---|---|
| | PROFITEST 204, M 5522 8968 | |
| **Date** | **Datum** | **Date** |
| | **30.08.11** | |
| **Contrôleur** | **Prüfer** | **Inspector** |
| | Christian Reist | |

Ce protocole de test confirme la réalisation adéquate de tous les tests prescrits par les normes susmentionnées lors de la réception de la machine/installation électrique susmentionnée.

Das hier vorliegende Prüfprotokoll bestätigt die sachgemässe Durchführung aller im Rahmen o.g. Normen vorgeschriebener Prüfungen bei der Abnahme o.g. elektrischer Maschine/Anlage.

This test protocol confirms the realisation approbriated to all stipulated norms mentioned above during the reception of the above-mentioned electrical machine/installation.

| Vérification des connections directes de la mise à la terre. | Ueberprüfung der durchgehenden Verbindung des Schutzleiters. | Check of the direct connections of the earth connection | |
|---|---|---|---|
| 2.200E-01 V | 2.220E-02 Ω | 3.000E+01 s | 4.960E-01 Ω |
| 1.800E-01 V | 1.860E-02 Ω | 3.000E+01 s | 4.960E-01 Ω |
| 7.000E-02 V | 7.700E-03 Ω | 3.000E+01 s | 4.960E-01 Ω |
| 7.000E-02 V | 7.600E-03 Ω | 3.000E+01 s | 4.960E-01 Ω |
| 1.300E-01 V | 1.330E-02 Ω | 3.000E+01 s | 4.960E-01 Ω |
| 1.100E-01 V | 1.190E-02 Ω | 3.000E+01 s | 4.960E-01 Ω |
| 1.000E-01 V | 1.050E-02 Ω | 3.000E+01 s | 4.960E-01 Ω |
| 3.700E-01 V | 3.790E-02 Ω | 3.000E+01 s | 4.960E-01 Ω |
| 4.800E-01 V | 4.890E-02 Ω | 3.000E+01 s | 4.960E-01 Ω |
| 3.100E-01 V | 3.110E-02 Ω | 3.000E+01 s | 4.960E-01 Ω |
| 2.200E-01 V | 2.200E-02 Ω | 3.000E+01 s | 4.960E-01 Ω |



Professional Milling and Handling of Powders

| | | | |
|---|---|---|---|
| 2.600E-01 V | 2.650E-02 Ω | 3.000E+01 s | 4.960E-01 Ω |
| 2.500E-01 V | 2.560E-02 Ω | 3.000E+01 s | 4.960E-01 Ω |
| 2.300E-01 V | 2.310E-02 Ω | 3.000E+01 s | 4.960E-01 Ω |
| 2.800E-01 V | 2.880E-02 Ω | 3.000E+01 s | 4.960E-01 Ω |
| 3.800E-01 V | 3.880E-02 Ω | 3.000E+01 s | 4.960E-01 Ω |
| 2.900E-01 V | 2.920E-02 Ω | 3.000E+01 s | 4.960E-01 Ω |
| 2.500E-01 V | 2.520E-02 Ω | 3.000E+01 s | 4.960E-01 Ω |
| 3.000E-01 V | 3.000E-02 Ω | 3.000E+01 s | 4.960E-01 Ω |

Les valeurs limitées ont été respectées à chaque endroit !

An keiner Stelle wurden die Grenzwerte nicht eingehalten !

The limit values have been respected at each place !

**Vérification de la résistance de l'isolation.**

**Ueberprüfung des Isolationswiderstandes.**

**Test of the isolation resistance.**

| | | |
|---|---|---|
| > 3.00E+09 Ω | 1.000E+03 V | 1.000E+09 Ω |
| > 3.00E+09 Ω | 1.000E+03 V | 1.000E+09 Ω |
| > 3.00E+09 Ω | 1.000E+03 V | 1.000E+09 Ω |

Les valeurs limitées ont été respectées à chaque endroit !

An keiner Stelle wurden die Grenzwerte nicht eingehalten !

The limit values have been respected at each place !

**La machine / installation testée remplit les exigences selon**
**DIN VDE 01113 / EN 60204-1 / IEC 204-1**

**Die geprüfte Maschine / Anlage erfüllt die Anforderungen nach**
**DIN VDE 0113 / EN 60204-1 / IEC 204-1**

**The tested machine / installation fulfils the demands according to**
**DIN VDE 01113 / EN 60204-1 / IEC 204-1**

**Frewitt Fabrique de Machines SA**

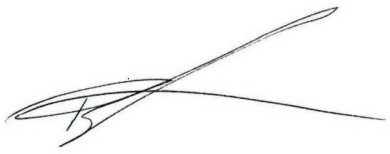

**Christian Reist**
Contrôleur
Prüfer
Inspector

Professional Milling and Handling of Powders

**Manufacturer**

FREWITT Maschinenfabrik AG
Rte du Coteau 7
CH - 1763 Granges-Paccot

**Customer**

Novartis Pharmaceutical
10, Tuas Bay Lane
69115 Singapore

| | |
|---|---|
| **Type** | MF-3 |
| **Project number** | PRO-11-0078 / SG.TBP 202.M.5216 |
| **Order** | CDC-11-0761 / 4500260529 |
| **Novartis Equipment Tag** | SG.TBP.202.M.5216 |

**Pre-Approval:**

**This FAT test Protocol of the equipment was created, reviewed and accepted by:**

| Name | Signature Reason | Function/ Department | Signature | Date |
|---|---|---|---|---|
| Karsten Kutnar | Author | Frewitt Project Manager | | 25. 08. 2011 |
| Yves Grossrieder | Reviewer | Frewitt Technical Project Manager | | 25.08.2011 |
| Rajesh Tralshawala<br>f. TOH SUE-ANN | Reviewer | NSPM Qualification Coordination | | 26 Aug 11 |
| Panicker Shreekumar | Approver | NSPM Process Engineer | | 26 Aug 11 |
| f Shrabalan Karaja<br>Sony Suroso | Approver | NSPM Automation Engineer | | 26 Aug 11 |
| Teo Szu Hui | Approver | NSPM Technical Project Manager | STH | 26 Aug 11 |
| Shrinivas Tata | Approver | NSPM Project QA | | 26 Aug 11 |

| Item | Quantity | Description | Checked and accepted YES | NO |
|---|---|---|---|---|
| 1 | 1 | **Sizing mill FREWITT type MF-3** | | |

**Execution**

| | | | |
|---|---|---|---|
| ATEX execution | Milling chamber: ATEX II 1 G/D<br>Rest of machine: ATEX II 3 D<br>Class of gas: IIB<br>Class of temperature: T4 | | |
| Protection | IP-65 | ☒ | ☐ |
| Product contact parts | stainless steel AISI 316 L,<br>Ra ≤ 0,5 µm, polished and pickled welding seams, sieves made in stainless steel AISI-316<br>Seals made of silicon, PTFE and EPDM | | |
| Other parts | AISI-304, Ra ≤ 1.4 µm (grit 220), brushed and pickled welding seams | ☒ | ☐ |
| Bearings | housing made of of stainless Steel | | |
| Funnels | with endless seal type FEP-O-Seal, fixed by means of screws | | |
| Front door | Special execution reinforced for endless seal. | ☒ | ☐ |

**Basic equipment**

| | | | |
|---|---|---|---|
| Safety device inlet | with magnetic safety switch ELOBAU at inlet to stop the machine if the inlet device is not mounted | ☒ | ☐ |
| Safety device front door | with magnetic safety switch ELOBAU at the front to stop the machine if the front door is not closed | ☒ | ☐ |
| Safety device outlet | with magnetic safety switch ELOBAU at the front to stop the machine if the front door is not closed<br>EE outlet 01.09.17 | ☒ | ☐ |
| Safety device cover inlet | with magnetic safety switch ELOBAU at the front to stop the machine if the front door is not closed<br>EE cover inlet 01.09.17 | ☒ | ☐ |
| Protection | over the motor and drive unit, with ventilation | ☒ | ☐ |

| Item | Quantity | Description | | Checked and accepted YES | NO |
|---|---|---|---|---|---|
| | | Mobile stand for cleaning | square tube, external measurements: 910 x 1092 x H = 845 mm, equipped with a set of castors, 4 mobile castors of which 2 with brake, ∅ 160 mm, in antistatic execution (grey – not marking) | ☒ | ☐ |
| | | **Tools** | | | |
| | | Sieve (1 pce) | N° 408448, MS 0.5 mm x 0.25 mm, round wire | ☒ | ☐ |
| | | Rotor with 5 arms | N° 401402, ∅ 122 mm, | ☒ | ☐ |
| | | **Connection** | | | |
| | | Electrical connection | 3x400V, 3P+T+N, 50 Hz | ☒ | ☐ |
| | | Air | bearing heads foreseen for gas inertisation | ☒ | ☐ |
| | | **Drive unit** | | | |
| | | Motorization | stepless variable drive with motor 1.0 kW with speed adjustment from 43 – 189 osc./min ( max 1m/s). made by means of a mechanical hand wheel, rodding for oscillating movement. | ☒ | ☐ |
| | | **Control** | | | |
| | | Control elements | switches "ON", "OFF" and "EMERGENCY STOP" | ☒ | ☐ |
| | | Cabling | machine supplied with 5 m main cable, with plug | ☒ | ☐ |
| 2 | 1 | **Control system for gas inertisation** mounted in the control box of the machine, with:<br>▪ electropneumatic valve<br>▪ filter<br>▪ pressure sensor<br>▪ pressure reducer for controlling the gas quantity | | ☒ | ☐ |
| 3 | 1 | **Inlet plate N° 465211** Inlet funnel with cover with safety magnetic switch and vibrator | | ☒ | ☐ |
| 4 | 1 | **Outlet funnel N° 465165** Sleeve with height of 160 mm, fitted with a Triclamp connection DN 200 (ISO 2852). Outlet valve 465174 DN200 total height 357 mm. vibrator. | | ☒ | ☐ |

| Item | Quantity | Description | Checked and accepted YES | NO |
|---|---|---|---|---|
| 6 | 1 | **Drum** | | |
| | | Drum D375 70L with cover 461236 | ☒ | ☐ |
| | | Manual valve 438420 | ☒ | ☐ |
| | | Adaptation part for Rubber 461512 | ☒ | ☐ |
| | | Adaptation part for Rubber for IBC 465220 | ☒ | ☐ |
| | | Drum holder with rotation unit 461237 | ☒ | ☐ |
| 7 | 1 | **Lifting tower with 180° rotation for Frewitt mill MF-3** | ☒ | ☐ |
| 8 | 1 | **Mettler Toledo scale** | | |
| | | 1x display panel | ☒ | ☐ |
| 9 | 1 | **Standard operating instructions in English** (1 x in paperform / 1 x on CD-Rom) adapted to the execution of the purchased machine, incl: | | |
| | | - Certificate of surface roughness measured on the basic machine, incl. inlet and outlet funnel (without tools) | ☒ | ☐ |
| | | - FAT IQ/OQ Record (support), incl. | ☒ | ☐ |
| | | - Set of material certificates (3.1) for all contact parts of the machine | ☒ | ☐ |
| 10 | 1 | **Factory Calibration certificates) for MF3** (for critical instrument, if any) | ☒ | ☐ |
| 11 | 1 | Factory Calibration of Mettler scale 02.09.2011 | ☐ | ☒ |

| Name | Signature Reason | Department / Function | Date | Signature |
|---|---|---|---|---|
| Grossrieder Yves | Executed By | Project Manager | 02.09.11 | |
| S Panicker | Reviewed By | P4 Novartis Singapore | 02 Sept 11 | |

**Deficiencies to be remedied:**

- add plug on machine
- change valve in pneumatic 461598-SCH C from 1 to 0,8 bar-g ok 02.05.11
- change side of outlet air Ø8 mm

**Date of delivery:**

Machines: 27.09.2011

Accessories: 11

Documentation: 11

**Issued by:**

FREWITT Fabrique de machines SA
Rte du Coteau 7
CH-1763 Granges-Paccot

**Final Approval**

The Signers confirm the FAT, for the rightness of the included data with their signature. All ascertained critical deviations are adequate documented.

| Name | Signature Reason | Function/ Department | Signature | Date |
|---|---|---|---|---|
| Yves Grossrieder | Reviewer | Frewitt Project Manager | | 02.09.2011 |
| Rajesh Tralshawala | Reviewer | NSPM Qualification Coordinator | | |
| Panicker Shreekumar | Approver | NSPM Process Engineer | | |
| Sony Suroso | Approver | NSPM Automation Engineer | | |
| Teo Szu Hui | Approver | NSPM Technical Project Manager | | |
| Shrinivas Tata | Approver | NSPM Project QA | | |

SERVOLIFT

# Acceptance test protocol

issued: Horst Jekal
tel.: 0781 / 6100-114
fax.: 0781 / 6100-814
e-mail: jekal@servolift.de

**customer:** Frewitt Fabrique, Granges-Paccot, Swiss MV: J-C. Lolivrel

**Serial no.:** 12552 PL: B. Schanz

**Participant:** customer:

Frewitt :

Mr. Grossrieder

Novartis Singapore Pharmaceutical :

Mr. Shreekumar Panicker

**Participant:** Servolift:

Mr. Jekal

**The machine has passed the acceptance test:**

according specification ☐
according to approved drawing ☒

without objection ☐
with the following objection ☒
with the following request of the customer ☒

| **Remarks / Objections** | response. | done |
|---|---|---|
| 1. The hydraulic pressures and the velocities still have to be entered in the machine book. | | |
| 2. E-plan has to be corrected. Because there is no separate operator panel, an emergency stopp is required. | | |
| 3. The pneumatic connection has to be executed at marked positions on the supporting arm. Possibilty of access for Festo-conduct (Ø 8mm) has to be made. | | |
| 4. The positioning of the Frewitt shall be welded on SL site. | | |
| 5. Provide packaging for air freight. | | |
| 6. | | |
| 7. | | |
| 8. | | |
| 9. | | |
| 10. | | |
| 11. | | |

Zunsweier, 31.08.2011
place, date

Jekal
name in block letters (Servolift)

i.V. Jekal
signature (Servolift)

Grossrieder Yves
name in block letters (customer)

signature (customer)

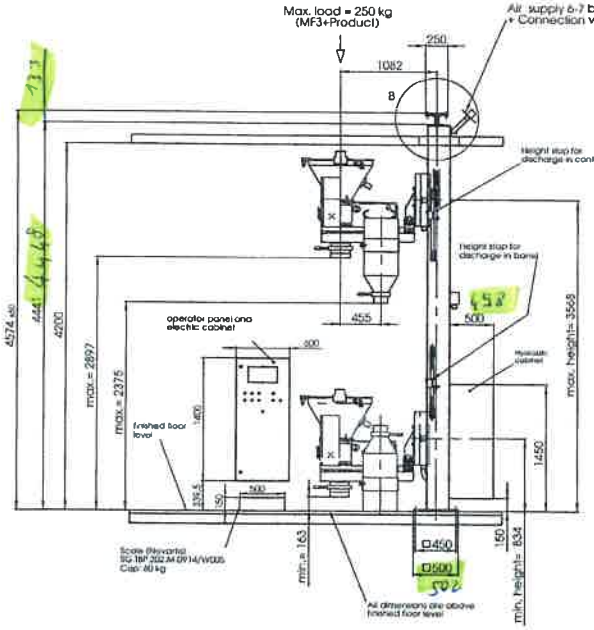


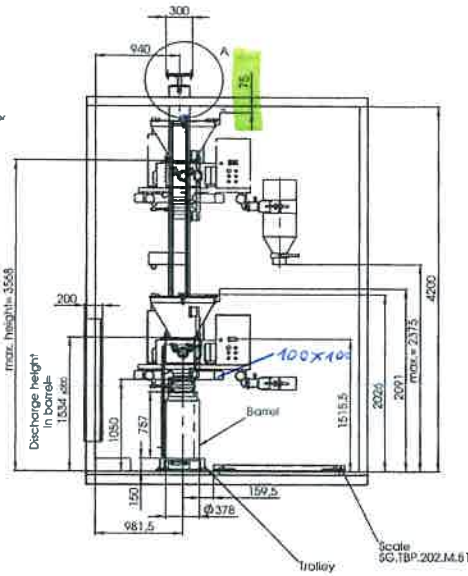


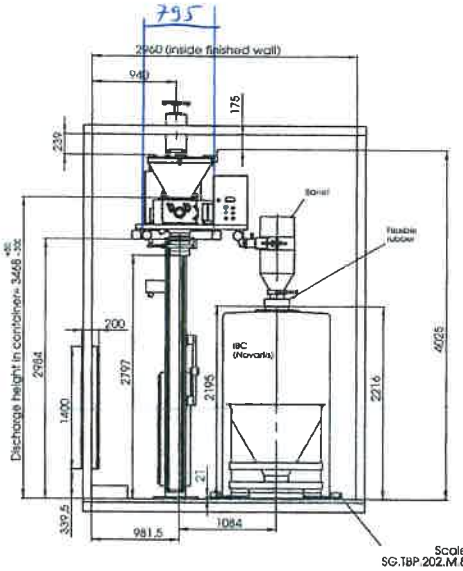


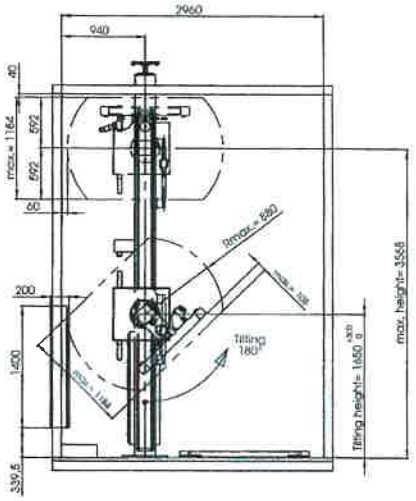


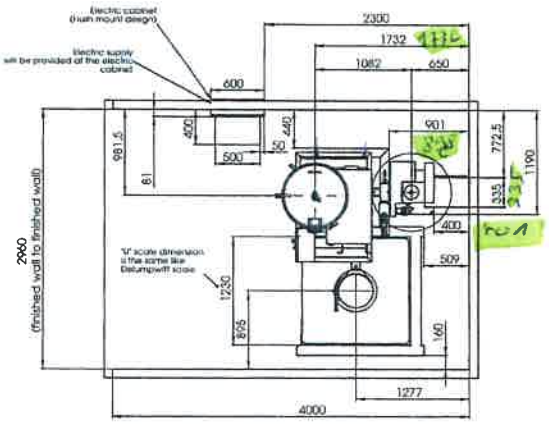


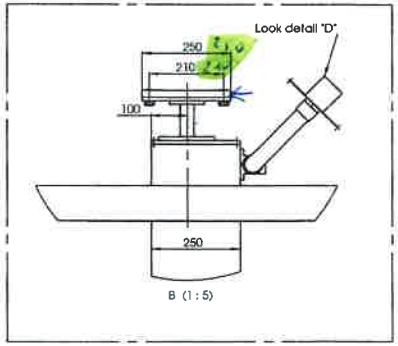


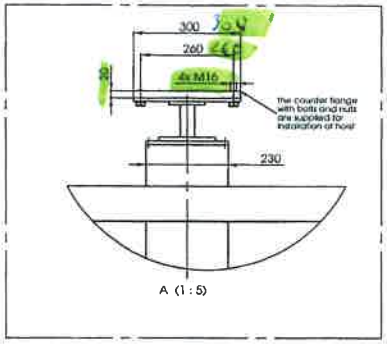


**General notes:**
1. Material of construction:
-Product contact parts AISI 316/316L
-Non-product contact parts AISI 304/304L
2. Surface finish:
-Product contact part < Ra 0,4
-Non-product contact parts < Ra 1,4
3. All non-metallic parts in contact with product shall be FDA approved food grad
4. Design fabrication shall comply with GMP requirement with no sharp corners, dead legs, easily drainable and crevices free.

**SG.TBP.202.M.5216 &**
**SG.TBP.202.M.5216 / C001**
**Total installed empty weight= 1500 kg**
**Total operating weight: 2600 kg**

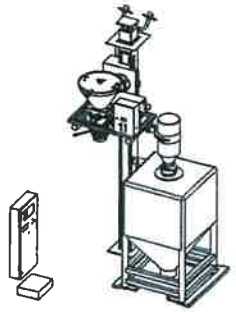

Equipement TAG: SG.TBP.202.M.5216/C001

| Code | Description | Tick as applicable with Initial & date | |
|---|---|---|---|
| Code 1 | REJECTED | | |
| Code 2 | Comments as indicated: Revised and resubmit. Work may not proceed | | |
| Code 3 | Approved with Comments. Work may proceed subject to incorporation of comments | | |
| Code 4 | FINAL | ✓ | 8/4/11 |

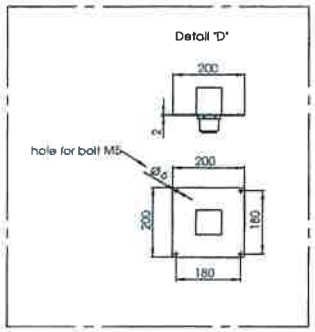


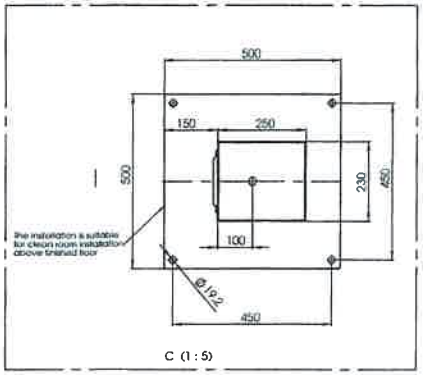


SERVOLIFT

Maschinen-Hubtische
Post Hoist For Mill MF3

12552-00-001

# QUALIFICATION AND VALIDATION

Professional Milling and Handling of Powders

# FAT IQ Test Protocol

## SG.TBP.202.M.5216

## Mill MF-3



Frewitt SA
Route du Coteau 7
CH-1763 Granges-Paccot
Switzerland

Postal address:
Box 615
CH-1701 Fribourg
Switzerland

info@frewitt.com
www.frewitt.com
P +41(0)26 460 74 00
F +41(0)26 460 74 59

No. TVA 489 197
IBAN EUR: CH90 0483 5036 3818 0200 0
IBAN CHF: CH27 0483 5036 3818 0100 0
Credit Suisse CH-3001 Bern/Swift CRESCH ZZ30 R

Professional Milling and Handling of Powders

| | |
|---|---|
| **Project Name :** | **Novartis** Singapore, MF-3 |
| **Client :** | NOVARTIS SINGAPORE PHARMACEUTICAL |
| **Location :** | SG-Singapore |
| **Customer Order # :** | 4500260529 |
| **Supplier :** | Frewitt Fabrique de Machines S.A. |
| **Object :** | MF-3 |
| **Serial # :** | 11007821034 |

| | |
|---|---|
| **Document Name :** | Qualification IQ MF-3 11007821034 |
| **Document Reference :** | 135386-en.doc |
| **Document Version # :** | 01 |

**Pre-Approval:**

**This FAT-IQ test Protocol of the equipment was created, reviewed and accepted by:**

| Name | Signature Reason | Function/ Depart-ment | Signature | Date |
|---|---|---|---|---|
| Karsten Kutnar | Author | Frewitt Project Manager | | 25.08.2011 |
| Yves Grossrieder | Reviewer | Frewitt Project Manager | | 25.08.2011 |
| Rajesh Tralshawala | Reviewer | NSPM Qualification Coordinator | | |
| Panicker Shreekumar | Approver | NSPM Process Engineer | | |
| Sony Suroso | Approver | NSPM Automation Engineer | | |
| Teo Szu Hui | Approver | NSPM Technical Project Manager | | |
| Shrinivas Tata | Approver | NSPM Project QA | | |



Frewitt SA
Route du Coteau 7
CH-1763 Granges-Paccot
Switzerland

Postal address:
Box 615
CH-1701 Fribourg
Switzerland

info@frewitt.com
www.frewitt.com
P +41(0)26 460 74 00
F +41(0)26 460 74 59

No. TVA 489 197
IBAN EUR: CH90 0483 5036 3818 0200 0
IBAN CHF: CH27 0483 5036 3818 0100 0
Credit Suisse CH-3001 Bern/Swift CRESCH ZZ30 R

FREWITT

| | |
|---|---|
| **Project Name :** | **Novartis** Singapore, MF-3 |
| **Client :** | NOVARTIS SINGAPORE PHARMACEUTICAL |
| **Location :** | SG-Singapore |
| **Customer Order # :** | 4500260529 |
| **Supplier :** | Frewitt Fabrique de Machines S.A. |
| **Object :** | MF-3 |
| **Serial # :** | 11007821034 |

| | |
|---|---|
| **Document Name :** | Qualification IQ MF-3 11007821034 |
| **Document Reference :** | 135386-en.doc |
| **Document Version # :** | 01 |

**Pre-Approval:**

**This FAT-IQ test Protocol of the equipment was created, reviewed and accepted by:**

| Name | Signature Reason | Function/ Depart-ment | Signature | Date |
|---|---|---|---|---|
| Karsten Kutnar | Author | Frewitt Project Manager | | 25.08.2011 |
| Yves Grossrieder | Reviewer | Frewitt Project Manager | | 25.08.2011 |
| Rajesh Tralshawala<br>+ TOH SUE-ANN | Reviewer | NSPM Qualification Coordinator | | 26 Aug 11 |
| Panicker Shreekumar | Approver | NSPM Process Engineer | | 26 Aug 11 |
| + Shrinivas Tata<br>Sony Suroso | Approver | NSPM Automation Engineer | | 26 Aug 11 |
| Teo Szu Hui | Approver | NSPM Technical Project Manager | SH | 26 Aug 11 |
| Shrinivas Tata | Approver | NSPM Project QA | | 26 Aug 11 |



Frewitt SA
Route du Coteau 7
CH-1763 Granges-Paccot
Switzerland

Postal address
Box 615
CH-1701 Fribourg
Switzerland

info@frewitt.com
www.frewitt.com
P +41(0)26 460 74 00
F +41(0)26 460 74 59

No. TVA 469 197
IBAN EUR: CH80 0483 5036 3816 0200 6
IBAN CHF: CH27 0483 5036 3816 0100 6
Credit Suisse CH-3001 Bern / Swift CRESCH ZZ30 H

## 1. Contents List

1.IQ - Contents List ..... 3
2. General tests ..... 4
3. Tools ..... 6
4. Inlet and Outlet Accessories ..... 7
5. Motorisation ..... 8
6. Energies connections ..... 9
7. Documentation ..... 10
8. Miscellaneous ..... 11



Frewitt SA
Route du Coteau 7
CH-1763 Granges-Paccot
Switzerland

Postal address:
Box 615
CH-1701 Fribourg
Switzerland

info@frewitt.com
www.frewitt.com
P + 41(0)26 460 74 00
F + 41(0)26 460 74 59

No. TVA 489 197
IBAN EUR: CH90 0483 5036 3818 0200 0
IBAN CHF: CH27 0483 5036 3818 0100 0
Credit Suisse CH-3001 Bern/Swift CRESCH ZZ30 R

Professional Milling and Handling of Powders

FREWITT

## 2. General tests

| Test No. | Test Description | Expected Result / Acceptance Criteria | Actual Results | Fulfilled (Y/N) | Deviation No. | Executed by : (Initial, Date) |
|---|---|---|---|---|---|---|
| 2.1 | Visible transport-related damage | No visible signs of impacts | NO signs of impact. | Y | NA | 01 Sept 11 |
| 2.2 | User access to machine | There must be enough space around the machine to allow access to the control panel, accessories and tooling systems for normal operation of the machine. For units installed as permanent fixtures, there must also be enough room around the machine to allow maintenance work to be carried out | Enough space to access control panel. Will be checked during SAT. | Y | NA | 01 Sept 11 |
| 2.3 | Machine dimensions Item # : 465036-LAY/ 465107-LAY | As per layout diagram. Verify all components properly installed as per approved GA drawing. Verify all instruments as per approved P&ID Verify tags for all instruments & components. | Machine dimensions checked as per Item 465036 and lay 465107 and PID Version 465041 C ★ Ref. Attach 1, 2, 3 | Y | N. A | 01 Sept 11 |
| 2.4 | Metallic material in contact with product Item # : 465036-CMA/ 465107-CMA | Stainless steel AISI-316 / AISI-316L Test report as per EN 10204-2.2 included in manual. Materials certificate as per EN 10204-3.1 included in manual Surface finish Verify w.r.t. each component as per parts/components list & provide correct reference to certificate. | Stainless steel AISI-316/AISI-316L Materials certificate as per EN10204-3.1 included in section 11 of PRC-II-0078. Surface finish certificate is included in Section 11 of PRC-II-0078. | Y | N.A. | 02 Sep 2011 |

★ Approved version of PID was 465041 B. But Frewitt added a safety switch & so revised to rev C.



Frewitt SA
Route du Coteau 7
CH-1763 Granges-Paccot
Switzerland

Postal address:
Box 615
CH-1701 Fribourg
Switzerland

info@frewitt.com
www.frewitt.com
P +41(0)26 460 74 00
F +41(0)26 460 74 59

No. TVA 489 197
IBAN EUR: CH90 0483 5036 3818 0200 0
IBAN CHF: CH27 0483 5036 3818 0100 0
Credit Suisse CH-3001 Bern / Swift CRESCH ZZ30 R

* Materials shall be FDA compliant and suitable for pharmaceutical applications. fk 02 Sep 2

| Test No. | Test Description | Expected Result / Acceptance Criteria | Actual Results | Fulfilled (Y/N) | Deviation No. | Executed by : (Initial, Date) |
|---|---|---|---|---|---|---|
| 2.5 | Non-metallic material in contact with product Item # : 465036-CMA/ 465107-CMA | Stainless steel AISI-316 / AISI-316L Test report as per EN 10204-2.2 included in manual. Materials certificate as per EN 10204-3.1 included in manual. * fk 02 Sep 11 | FDA compliant certificates are filed in section 11 of Frewitt MF-3 PRO-11-0078 | Y | 1 | fk 02 Sep 2011 |
| 2.6 | Drive Types Item#: 429599 | Oscillating Rotor (Look inside the motor safety guard. If you see a belt, the machine has a rotary rotor, otherwise it has an oscillating rotor) | No Belt inside. The mlc has a oscillating rotor | Y | NA | 01 Sept 11 |
| | | Verification of rotor oscillating range 43-189 osc/min +/- 5% in OQ. Calibration Certificate. | The range is 43 -189 osc/min Ref- to Sec 11 02 Sept 11 | Y | NA | 01 Sept 11 |



Frewitt SA
Route du Coteau 7
CH-1763 Granges-Paccot
Switzerland

Postal address:
Box 615
CH-1701 Fribourg
Switzerland

info@frewitt.com
www.frewitt.com
P +41(0)26 460 74 00
F +41(0)26 460 74 59

No. TVA 489 197
IBAN EUR: CH90 0483 5036 3818 0200 0
IBAN CHF: CH27 0483 5036 3818 0100 0
Credit Suisse CH-3001 Bern/Swift CRESCH ZZ30 R

Professional Milling and Handling of Powders

FREWITT

## 3. Tools

| Test No. | Test Description | Expected Result / Acceptance Criteria | Actual Results | Fulfilled (Y/N) | Deviation No. | Executed by : (Initial, Date) |
|---|---|---|---|---|---|---|
| 3.1 | Rotor<br>Item#: 401402 | Stainless steel AISI-316L<br>Certificate to be attached<br><br>Rotor with 5 arms, ø<br><br>122 mm, welding cleaned with acid. | Stainless steel AISI-316L. Certificate attached in Section 11 of PRO-11-0078<br>Rotor has 5 arms with 122 mm ø. cleaning done | Y<br><br>Y | N.A.<br><br>NA | fk 02 Sep 11<br><br>01 Sept 11 |
| 3.2 | Sieve tensioning bars<br>Item#: 417089 | Stainless steel AISI-316L<br>Certificate to be attached<br>Permitting the adjustment of the distance between rotor and sieve | Stainless steel AISI-316L Certificate attached in Section 11 of PRO-11-0078.<br>The distance can be adjusted | Y<br><br>Y | N.A.<br><br>NA | fk 02 Sep 2011<br><br>01 Sept 11 |
| 3.3 | Sieve-G OM<br>0.50x0.35mm<br>Item #:408448 | Stainless steel AISI-316L<br>Certificate to be attached or verified in manual.<br>Round wire<br>On direct tension system<br>Round wire, with rubber edges, to be mounted directly in the machine (without rigid screen support)<br>Verify Sieve Identification | Stainless steel AISI-316L See drawing 20220. Certificate attached in section 11 of PRO-11-0078<br>Round wire with rubber Edges w/o rigid screen. Sieve Identification available | Y<br><br>Y | N.A.<br><br>NA | fk 02 Sep 2011<br><br>01 Sept 11 |



Frewitt SA
Route du Coteau 7
CH-1763 Granges-Paccot
Switzerland

Postal address:
Box 615
CH-1701 Fribourg
Switzerland

info@frewitt.com
www.frewitt.com
P +41(0)26 460 74 00
F +41(0)26 460 74 59

No. TVA 489 197
IBAN EUR: CH90 0483 5036 3818 0200 0
IBAN CHF: CH27 0483 5036 3818 0100 0
Credit Suisse CH-3001 Bern/Swift CRESCH ZZ30 R

## 4. Inlet and Outlet Accessories

| Test No. | Test Description | Expected Result / Acceptance Criteria | Actual Results | Fulfilled (Y/N) | Deviation No. | Executed by : (Initial, Date) |
|---|---|---|---|---|---|---|
| 4.1 | Inlet funnel Item#: 465220 | Stainless steel AISI-316L Certificate to be attached or verified in manual. Mounting on the inlet flange of the machine by means of fixing screws. **Inlet funnel** for container BS10", H78.5, col 8, Ra 0.4 | Stainless Steel AISI-316L Certificate attached in section 11 of PRO-11-0078. Mounting on inlet flange by triclamp Funnel S13C BS10". Ht 78.5, collar 6mm | Y<br>Y | N.A.<br>N.A | fr 02 Sep 11<br>01 Sept 11 |
| 4.2 | Inlet funnel Item#: 465211 | Stainless steel AISI-316L Certificate to be attached or verified in manual. Mounting on the inlet flange of the machine by means of fixing screws. Cover, Elobau, without security grill | Stainless Steel AISI-316L Certificate attached in section 11 of PRO-11-0078 Inlet flange fixed by screws without security grill | Y<br>Y | N.A.<br>N.A | fr 02 Sep 2011<br>01 Sept 11 |
| 4.3 | Outlet funnel Item#: 465165 | Stainless steel AISI-316L Certificate to be attached or verified in manual. Mounting on the outlet flange of the machine by means of fixing screws. DN200 ISO Tri , ml | Stainless Steel AISI-316L Certificate attached in section 11 of PRO-11-0078 Outlet Flange connected by screws DN200 Tri clamp | Y<br>Y | N.A.<br>N.A | fr 02 Sep 2011<br>01 Sept 11 |
| 4.4 | Outlet funnel Item#: 465173 | Stainless steel AISI-316L Certificate to be attached or verified in manual. Mounting on the outlet flange of the machine by means of fixing screws. DN200 x160 Tri | Stainless Steel AISI-316L Certificate attached in section 11 of PRO-11-0078 Mounting of flange by means of firmy screws and DN200 Tri | Y<br>Y | N.A.<br>N.A | fr 02 Sep 2011<br>01 Sept 11 |



Frewitt SA
Route du Coteau 7
CH-1763 Granges-Paccot
Switzerland

Postal address:
Box 615
CH-1701 Fribourg
Switzerland

info@frewitt.com
www.frewitt.com
P +41(0)26 460 74 00
F +41(0)26 460 74 59

No. TVA 489 197
IBAN EUR: CH90 0483 5036 3818 0200 0
IBAN CHF: CH27 0483 5036 3818 0100 0
Credit Suisse CH-3001 Bern/Swift CRESCH ZZ30 R

Professional Milling and Handling of Powders

FREWITT

## 5. Motorisation

| Test No. | Test Description | Expected Result / Acceptance Criteria | Actual Results | Fulfilled (Y/N) | Deviation No. | Executed by : (Initial, Date) |
|---|---|---|---|---|---|---|
| 5.1 | Motor Item#: 461222 | Motor 4P LSPX90S 1.0kW Ex II2D Ex tD A21 IP65 T125°C B14 230VD/400VY 50Hz VMA31T | Refer section 10 of Yandorda | Y | N:A | [signature] 02 Sept 11 |
| 5.2 | Gear motor Item#: 436111 | Gear motor LENZE GSS04-2NVBR/1D 1410/156 t/m, i=9,8, IMB14, 60Nm | Refer section 10 of Yandorda | Y | N:A | [signature] 02 Sept 11 |



Frewitt SA
Route du Coteau 7
CH-1763 Granges-Paccot
Switzerland

Postal address:
Box 615
CH-1701 Fribourg
Switzerland

info@frewitt.com
www.frewitt.com
P +41(0)26 460 74 00
F +41(0)26 460 74 59

No. TVA 489 197
IBAN EUR: CH90 0483 5036 3818 0200 0
IBAN CHF: CH27 0483 5036 3818 0100 0
Credit Suisse CH-3001 Bern / Swift CRESCH ZZ30 R

## 6. Energies connections

| Test No. | Test Description | Expected Result / Acceptance Criteria | Actual Results | Fulfilled (Y/N) | Deviation No. | Executed by : (Initial, Date) |
|---|---|---|---|---|---|---|
| 6.1 | Electrical connections Item#: 465085 | As per circuit diagram. Attach the verified drawing. | checked and Attached sub dwg | Y | NA | 01 Sept 11 |
| 6.2 | Pneumatic connections Item#: 461598 | As per pneumatic diagram. Attach the verified drawing. | Checked as per 461598 - sch. | Y | NA | 01 Sept 11 |



Frewitt SA
Route du Coteau 7
CH-1763 Granges-Paccot
Switzerland

Postal address:
Box 615
CH-1701 Fribourg
Switzerland

info@frewitt.com
www.frewitt.com
P +41(0)26 460 74 00
F +41(0)26 460 74 59

No. TVA 489 197
IBAN EUR: CH90 0483 5036 3818 0200 0
IBAN CHF: CH27 0483 5036 3818 0100 0
Credit Suisse CH-3001 Bern / Swift CRESCH ZZ30 R

Professional Milling and Handling of Powders

FREWITT

## 7. Documentation

| Test No. | Test Description | Expected Result / Acceptance Criteria | Actual Results | Fulfilled (Y/N) | Deviation No. | Executed by : (Initial, Date) |
|---|---|---|---|---|---|---|
| 7.1 | Manual Contents | Check that the following documents are present: | | | | |
| 7.1.1 | Index | Document present | Present | Y | N.A. | fle 30 Aug 2011 |
| 7.1.2 | Overview | Document present | Present | Y | N.A. | fle 30 Aug 2011 |
| 7.1.3 | Safety | Document present | Present | Y | N.A | fle 30 Aug 2011 |
| 7.1.4 | Initial Start-up | Document present | Present | Y | N.A. | fle 30 Aug 2011 |
| 7.1.5 | Operating instructions | Document present | Present | Y | N.A. | fle 30 Aug 2011 |
| 7.1.6 | Cleaning | Document present | Present | Y | N.A. | fle 30 Aug 2011 |
| 7.1.7 | Maintenance and support | Document present | Present | Y | N.A | fle 01 Sept 11 |
| 7.1.8 | Spare parts | Document present | Present | Y | N.A | fle 01 Sept 11 |
| 7.1.9 | Tools | Document present | Present | Y | N.A. | fle 30 Aug 2011 |
| 7.1.10 | Electrical / drive / pneumatic | Document present | Present | Y | N.A | fle 01 Sept 11 |
| 7.1.11 | Certificates | Document present | Present | Y | N.A | fle 01 Sept 11 |
| 7.1.12 | ATEX certificates | Document present | Present | Y | N.A | fle 01 Sept 11 |
| 7.1.13 | Test protocols | Document present | Present | Y | N.A | fle 01 Sept 11 |
| 7.1.14 | Qualification IQ / OQ | Document present | Present | Y | N.A | fle 01 Sept 11 |
| 7.3 | Factory calibration certificate | Check calibration certificate for all instruments present | For speed certificate Present | Y | N.A. | fle 01 Sept 11 |
| 7.4 | Lubrication | Verififcation if any | Lubrication certificates are filed in section 11 of Frewitt PRO-11-0078 MF-3 binder. | Y | N.A. | fle 30 Aug 2011 |



Frewitt SA
Route du Coteau 7
CH-1763 Granges-Paccot
Switzerland

Postal address:
Box 615
CH-1701 Fribourg
Switzerland

info@frewitt.com
www.frewitt.com
P +41(0)26 460 74 00
F +41(0)26 460 74 59

No. TVA 489 197
IBAN EUR: CH90 0483 5036 3818 0200 0
IBAN CHF: CH27 0483 5036 3818 0100 0
Credit Suisse CH-3001 Bern/Swift CRESCH ZZ30 R

## 8. Miscellaneous

| Test No. | Test Description | Expected Result / Acceptance Criteria | Actual Results | Fulfilled (Y/N) | Deviation No. | Executed by : (Initial, Date) |
|---|---|---|---|---|---|---|
| 8.1 | Bearing Flushiing (air purge) & Compressed air filter | Verification with certificate | Verified Refer from 11 | Y | NA | 02 Sept 11 |
| 8.2 | Component list | Verification | Refer Vendor Sec 8 | Y | NA | 02 Sept 11 |
| 8.3 | Weigh scale range | Verification with calibration certificate | Not available | N | -12 | 01 Sept 11 |
| 8.4 | IBC (2000L) | Docking/undocking of IBC with proper grounding | Will be tested during SAT | N | 3 | 02 Sept 11 |
| 8.5 | IBC (750L) | Docking/undocking of IBC with proper grounding | Will be tested during SAT | N | 3 | 02 Sept 11 |
| 8.6 | Small Drum Bracket | Verify installed bracket for small drum & swiveling | Verified Installation & Swivelling | Y | NA | 01 Sept 11 |
| 8.7 | Floor Scale cable routing | Routing through lifter column | Will be Tested in SAT during Assembly | Y provided | NA | 02 Sept 11 |
| 8.8 | Mill trolley Suitability | Suitable for installation & uninstallation | Suitable for installation and uninstallation | Y | NA | 01 Sept 11 |



Frewitt SA
Route du Coteau 7
CH-1763 Granges-Paccot
Switzerland

Postal address:
Box 615
CH-1701 Fribourg
Switzerland

info@frewitt.com
www.frewitt.com
P +41(0)26 460 74 00
F +41(0)26 460 74 59

No. TVA 489 197
IBAN EUR: CH90 0483 5036 3818 0200 0
IBAN CHF: CH27 0483 5036 3818 0100 0
Credit Suisse CH-3001 Bern/Swift CRESCH ZZ30 R

Professional Milling and Handling of Powders

FREWITT

## 9. Attachments

| Attachment No. | Description | No. of Pages |
|---|---|---|
| 1. | Layout: 465036 Ver C | 1 |
| 2. | Layout: 465107 Ver B | 1 |
| 3. | P I D: 465041 Ver B / Ver C | 2 |
| 4 | Pneumatic schematic diagram | 1 |
| 5 | Electrical wiring diagram | 19 |
| | | |
| | | |
| | | |
| | | |
| | | |
| | | |
| | | |
| | | |
| | | |
| | | |
| | | |
| | | |
| | | |
| | | |
| | | |
| | | |
| | | |



Frewitt SA
Route du Coteau 7
CH-1763 Granges-Paccot
Switzerland

Postal address:
Box 615
CH-1701 Fribourg
Switzerland

info@frewitt.com
www.frewitt.com
P +41(0)26 460 74 00
F +41(0)26 460 74 59

No. TVA 489 197
IBAN EUR: CH90 0483 5036 3818 0200 0
IBAN CHF: CH27 0483 5036 3818 0100 0
Credit Suisse CH-3001 Bern/Swift CRESCH ZZ30 R

## 9. IQ – Conclusion

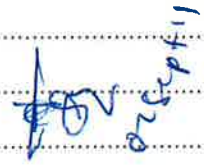



Frewitt SA
Route du Coteau 7
CH-1763 Granges-Paccot
Switzerland

Postal address:
Box 615
CH-1701 Fribourg
Switzerland

info@frewitt.com
www.frewitt.com
P +41(0)26 460 74 00
F +41(0)26 460 74 59

No. TVA 489 197
IBAN EUR: CH90 0483 5036 3818 0200 0
IBAN CHF: CH27 0483 5036 3818 0100 0
Credit Suisse CH-3001 Bern/Swift CRESCH ZZ30 R

Professional Milling and Handling of Powders

FREWITT

## 10. Deviations

| | |
|---|---|
| **Deviation 1 To Test No:** 2.5 | Non-metallic material in contact with product item #: 46503.6-CMA / 46510.7-CMA |

**Description of Deviation**

The expected result/acceptance criteria is a typographical error for non-metallic material.

**Evaluation and Proposed Corrective Action**

The correct expected result/acceptance criteria for non-metallic material in contact with product should be "Materials shall be FDA compliant and suitable for pharmaceutical applications" as per SG.TBP.202.M.5200-URS rev. 10.

**Resolution**

The wrong expected result is crossed out and the correct acceptance criteria stated in test no. 2.5.

**Deviation Prepared By**

| Name | Signature Reason | Department / Function | Date | Signature |
|---|---|---|---|---|
| Fanny Koh | Author | Qualification coordinator | 02 Sep 2011 | |

**Deviation Accepted By**

| Name | Signature Reason | Department / Function | Date | Signature |
|---|---|---|---|---|
| | Approver | | | |



Frewitt SA
Route du Coteau 7
CH-1763 Granges-Paccot
Switzerland

Postal address:
Box 615
CH-1701 Fribourg
Switzerland

info@frewitt.com
www.frewitt.com
P +41(0)26 460 74 00
F +41(0)26 460 74 59

No. TVA 489 197
IBAN EUR: CH90 0483 5036 3818 0200 0
IBAN CHF: CH27 0483 5036 3818 0100 0
Credit Suisse CH-3001 Bern / Swift CRESCH ZZ30 R

FREWITT

## 10. Deviations

| Deviation 2 To Test No: 8-2 | |
|---|---|
| **Description of Deviation** No factory certificate available for the weighing scale | |
| **Evaluation and Proposed Corrective Action** Frewitt will supply the certificate | |
| **Resolution** | |

**Deviation Prepared By**

| Name | Signature Reason | Department / Function | Date | Signature |
|---|---|---|---|---|
| S. Panicker | Author | PM | 02 Sept 11 | [signature] |

**Deviation Accepted By**

| Name | Signature Reason | Department / Function | Date | Signature |
|---|---|---|---|---|
| | Approver | | | |



Frewitt SA
Route du Coteau 7
CH-1783 Granges Paccot
Switzerland

Postal address
BOX 65
CH-1701 Fribourg
Switzerland

info@frewitt.com
www.frewitt.com
P +41 (0)26 460 24 00
F +41 (0)26 460 24 50

No. TVA 389 193
IBAN EUR CH80 0483 5026 3818 0200 0
IBAN CHF CH27 0483 5026 3818 0100 0
Credit Suisse CH-3001 Bern (Swift CRESCH ZZ80 B

FREWITT

## 10. Deviations

| Deviation 3 To Test No: 8.4/8.5 | |
|---|---|
| **Description of Deviation** | As the FSV Itr IBC and servolift not on site the ducking cannot be tested for MF3 |
| **Evaluation and Proposed Corrective Action** | This will be tested during ~~FAT~~ SAT. 02 Sept 11 |
| **Resolution** | |

**Deviation Prepared By**

| Name | Signature Reason | Department / Function | Date | Signature |
|---|---|---|---|---|
| S Panicker | Author | PM | 02Sept11 | |

**Deviation Accepted By**

| Name | Signature Reason | Department / Function | Date | Signature |
|---|---|---|---|---|
| | Approver | | | |



Professional Milling and Handling of Powders

## 11 Post Approval

This FAT-OQ test Protocol of the equipment has been executed and accepted by

| Name | Signature Reason | Function/ Depart-ment | Signature | Date |
|---|---|---|---|---|
| Yves Grossrieder | Reviewer | Frewitt Project Manager | | 02.09.2011 |
| Rajesh Tralshawala | Reviewer | NSPM Qualification Coordinator | | |
| Panicker Shreekumar | Approver | NSPM Process Engineer | | |
| Sony Suroso | Approver | NSPM Automation Engineer | | |
| Teo Szu Hui | Approver | NSPM Technical Project Manager | | |
| Shrinivas Tata | Approver | NSPM Project QA | | |



Frewitt SA
Route du Coteau 7
CH-1763 Granges-Paccot
Switzerland

Postal address:
Box 615
CH-1701 Fribourg
Switzerland

info@frewitt.com
www.frewitt.com
P +41(0)26 460 74 00
F +41(0)26 460 74 59

No. TVA 489 197
IBAN EUR: CH90 0483 5036 3818 0200 0
IBAN CHF: CH27 0483 5036 3818 0100 0
Credit Suisse CH-3001 Bern/Swift CRESCH ZZ30 R

Professional Milling and Handling of Powders

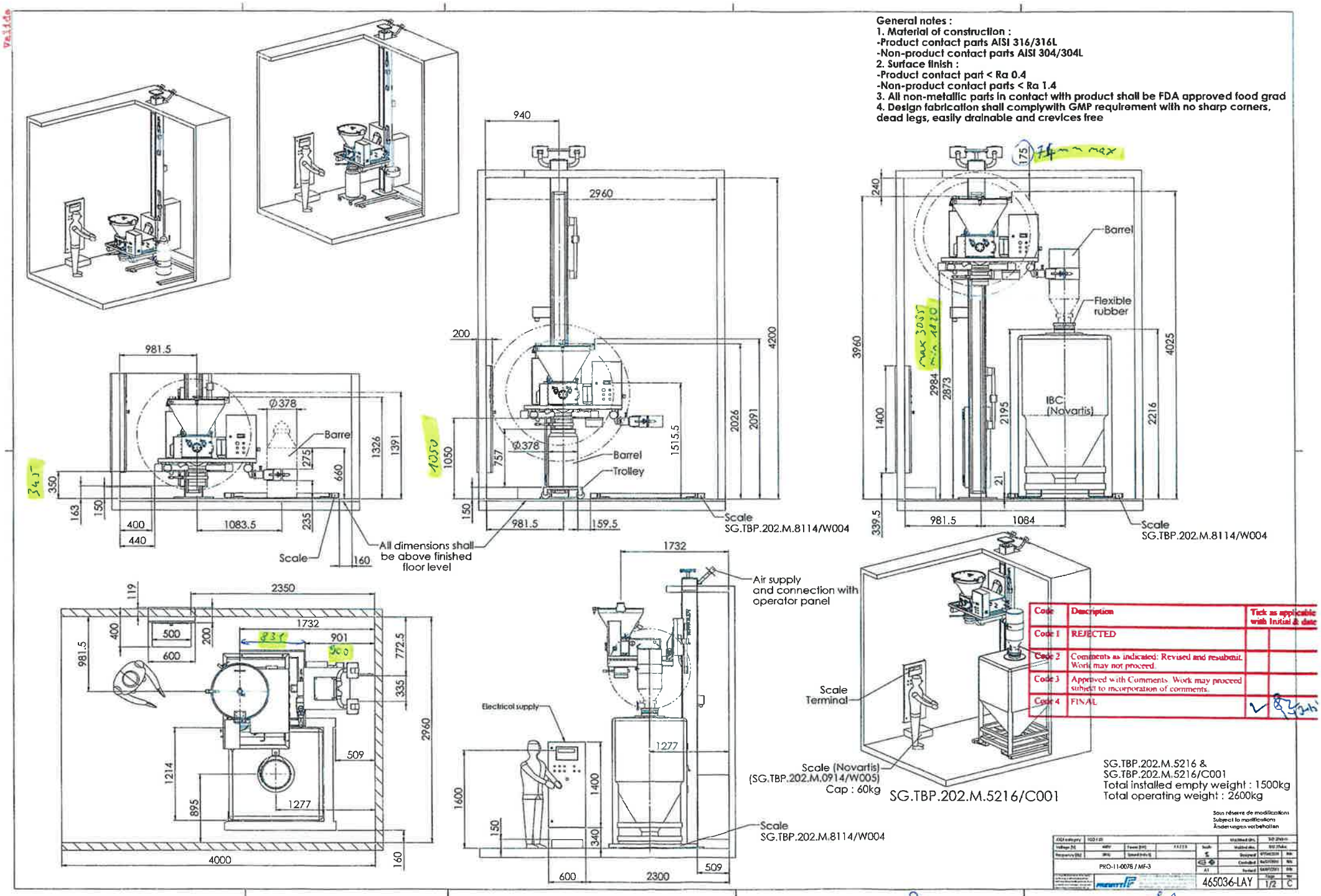


| Code | Description | Tick as applicable with Initial & date |
|---|---|---|
| Code 1 | REJECTED | |
| Code 2 | Comments as indicated: Revised and resubmit. Work may not proceed. | |
| Code 3 | Approved with Comments. Work may proceed subject to incorporation of comments. | |
| Code 4 | FINAL | ✓ |

Attachment 1
Attached to 135386 En Vol 11
01 Sept 11
Page 1 of 1

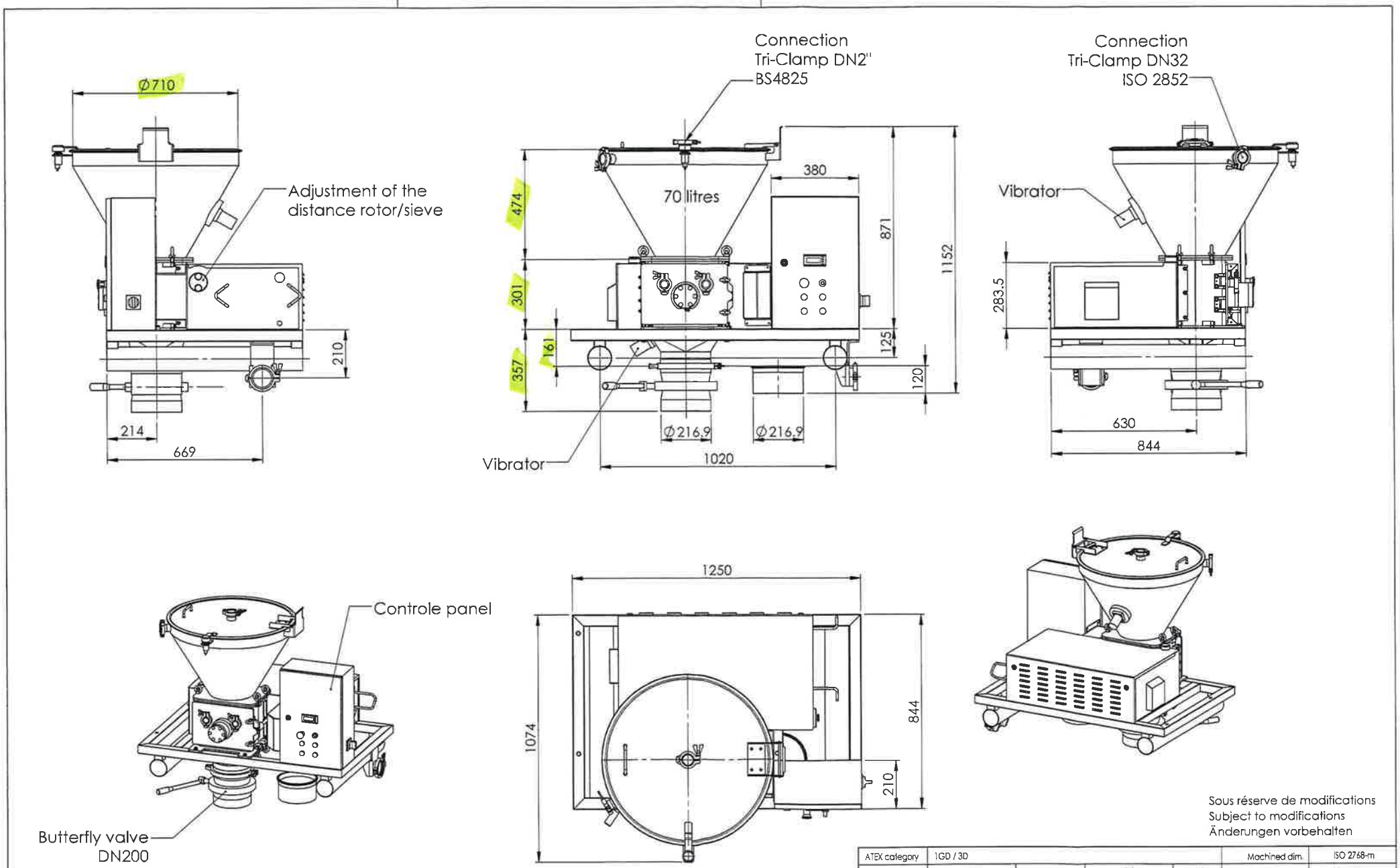


Sous réserve de modifications
Subject to modifications
Änderungen vorbehalten

| | | | | | | | |
|---|---|---|---|---|---|---|---|
| ATEX category | 1GD / 3D | | | | Machined dim. | ISO 2768-m | |
| Voltage [V] | 400 | Power [kW] | 1.1 | Scale | Welded dim. | ISO 2768-c | |
| Frequency [Hz] | 50 | Speed [min-1] | 1m/sec | % | Designed | 09/06/2011 | thle |
| PRO-11-0078 / MF-3 | | | | | Controlled | 22/07/2011 | thle |
| | | | | A3 | Revised | 22/07/2011 | thle |
| FREWITT | Frewitt SA, Milling and Handling of Powders P.O.B. 615, CH-1701 Fribourg, SWITZERLAND tel: +41 26 460 74 00 / fax: +41 26 460 74 01 info@frewitt.com / www.frewitt.com | | | 465107-LAY | Page 1/1 | Ver. B | |

Attachment 2
Attached to 135 383-en ... 01 Sept 11

Valid

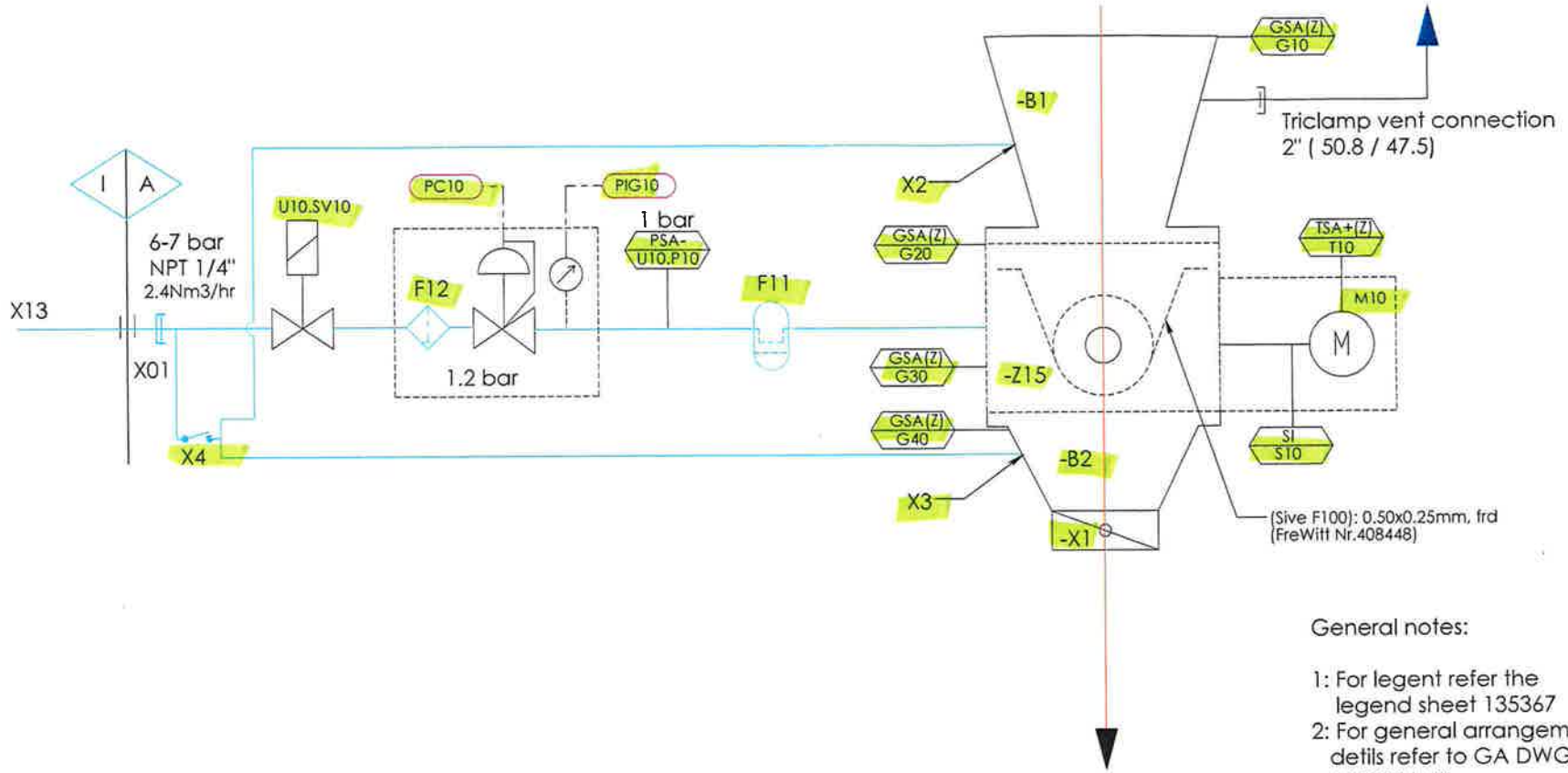


General notes:

1: For legent refer the legend sheet 135367
2: For general arrangement detils refer to GA DWG 465036-LAY

**SG.TBP. 202.M.5216**

I=Infrastructure
A=Installation
(Z)=Security

| | | | | | | | |
|---|---|---|---|---|---|---|---|
| ATEX category | Int. II 1G/1D Ext. 3D | | | | Machined dim. | ISO 2768-m | |
| Voltage [V] | 400 | Power [kW] | 1.1 | Scale | Welded dim. | ISO 2768-c | |
| Frequency [Hz] | 50 | Speed [min-1] | 43-248 | % | Designed | 24/05/2011 | ygr |
| R und I PID PRO-11-0078 / MF-3 | | | | | Controlled | 21/07/2011 | ygr |
| | | | | A3 | Revised | 21/07/2011 | ygr |
| | | | | | 465041 | Page 1/1 | Ver. C |

FREWITT
Frewitt SA: Milling and Handling of Powders
P.O.B. 615, CH-1701 Fribourg, SWITZERLAND
tel: +41 26 460 74 00 / fax: +41 26 460 74 01
info@frewitt.com / www.frewitt.com

Any and all information received by you from us shall be held and kept confidential and shall not be disclosed by you to any third party except with prior written consent of FREWITT SA

Attachment 3 Page 1/2
Attached to 135 381-En Yr.01
01 Sept 11

Valide

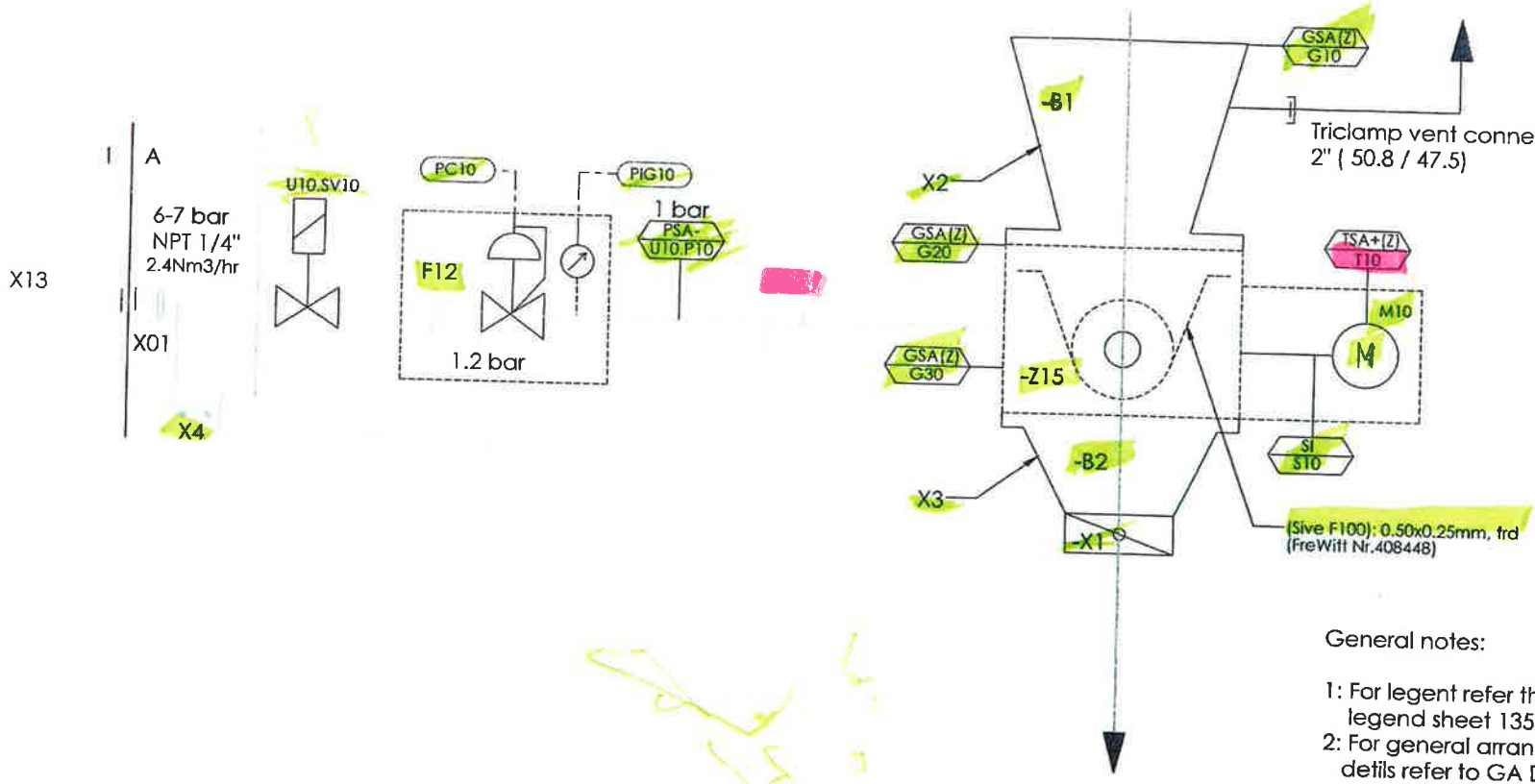


General notes:

1: For legent refer the legend sheet 135367
2: For general arrangement detils refer to GA DWG 465036-LAY

I=Infrastructure
A=Installation
(Z)=Security

| Code | Description | Tick as applicable with Initial & date | |
|---|---|---|---|
| Code 1 | REJECTED | | |
| Code 2 | Comments as indicated: Revised and resubmit. Work may not proceed | | |
| Code 3 | Approved with Comments. Work may proceed subject to incorporation of comments | | |
| Code 4 | FINAL | ✓ | 19-11-11 |

**SG.TBP. 202.M.5216**

| | | | | | | | |
|---|---|---|---|---|---|---|---|
| ATEX category | Int. II 1G/1D Ext. 3D | | | | Machined dim. | ISO 2768-m | |
| Voltage [V] | 400 | Power [kW] | 1.1 | Scale | Welded dim. | ISO 2768-c | |
| Frequency [Hz] | 50 | Speed [min-1] | 43-248 | % | Designed | 24/05/2011 | ygr |
| R und I PID PRO-11-0078 / MF-3 | | | | | Controlled | 18/07/2011 | ygr |
| | | | | A3 | Revised | 18/07/2011 | ygr |
| FREWITT | Frewitt SA: Mixing and Handling of Powders P.O.B. 615 CH-1701 Fribourg, SWITZERLAND tel: +41 26 460 74 00 / fax: +41 26 460 74 01 info@frewitt.com / www.frewitt.com | | | 465041 | Page 1/1 | Ver. B | |

Attachment 3 page 2/2
Attached to 135366-En 4e-01 01 Sept 11

Valide

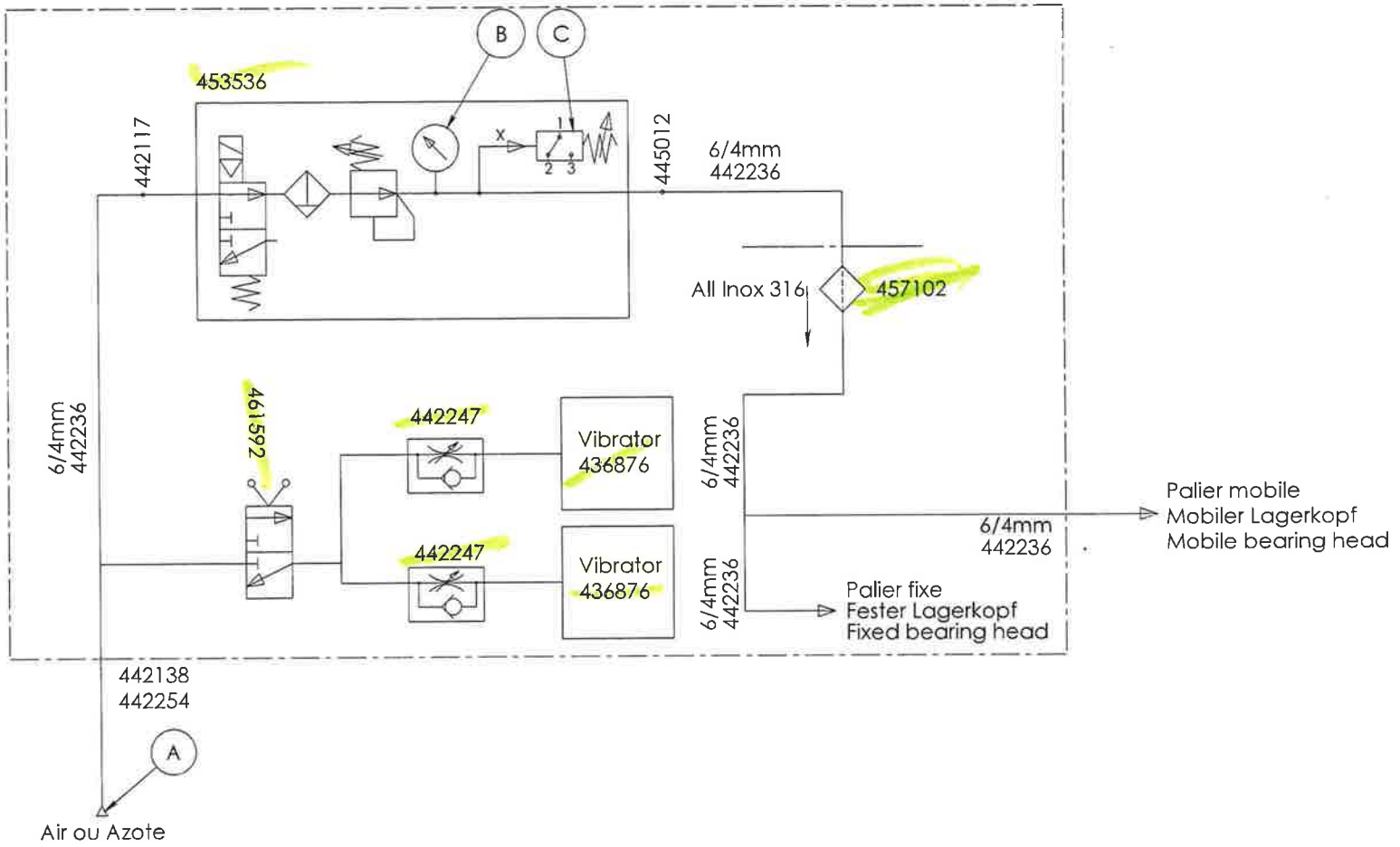


| Type / Typ / Type | Référence / Referenz / Reference | Pression / Druck / Pressure |
|---|---|---|
| MF | A | min. 3 barg |
| | B | 1.2 barg |
| | C | 0.8 barg |

| Dimensions without tolerance [mm] | above | | 6 | 30 | 120 | 400 | 1000 |
|---|---|---|---|---|---|---|---|
| | up to | 6 | 30 | 120 | 400 | 1000 | 2000 |
| Machining: ISO 2768-m | | ±0.10 | ±0.20 | ±0.30 | ±0.50 | ±0.80 | ±1.20 |
| Welding Assembly: ISO 2768-c | | ±0.30 | ±0.50 | ±0.80 | ±1.20 | ±2.00 | ±3.00 |

MATERIAL :

Schéma pneumatique ATEX

| Scale | Similar | | | |
|---|---|---|---|---|
| % | | Designed | 03/08/2010 | ygr |
| | | Controlled | 01/09/2011 | ygr |
| | Weight (kg) | Revised | 01/09/2011 | ygr |
| A3 | | Atex | | |

FREWITT

Frewitt SA Milling and Handling of Powders
P.O.B. 615 CH-1701 Fribourg SWITZERLAND
tel +41 26 460 74 00 / fax +41 26 460 74 01
info@frewitt.com / www.frewitt.com

461598-SCH

| Page | Ver |
|---|---|
| 1/1 | B |

Attachment 4
Attached to 135386-E4

01 Sept 11

# Project :PRO-11-0078

# SG.TBP 202.M.5216

Type : DM - MF-3

Carrying out : 400V,50Hz,3P+N+PE Atex 3D
Atex Zone 20 = Mill
Atex Zone 22 = Rest
Temperature class T4

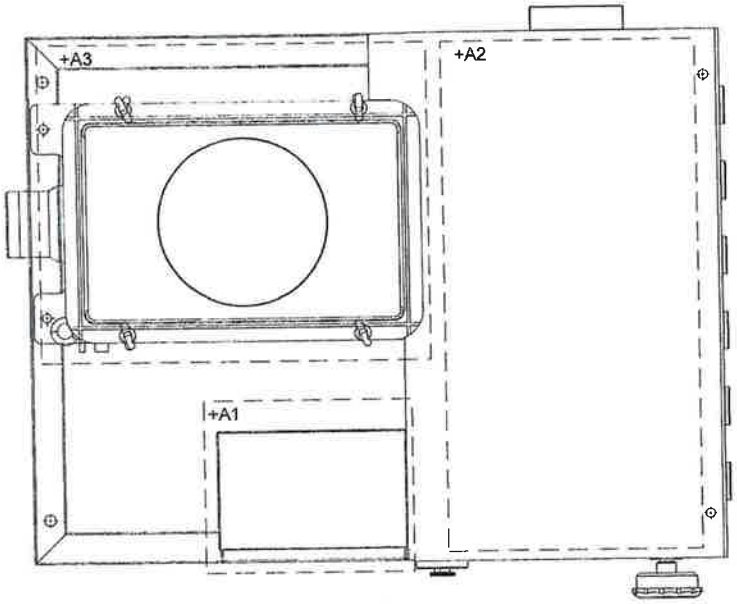


| Code | Description | Tick as applicable with Initial & date | |
|---|---|---|---|
| Code 1 | REJECTED | | |
| Code 2 | Comments as indicated: Revised and resubmit. Work may not proceed. | | |
| Code 3 | Approved with Comments. Work may proceed subject to incorporation of comments. | | |
| Code 4 | FINAL | ✓ | 27/6/11 |

Wire colors :

| | | |
|---|---|---|
| Power | 400VAC | Black |
| Power | N | Light blue |
| Power | PE | Green/Yellow |
| Control voltage | 24VDC | Blue |
| Control voltage | 0VDC | White/Blue |

Attachment 5
Attached to 13536

02 Sept'11

We reserve all rights in this document and in the information contained therein. Reproduction, use or disclosure to third parties without express authority is strictly forbidden.
© Frewitt

| | | | | | | | | |
|---|---|---|---|---|---|---|---|---|
| A | Initial version | | | date | 14.06.2011 | Novartis Singapore, SG-Singapore | 00 - Cover sheet MF-3 | |
| B | Project follow-up | 25.07.11 | vri | User | lge | | | |
| | | | | Proved | lge | | | |
| Status | change | date | name | Standard | | Origin / Repl. f. / Repl. by | 465085 | Page 1/19 |

Frewitt SA: Milling and Handling of Powders
P.O.B. 616, CH-1701 Fribourg, SWITZERLAND
tel: +41 26 460 71 00 / fax: +41 26 460 71 01
info@frewitt.com / www.frewitt.com

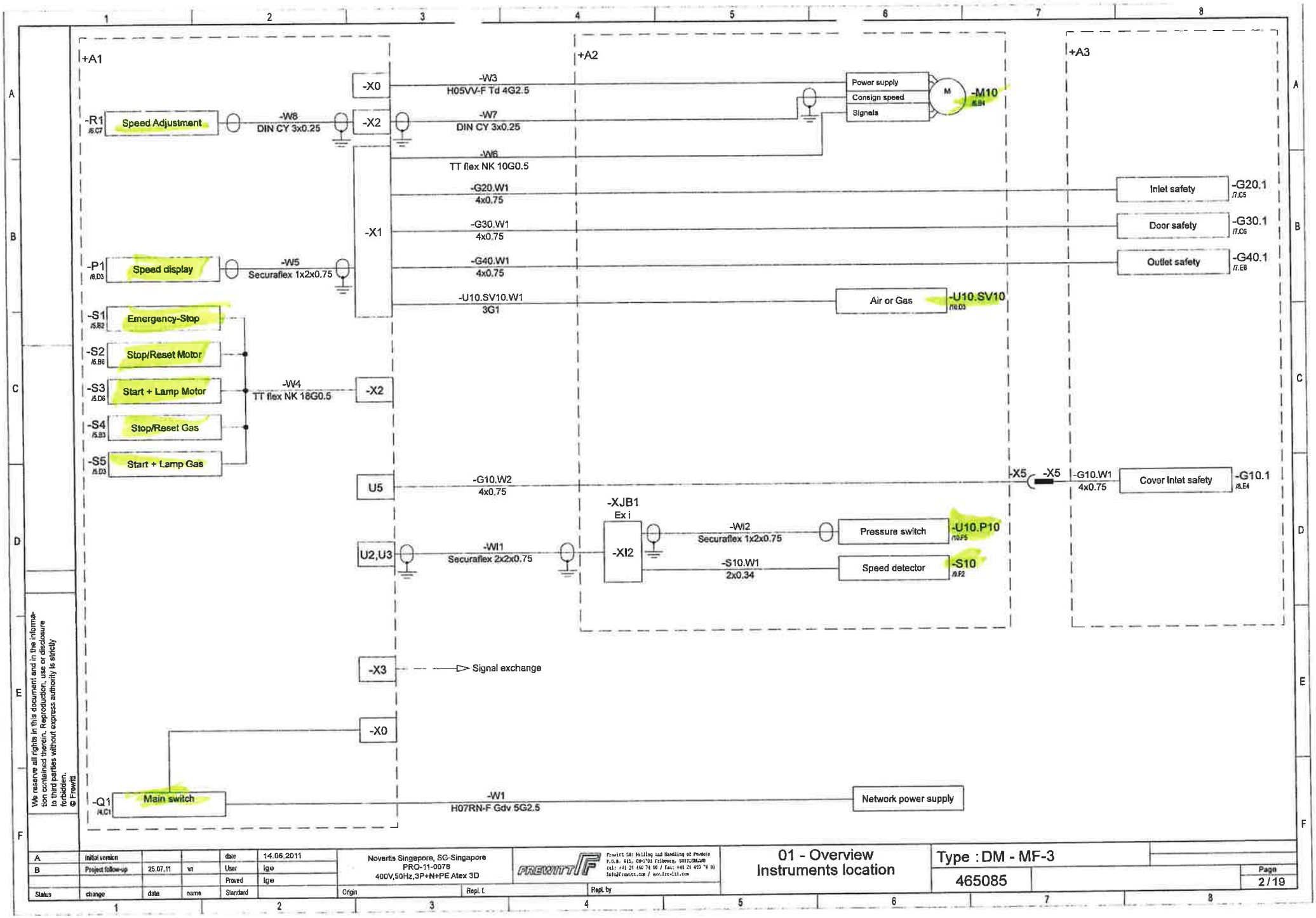


We reserve all rights in this document and in the information contained therein. Reproduction, use or disclosure to third parties without express authority is strictly forbidden.
© Frewitt

| | | | | | | | | |
|---|---|---|---|---|---|---|---|---|
| A | Initial version | | | date | 14.06.2011 | Novartis Singapore, SG-Singapore<br>PRO-11-0078<br>400V,50Hz,3P+N+PE Atex 3D | 01 - Overview<br>Instruments location | Type : DM - MF-3 |
| B | Project follow-up | 25.07.11 | vn | User | lge | | | 465085 |
| | | | | Proved | lge | | | |
| Status | change | data | name | Standard | | Origin / Repl. f. / Repl. by | | Page 2/19 |

Frewitt SA: Milling and Handling of Powders
P.O.B. 415, CH-1701 Fribourg, Switzerland
tel: +41 26 460 74 00 / fax: +41 26 460 74 01
info@frewitt.com / www.frewitt.com

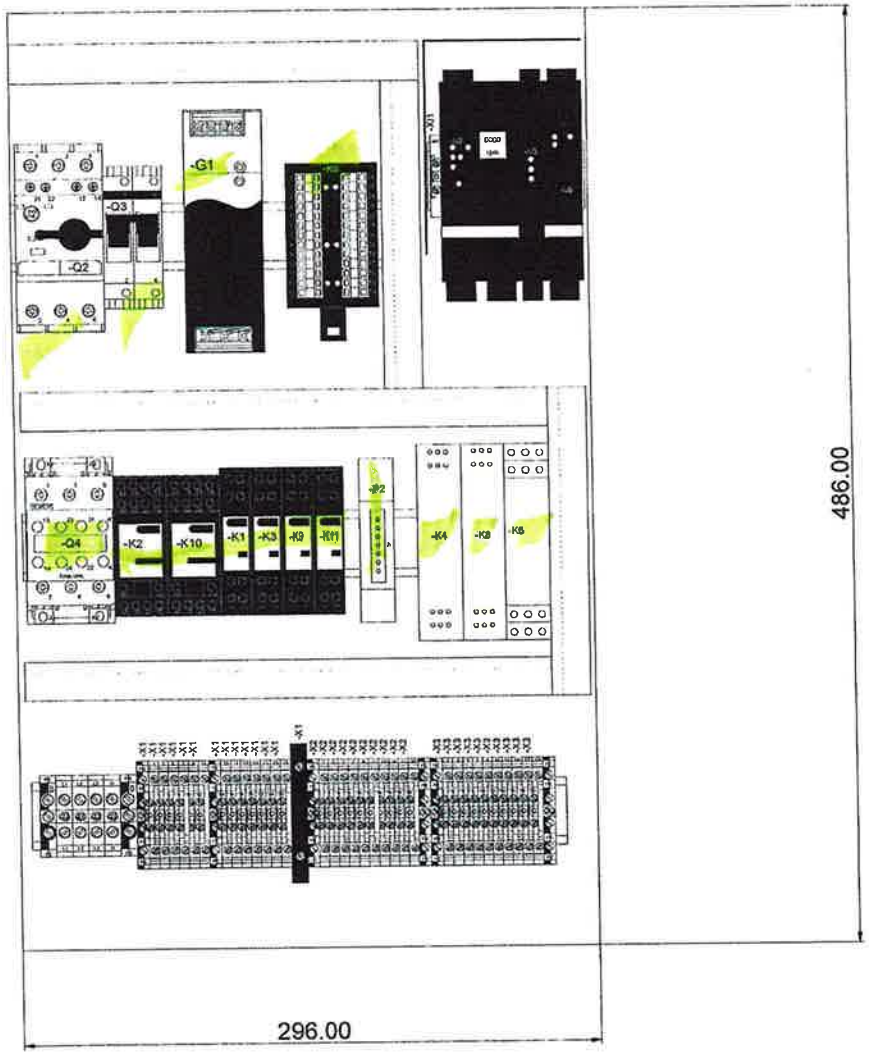


We reserve all rights in this document and in the information contained therein. Reproduction, use or disclosure to third parties without express authority is strictly forbidden.
© Frewitt

| | | | | | | | | |
|---|---|---|---|---|---|---|---|---|
| A | Initial version | | | date | 14.06.2011 | Novartis Singapore, SG-Singapore<br>PRO-11-0078<br>400V,50Hz,3P+N+PE Atex 3D | 02 - Electrocabinet details | Type : DM - MF-3 |
| B | Project follow-up | 25.07.11 | vn | User | lge | | | 465085 |
| | | | | Proved | lge | | | |
| Status | change | date | name | Standard | | Origin / Repl. t / Repl. by | | |

FREWITT — Frewitt SA: Milling and Handling of Powders, P.O.B. 615, CH-1701 Fribourg, SWITZERLAND, tel: +41 26 460 74 00 / fax: +41 26 460 74 01, info@frewitt.com / www.frewitt.com

+A1

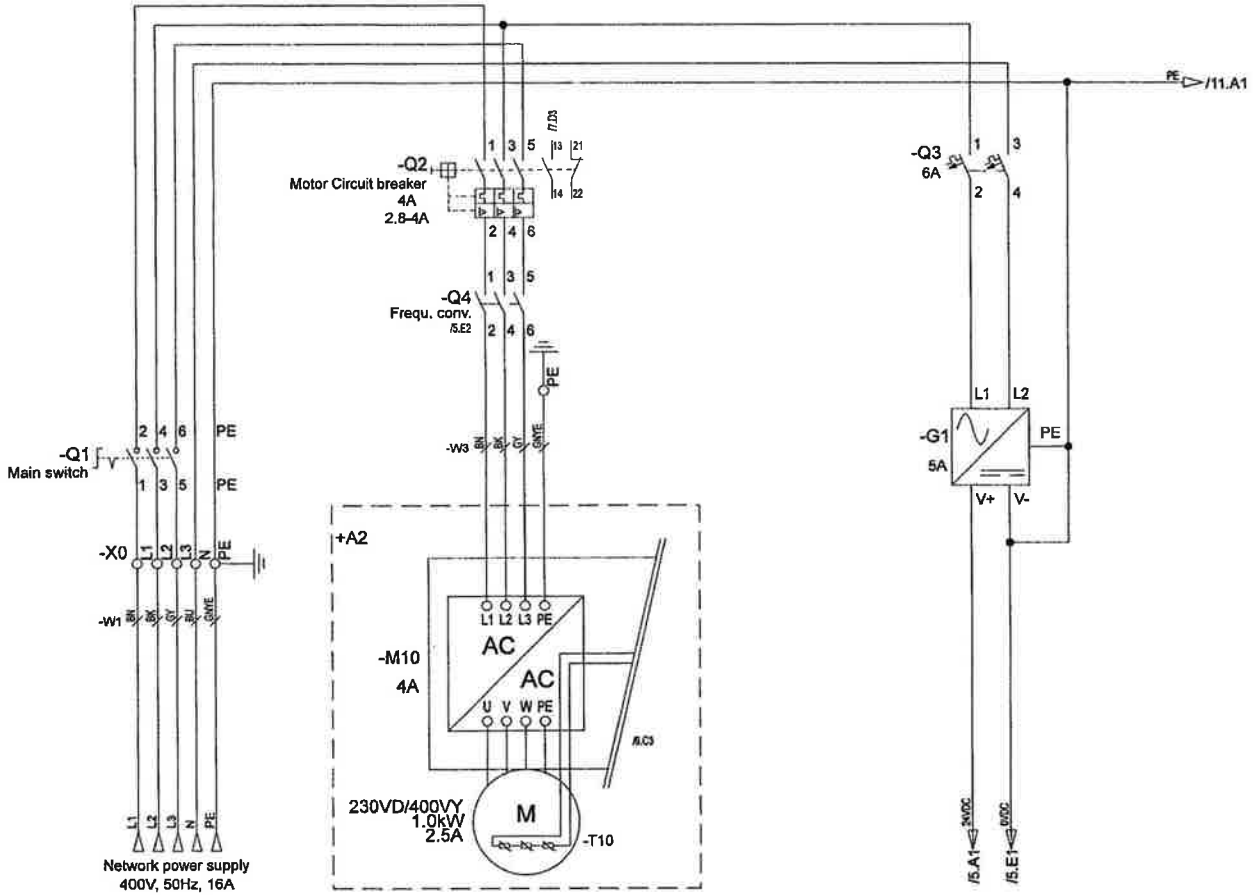


We reserve all rights in this document and in the information contained therein. Reproduction, use or disclosure to third parties without express authority is strictly forbidden.
© Frewitt

| | | | | | | | | |
|---|---|---|---|---|---|---|---|---|
| A | Initial version | | | date | 14.06.2011 | Novartis Singapore, SG-Singapore<br>PRO-11-0078<br>400V,50Hz,3P+N+PE Atex 3D | 03 - Schematic<br>Power supply | Type : DM - MF-3 |
| B | Project follow-up | 25.07.11 | vri | User | lge | | | +A1 |
| | | | | Proved | lge | | | 465085 |
| Status | change | date | name | Standard | | Origin / Repl. f. / Repl. by | | Page 4/19 |

Frewitt SA: Milling and Handling of Powders
P.O.B. 615, CH-1701 Fribourg, Switzerland
tel: +41 26 460 74 00 / fax: +41 26 460 74 01
info@frewitt.com / www.frewitt.com

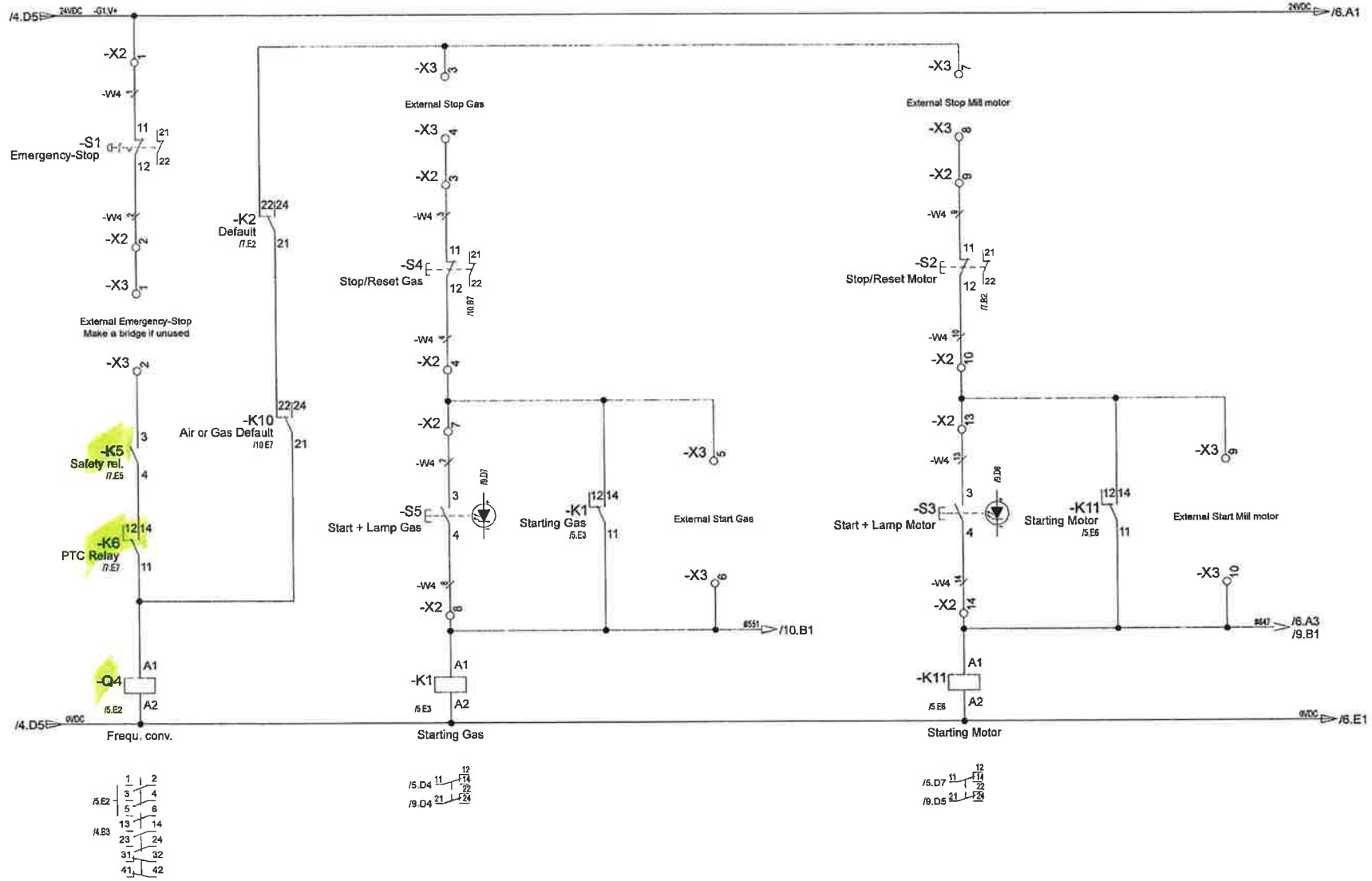


We reserve all rights in this document and in the information contained therein. Reproduction, use or disclosure to third parties without express authority is strictly forbidden.
© Frewitt

| | | | | | |
|---|---|---|---|---|---|
| A | Initial version | | | date | 14.06.2011 |
| B | Project follow-up | 25.07.11 | vn | User | lge |
| | | | | Proved | lge |
| Status | change | date | name | Standard | |

Novartis Singapore, SG-Singapore
PRO-11-0078
400V,50Hz,3P+N+PE Atex 3D

Origin | Repl. f. | Repl. by

FREWITT
Frewitt SA: Milling and Handling of Powders
P.O.B. 615, CH-1701 Fribourg, SWITZERLAND
tel: +41 26 460 74 00 / fax: +41 26 460 74 01
info@frewitt.com / www.frewitt.com

03 - Schematic Control

Type : DM - MF-3

465085

+A1

Page 5 / 19

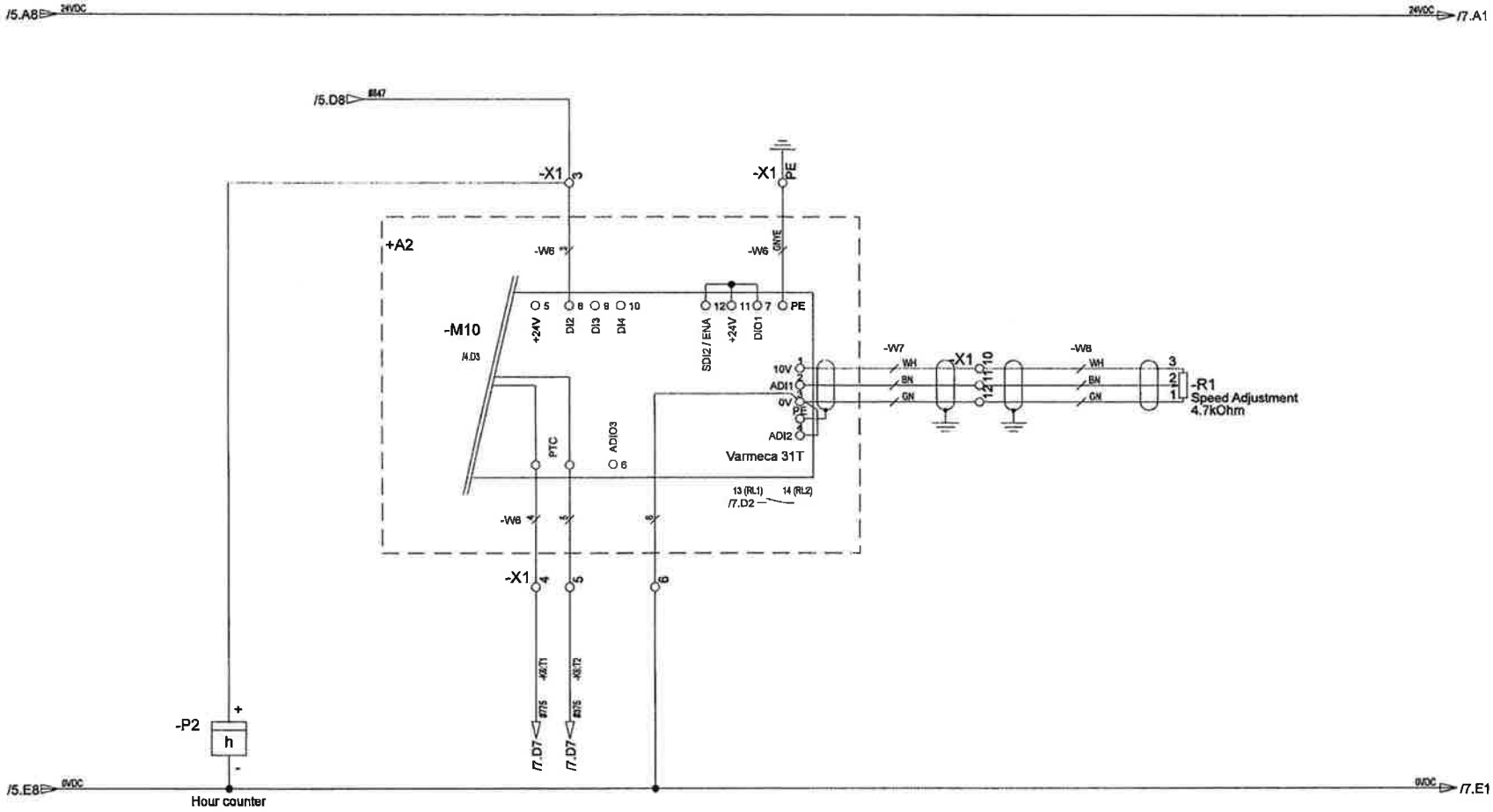


We reserve all rights in this document and in the information contained therein. Reproduction, use or disclosure to third parties without express authority is strictly forbidden.
© Frewitt

| | | | | | |
|---|---|---|---|---|---|
| A | Initial version | | | date | 14.06.2011 |
| B | Project follow-up | 25.07.11 | vri | User | lge |
| | | | | Proved | lge |
| Status | change | date | name | Standard | |

Novartis Singapore, SG-Singapore
PRO-11-0078
400V,50Hz,3P+N+PE Atex 3D

Origin | Repl. f. | Repl. by

FREWITT

03 - Schematic
Frequ. conv.

Type : DM - MF-3
465085

+A1

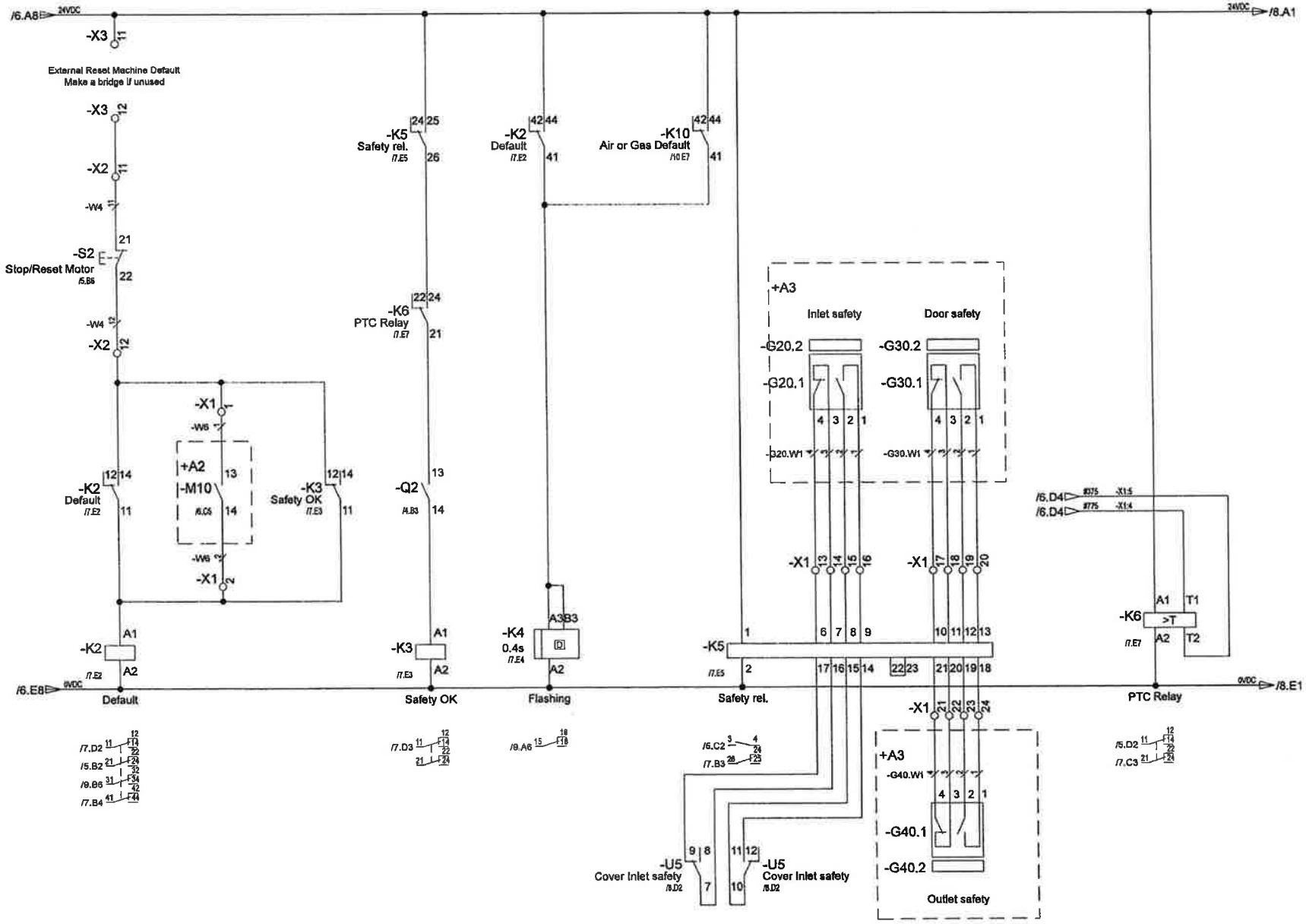


We reserve all rights in this document and in the information contained therein. Reproduction, use or disclosure to third parties without express authority is strictly forbidden.
© Frewitt

| | | | | | |
|---|---|---|---|---|---|
| A | Initial version | | | date | 14.06.2011 |
| B | Project follow-up | 25.07.11 | vn | User | lge |
| | | | | Proved | lge |
| Status | change | date | name | Standard | |

Novartis Singapore, SG-Singapore
PRO-11-0078
400V,50Hz,3P+N+PE Atex 3D

Origin | Repl. t. | Repl. by

FREWITT

Frewitt SA: Milling and Handling of Powders
P.O.B. 615, CH-1701 Fribourg, SWITZERLAND
tel: +41 26 460 76 00 / fax: +41 26 460 76 01
info@frewitt.com / www.frewitt.com

# 03 - Schematic Safety

Type : DM - MF-3

465085

+A1

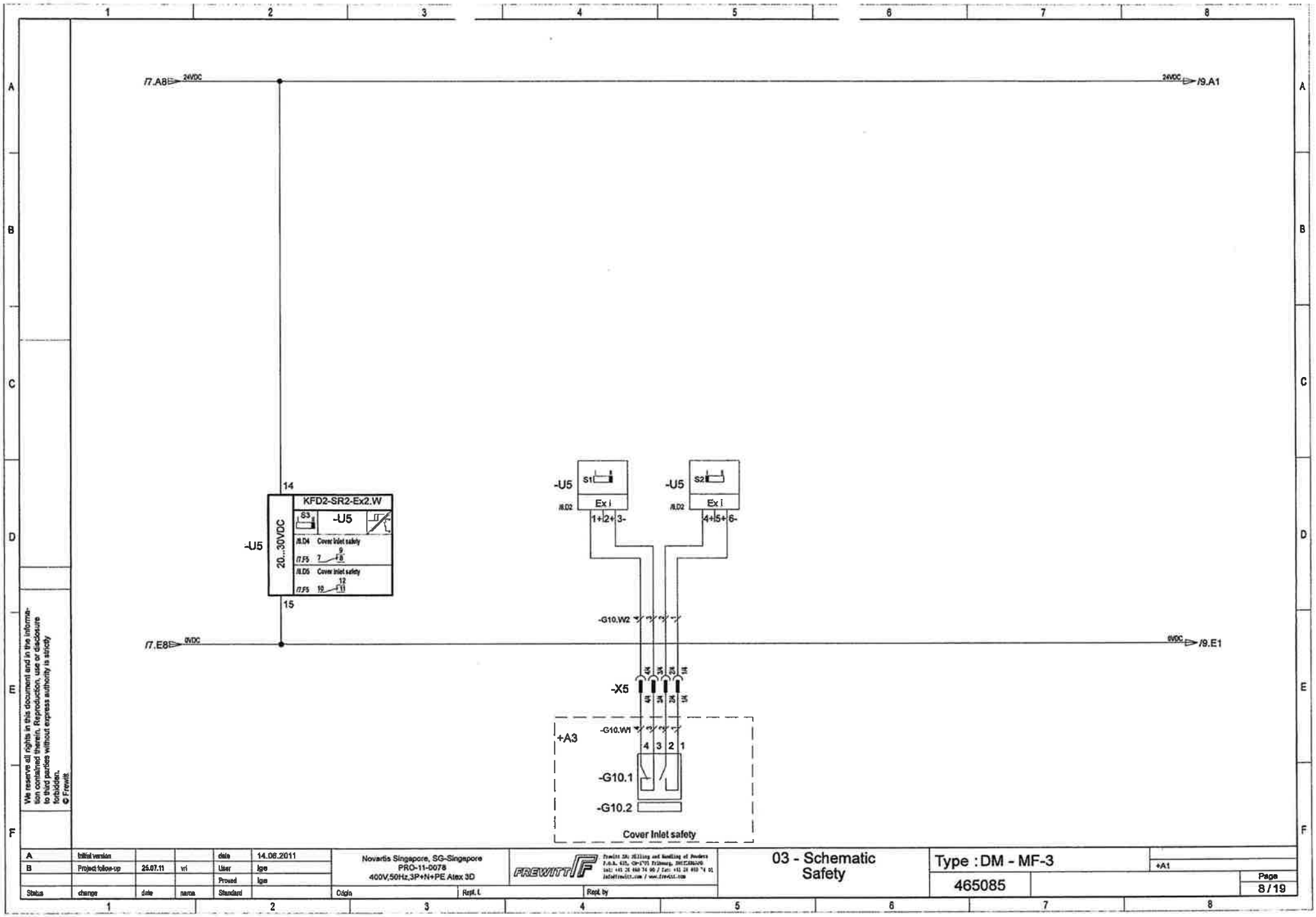


We reserve all rights in this document and in the information contained therein. Reproduction, use or disclosure to third parties without express authority is strictly forbidden.
© Frewitt

| | | | | | |
|---|---|---|---|---|---|
| A | Initial version | | | date | 14.06.2011 |
| B | Project follow-up | 25.07.11 | vri | User | lge |
| | | | | Proved | lge |
| Status | change | date | name | Standard | |

Novartis Singapore, SG-Singapore
PRO-11-0078
400V,50Hz,3P+N+PE Atex 3D

Origin | Repl. f. | Repl. by

FREWITT

03 - Schematic Safety

Type : DM - MF-3

465085

+A1

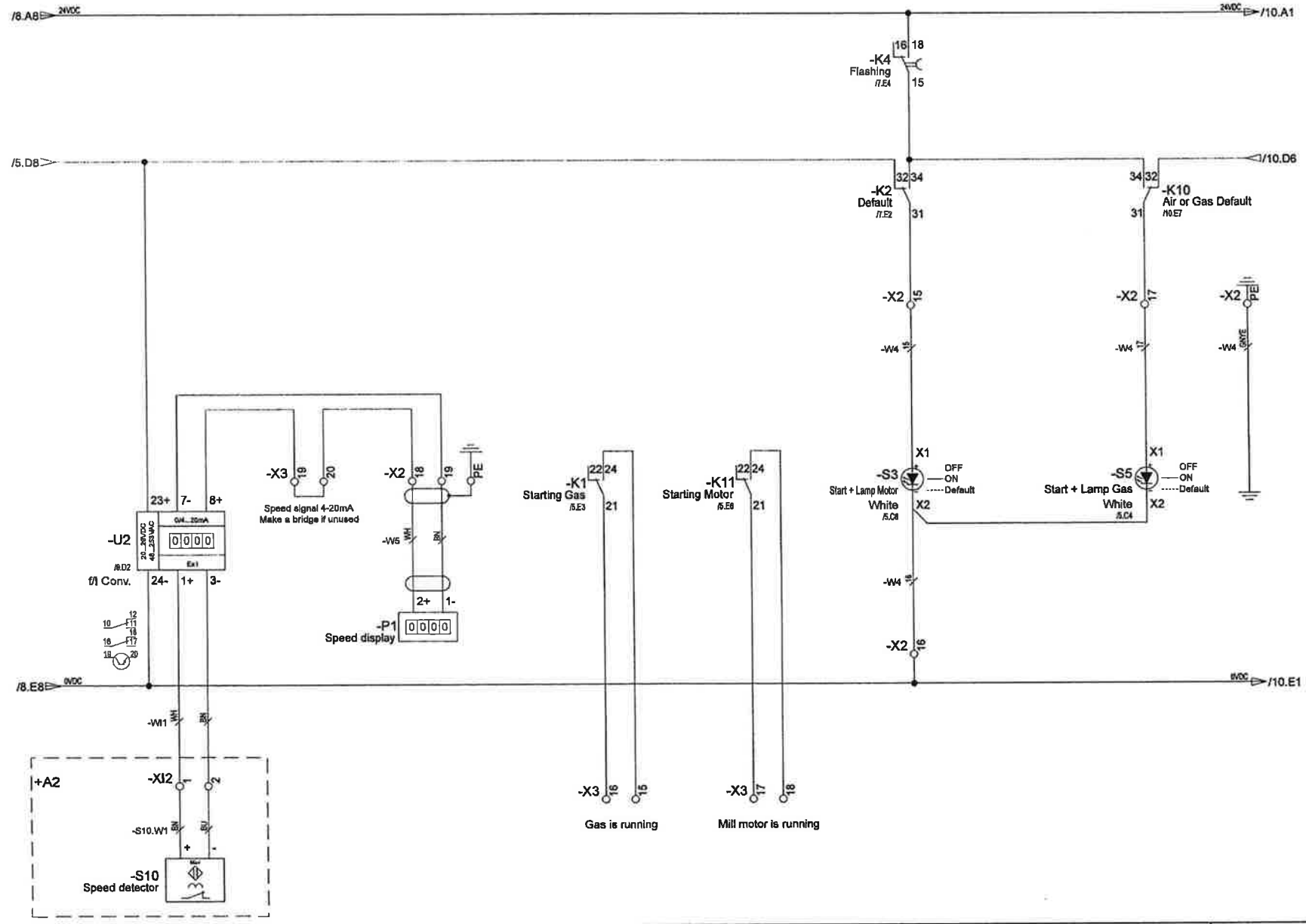


We reserve all rights in this document and in the information contained therein. Reproduction, use or disclosure to third parties without express authority is strictly forbidden.
© Frewitt

| | | | | | | | | |
|---|---|---|---|---|---|---|---|---|
| A | Initial version | | | date | 14.06.2011 | Novartis Singapore, SG-Singapore<br>PRO-11-0078<br>400V,50Hz,3P+N+PE Atex 3D | 03 - Schematic Indication | Type : DM - MF-3 |
| B | Project follow-up | 25.07.11 | vri | User | lge | | | +A1 |
| | | | | Proved | lge | | | 465085 |
| Status | change | date | name | Standard | | Origin / Repl. f. / Repl. by | | Page 9/19 |

FREWITT
Frewitt SA: Milling and Handling of Powders
P.O.B. 415, CH-1701 Fribourg, SWITZERLAND
tel: +41 26 460 74 00 / fax: +41 26 460 74 01
info@frewitt.com / www.frewitt.com

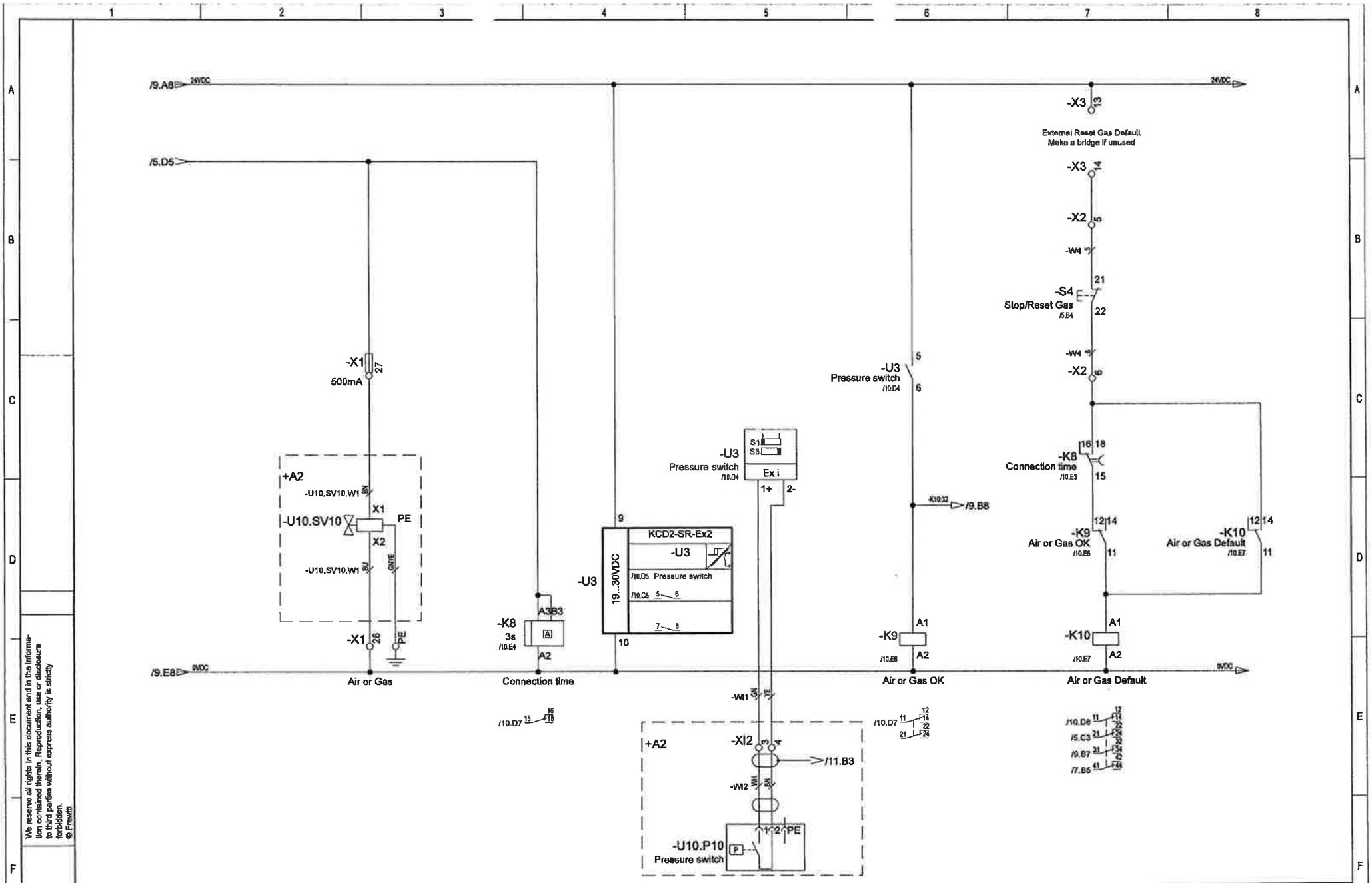
/9.A8 24VDC
/5.D5
/9.E8 0VDC
-X1 27
500mA
-X1 26
PE
+A2
-U10.SV10.W1 BK
-U10.SV10 X1 PE X2
-U10.SV10.W1 BU GN/YE
Air or Gas
-K8 A3 B3
3s
/10.E4
A2
Connection time
-U3
19...30VDC
9
10
KCD2-SR-Ex2
-U3
/10.D5 Pressure switch
/10.C6 5 6
7 8
-U3 Pressure switch /10.D4
S1 S3 Ex i
1+ 2-
-W1 GN YE
-XI2 3 4
/11.B3
-W2 WH GN
-U10.P10 Pressure switch
1 2 PE
/10.D7 15 16
-U3 5 6
Pressure switch /10.D4
-K10:32 /9.B8
-K9 A1 A2
/10.E6
Air or Gas OK
/10.D7 11 12 14 21 24
-X3 13
External Reset Gas Default
Make a bridge if unused
-X3 14
-X2 5
-W4 *3
-S4 21 22
Stop/Reset Gas
/5.B4
-W4 *3
-X2 6
-K8 16 18 15
Connection time
/10.E3
-K9 12 14 11
Air or Gas OK
/10.E6
-K10 12 14 11
Air or Gas Default
/10.E7
-K10 A1 A2
/10.E7
Air or Gas Default
/10.D8 11 12 14 22
/5.C3 21 24 32
/9.B7 31 34 42
/7.B5 41 44
We reserve all rights in this document and in the information contained therein. Reproduction, use or disclosure to third parties without express authority is strictly forbidden.
© Frewitt
A Initial version date 14.06.2011
B Project follow-up 25.07.11 vil User Iga
Proved Iga
Status change date name Standard
Novartis Singapore, SG-Singapore
PRO-11-0076
400V,50Hz,3P+N+PE Atex 3D
Origin Repl. f. Repl. by
FREWITT
03 - Schematic
Air or Gas
Type : DM - MF-3
465085
+A1
Page 10/19

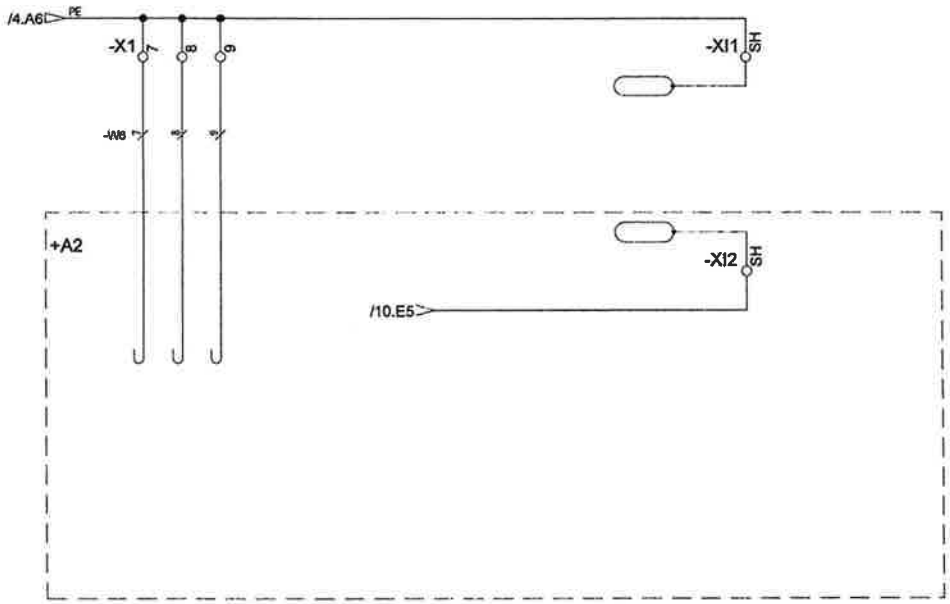


We reserve all rights in this document and in the information contained therein. Reproduction, use or disclosure to third parties without express authority is strictly forbidden.
© Frewitt

| | | | | | |
|---|---|---|---|---|---|
| A | Initial version | | | date | 14.06.2011 |
| B | Project follow-up | 25.07.11 | vti | User | lge |
| | | | | Proved | lge |
| Status | change | date | name | Standard | |

Novartis Singapore, SG-Singapore
PRO-11-0078
400V,50Hz,3P+N+PE Atex 3D

Origin | Repl. f. | Repl. by

FREWITT

Frewitt SA, Milling and Handling of Powders
P.O.B. 421, CH-1701 Fribourg, Switzerland
tel: +41 26 460 31 00 / fax: +41 26 460 74 01
info@frewitt.com / www.frewitt.com

# 03 - Schematic Spare Cable

Type : DM - MF-3

465085

+A1

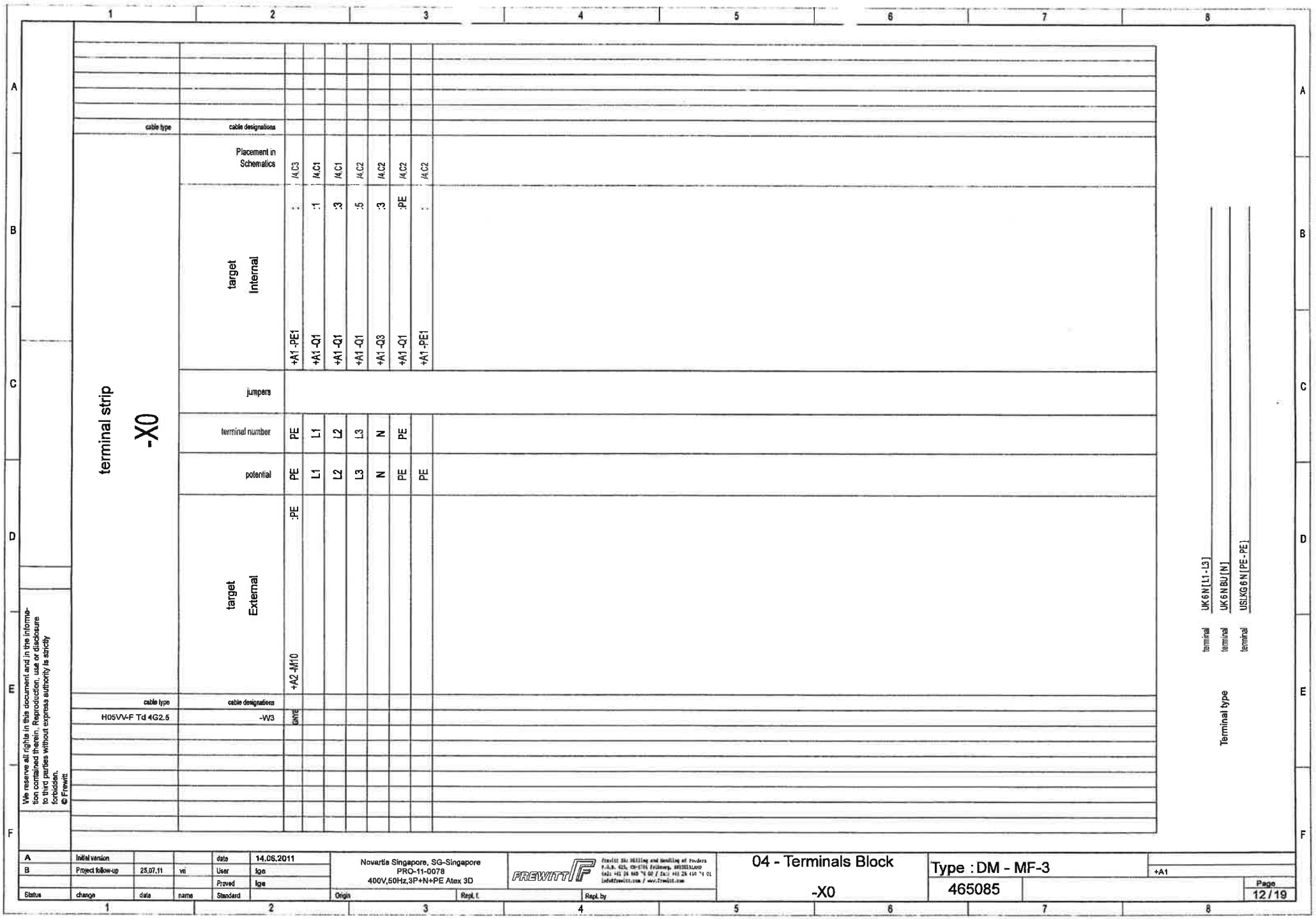

| terminal strip -X0 | | | | | | | | | |
|---|---|---|---|---|---|---|---|---|---|
| cable type | cable designations | | | | | | | | |
| | Placement in Schematics | /4.C3 | /4.C1 | /4.C1 | /4.C2 | /4.C2 | /4.C2 | /4.C2 | |
| | target Internal | :1 | :1 | :3 | :5 | :3 | :PE | :1 | |
| | | +A1 -PE1 | +A1 -Q1 | +A1 -Q1 | +A1 -Q1 | +A1 -Q3 | +A1 -Q1 | +A1 -PE1 | |
| | jumpers | | | | | | | | |
| | terminal number | PE | L1 | L2 | L3 | N | PE | | |
| | potential | PE | L1 | L2 | L3 | N | PE | PE | |
| | target External | :PE | | | | | | | |
| | | +A2 -M10 | | | | | | | |
| cable type | cable designations | | | | | | | | |
| H05VV-F Td 4G2.5 | -W3 | GNYE | | | | | | | |

Terminal type

| | |
|---|---|
| terminal | UK 6 N [L1 - L3] |
| terminal | UK 6 N BU [N] |
| terminal | USLKG 6 N [PE - PE] |

We reserve all rights in this document and in the information contained therein. Reproduction, use or disclosure to third parties without express authority is strictly forbidden.
© Frewitt

| | | | | | |
|---|---|---|---|---|---|
| A | Initial version | | | date | 14.06.2011 |
| B | Project follow-up | 25.07.11 | vri | User | lge |
| | | | | Proved | lge |
| Status | change | date | name | Standard | |

Novartis Singapore, SG-Singapore
PRO-11-0078
400V,50Hz,3P+N+PE Atex 3D

Origin | Repl. f. | Repl. by

FREWITT

04 - Terminals Block

-X0

Type : DM - MF-3

465085

+A1

Page 12 / 19

# terminal strip

# -X1

| cable type | cable designations | | | | | |
|---|---|---|---|---|---|---|
| DIN CY 3x0.25 | -W8 | | | | | |
| TT flex NK 10G0.5 | -W6 | | | | | |
| DIN CY 3x0.25 | -W7 | | | | | |
| 4x0.75 | -G20.W1 | | | | | |
| 4x0.75 | -G30.W1 | | | | | |
| 4x0.75 | +A3 -G40.W1 | | | | | |
| 3G1 | +A2 -U10.SV10.W1 | | | | | |

| terminal number | -W8 | Placement in Schematics | target Internal | jumpers | potential | target External | -W6 | -W7 | -G20.W1 | -G30.W1 | +A3 -G40.W1 | +A2 -U10.SV10.W1 |
|---|---|---|---|---|---|---|---|---|---|---|---|---|
| PE | | /6.B5 | +A1 -PE1 : | | PE | +A2 -M10 :PE | GNYE | | | | | |
| 1 | | /7.C2 | | | 24VDC_S | +A2 -M10 :13 | 1 | | | | | |
| 2 | | /7.D2 | | | | +A2 -M10 :14 | 2 | | | | | |
| 3 | | /6.B4 | +A1 -P2 :+ | | | +A2 -M10 :8 | 3 | | | | | |
| 4 | | /6.D4 | +A1 -K6 :T1 | | | +A2 -M10 : | 4 | | | | | |
| 5 | | /6.D4 | +A1 -K6 :T2 | | | +A2 -M10 : | 5 | | | | | |
| 6 | | /6.D4 | | • | 0VDC | +A2 -M10 : | 6 | | | | | |
| 7 | | /11.A2 | | • | PE | +A2 -Res2 : | 7 | | | | | |
| 8 | | /11.A2 | | • | PE | +A2 -Res2 : | 8 | | | | | |
| 9 | | /11.A2 | | • | PE | +A2 -Res2 : | 9 | | | | | |
| 10 | WH | /6.C6 | +A1 -R1 :3 | | | +A2 -M10 :1 | | WH | | | | |
| 11 | BN | /6.C8 | +A1 -R1 :2 | | | +A2 -M10 :2 | | BN | | | | |
| 12 | GN | /6.C6 | +A1 -R1 :1 | | | +A2 -M10 :3 | | GN | | | | |
| PE | | | | | | | | | | | | |
| 13 | | /7.D5 | +A1 -K5 :6 | | | +A3 -G20.1 :4 | | | 4 | | | |
| 14 | | /7.D6 | +A1 -K5 :7 | | | +A3 -G20.1 :3 | | | 3 | | | |
| 15 | | /7.D6 | +A1 -K5 :8 | | | +A3 -G20.1 :2 | | | 2 | | | |
| 16 | | /7.D6 | +A1 -K5 :9 | | | +A3 -G20.1 :1 | | | 1 | | | |
| 17 | | /7.D6 | +A1 -K5 :10 | | | +A3 -G30.1 :4 | | | | 4 | | |
| 18 | | /7.D6 | +A1 -K5 :11 | | | +A3 -G30.1 :3 | | | | 3 | | |
| 19 | | /7.D6 | +A1 -K5 :12 | | | +A3 -G30.1 :2 | | | | 2 | | |
| 20 | | /7.D6 | +A1 -K5 :13 | | | +A3 -G30.1 :1 | | | | 1 | | |
| 21 | | /7.E6 | +A1 -K5 :21 | | | +A3 -G40.1 :4 | | | | | 4 | |
| 22 | | /7.E6 | +A1 -K5 :20 | | | +A3 -G40.1 :3 | | | | | 3 | |
| 23 | | /7.E6 | +A1 -K5 :19 | | | +A3 -G40.1 :2 | | | | | 2 | |
| 24 | | /7.E6 | +A1 -K5 :18 | | | +A3 -G40.1 :1 | | | | | 1 | |
| 25 | | | | | | | | | | | | |
| 26 | | /10.E3 | | • | 0VDC | +A2 -U10.SV10 :X2 | | | | | | BU |
| 27 | | /10.C3 | | | | +A2 -U10.SV10 :X1 | | | | | | BN |

Terminal type

| | |
|---|---|
| terminal | UKK 3 [ 1 - 26 ] |
| terminal | UK5-HESI 3004100_2 [ 27 ] |
| terminal | UKK 5-PE [ PE - PE ] |

We reserve all rights in this document and in the information contained therein. Reproduction, use or disclosure to third parties without express authority is strictly forbidden.
© Frewitt

| Status | change | date | name | | |
|---|---|---|---|---|---|
| A | Initial version | | | date | 14.06.2011 |
| B | Project follow-up | 25.07.11 | vd | User | lge |
| | | | | Proved | lge |
| | | | | Standard | |

Novartis Singapore, SG-Singapore
PRO-11-0078
400V,50Hz,3P+N+PE Atex 3D

Origin | Repl. f. | Repl. by

FREWITT — Frewitt SA, Milling and Handling of Powders, P.O.B. 615, CH-1701 Fribourg, SWITZERLAND, tel: +41 26 460 74 00 / fax: +41 26 460 74 01, info@frewitt.com / www.frewitt.com

04 - Terminals Block
-X1

Type : DM - MF-3
465085

+A1

We reserve all rights in this document and in the information contained therein. Reproduction, use or disclosure to third parties without express authority is strictly forbidden.
© Frewitt

| | | | | |
|---|---|---|---|---|
| A | Initial version | | date | 14.06.2011 |
| B | Project follow-up | 25.07.11 | vri | Ige |
| | Status | change | date | name |

Novartis Singapore, SG-Singapore
PRO-11-0078
400V,50Hz,3P+N+PE,Atex 3D

Origin | Rep.Lt | Rep.Ly

FREWITT

Frewitt SA, Milling and Moulding of Products
P.O.B. 153, CH-1701 Fribourg, SWITZERLAND
Phone +41 26 460 70 00, Fax +41 26 460 70 01
info@frewitt.com / www.frewitt.com

04 - Terminals Block

-X2

Type : DM - MF-3

465085

+A1

Page 14/19

# terminal strip

# -X2

| cable type | cable designations | target External | potential | terminal number | jumpers | target Internal | Placement in Schematics | cable designations | cable type |
|---|---|---|---|---|---|---|---|---|---|
| | | | PE | PE | | | /8.D4 | | |
| | | +A1 -S1 :11 | 24VDC | 1 | | | /5.A2 | | |
| | | +A1 -S1 :12 | | 2 | | +A1 -X3 :1 | /5.B2 | -W5 | Securaflex 1x2x0.75 |
| | | +A1 -S4 :11 | | 3 | | +A1 -X3 :4 | /5.B3 | | |
| | | +A1 -S4 :12 | | 4 | | | /5.C3 | -W4- | TT flex NK 16G0.5 |
| | | +A1 -S4 :21 | | 5 | | +A1 -X3 :14 | /10.B7 | | |
| | | +A1 -S4 :22 | | 6 | | | /10.C7 | +A2 -U10.SV10.W1 | 3G1 |
| | | +A1 -S5 :3 | | 7 | | | /5.C3 | | |
| | | +A1 -S5 :4 | | 8 | | | /5.D3 | | |
| | | +A1 -S2 :11 | | 9 | | +A1 -X3 :8 | /5.B6 | | |
| | | +A1 -S2 :12 | | 10 | | | /5.C6 | | |
| | | +A1 -S2 :21 | | 11 | | +A1 -X3 :12 | /7.B2 | | |
| | | +A1 -S2 :22 | 24VDC_S | 12 | | | /7.C2 | | |
| | | +A1 -S3 :3 | | 13 | | | /5.C6 | | |
| | | +A1 -S3 :4 | | 14 | | | /5.D6 | | |
| | | +A1 -S3 :X1 | | 15 | | +A1 -K2 :31 | /8.C6 | | |
| | | +A1 -S3 :X2 | 0VDC | 16 | | | /8.E6 | | |
| | | +A1 -S5 :X1 | | 17 | | +A1 -K10 :31 | /8.C7 | | |
| | | +A1 -P1 :2+ | | 18 | | +A1 -X3 :20 | /8.D3 | | |
| | | +A1 -P1 :1- | | 19 | | +A1 -U2 :7- | /8.D3 | | |
| | | | | 20 | | | | | |
| | | +A1 -PE1 : | PE | PE | | +A1 -PE1 : | /8.C8 | | |
| | | +A2 -U10.SV10 :PE | PE | | | +A1 -PE1 : | /10.E3 | | |

Terminal type

Terminal UKK 3 [1 - 20]

Terminal UKK 5-PE [PE - PE]

Terminal

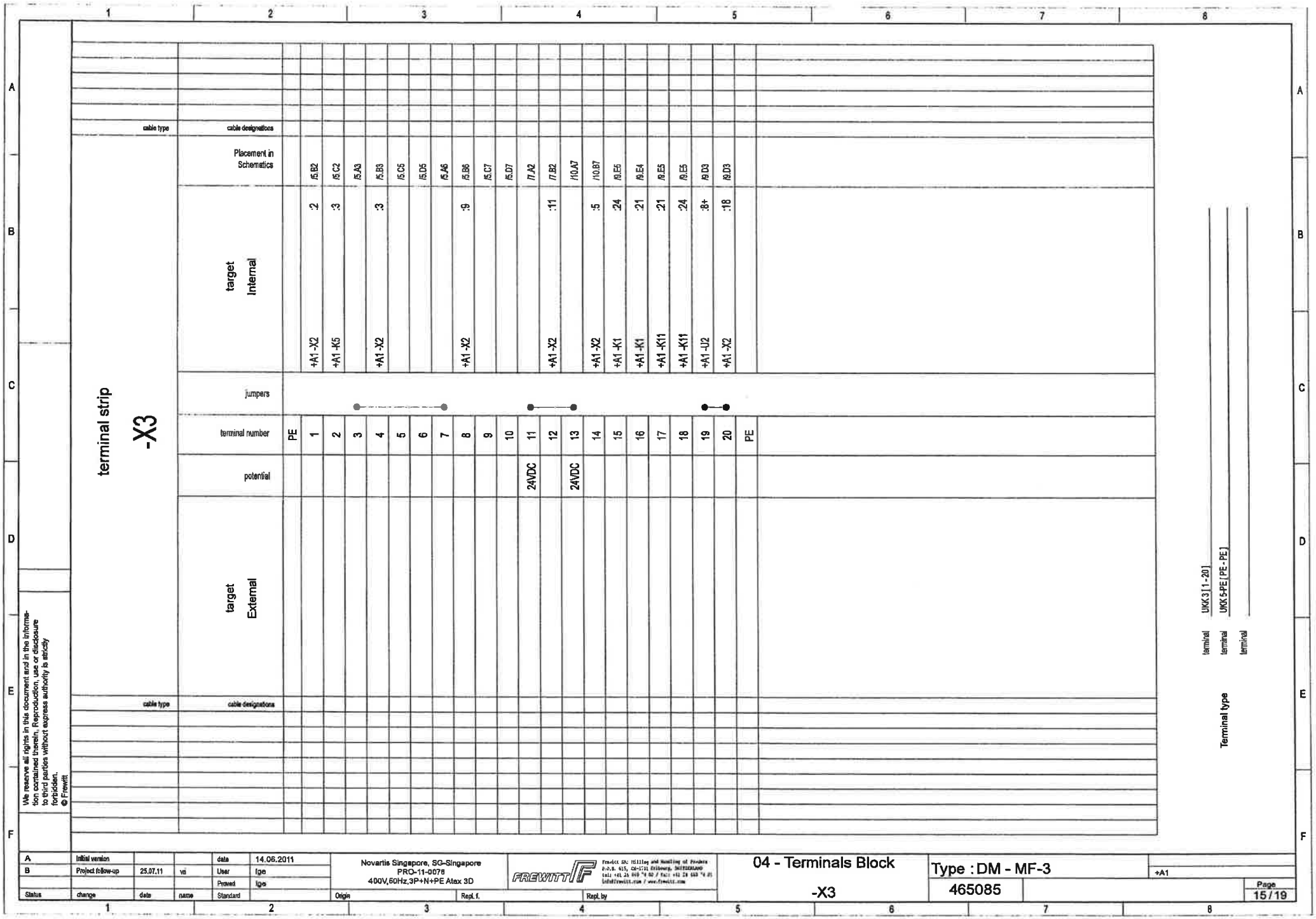
terminal strip
-X3
cable type
cable designations
Placement in Schematics
target Internal
jumpers
terminal number
potential
target External
cable type
cable designations
PE 1 2 3 4 5 6 7 8 9 10 11 12 13 14 15 16 17 18 19 20 PE
24VDC
24VDC
/5.B2 /5.C2 /5.A3 /5.B3 /5.C5 /5.D5 /5.A6 /5.B6 /5.C7 /5.D7 /7.A2 /7.B2 /10.A7 /10.B7 /9.E6 /9.E4 /9.E5 /9.E5 /9.D3 /9.D3
:2 :3 :3 :9 :11 :5 :24 :21 :21 :24 :8+ :18
+A1 -X2 +A1 -K5 +A1 -X2 +A1 -X2 +A1 -X2 +A1 -K1 +A1 -K1 +A1 -K11 +A1 -K11 +A1 -U2 +A1 -X2
terminal UKK 3 [1 - 20]
terminal UKK 5-PE [PE - PE]
terminal
Terminal type
We reserve all rights in this document and in the information contained therein. Reproduction, use or disclosure to third parties without express authority is strictly forbidden.
© Frewitt
A Initial version data 14.06.2011
B Project follow-up 25.07.11 vsi User lge
Proved lge
Status change date name Standard
Novartis Singapore, SG-Singapore
PRO-11-0078
400V,60Hz,3P+N+PE Atex 3D
Origin Repl. f. Repl. by
FREWITT
04 - Terminals Block
-X3
Type : DM - MF-3
465085
+A1
Page 15 / 19

| | | | | | | | | | |
|---|---|---|---|---|---|---|---|---|---|
| Securaflex 1x2x0.75 | -WI2 | | | | WH | BN | SH | | |
| 2x0.34 | -S10.WI | | BN | BU | | | | | |
| cable type | cable designations | | | | | | | | |
| terminal strip -XI2 | Placement in Schematics | | /9.E2 | /9.E2 | /10.E5 | /10.E5 | /11.B4 | | |
| | target Internal | | :+ | :- | :1 | :2 | | | |
| | | | +A2 -S10 | +A2 -S10 | +A2 -U10,P10 | +A2 -U10,P10 | | | |
| | jumpers | | | | | | | | |
| | terminal number | PE | 1 | 2 | 3 | 4 | SH | PE | |
| | potential | | | | | | PE | | |
| | target External | | :1+ | :3- | :1+ | :2- | | | |
| | | | +A1 -U2 | +A1 -U2 | +A1 -U3 | +A1 -U3 | | | |
| cable type | cable designations | | | | | | | | |
| Securaflex 2x2x0.75 | -WI1 | | WH | BN | GN | YE | SH | | |

Terminal type

terminal UK 3 N BU [ 1 - 4 , SH ]

terminal USLKG 3 [ PE - PE ]

terminal

We reserve all rights in this document and in the information contained therein. Reproduction, use or disclosure to third parties without express authority is strictly forbidden.
© Frewitt

| | | | | | | | | | |
|---|---|---|---|---|---|---|---|---|---|
| A | Initial version | | | date | 14.06.2011 | Novartis Singapore, SG-Singapore PRO-11-0078 400V,50Hz,3P+N+PE Atex 3D | FREWITT | 04 - Terminals Block -XI2 | Type : DM - MF-3 |
| B | Project follow-up | 25.07.11 | vri | User | Ige | | | | 465085 |
| | | | | Proved | Ige | | | | +A2 |
| Status | change | date | name | Standard | | Origin / Repl. f. / Repl. by | | | Page 16 / 19 |

Frewitt SA: Milling and Handling of Powders
P.O.B. 615, CH-1701 Fribourg, SWITZERLAND
tel. +41 26 460 74 00 / fax: +41 26 460 74 01
info@frewitt.com / www.frewitt.com

# Bill of material

| Article Number | Description | Manufacturer | Reference | Device | Quantity |
|---|---|---|---|---|---|
| 438585 | Lock bracket | FREWITT | 438585 | -+A1 | 2 |
| 461232 | Electrical cabinet | FREWITT | 461232 | -+A1 | 1 |
| 462084 | Power supply | MEANWELL | WDR-120-24 | -G1 | 1 |
| 404567 | Magnet | ELOBAU | 304 200 00 V2 | -G10 | 1 |
| 404568 | Magnet safety switch | ELOBAU | 671 271 MU0 5 | -G10 | 1 |
| 404567 | Magnet | ELOBAU | 304 200 00 V2 | -G20 | 1 |
| 404568 | Magnet safety switch | ELOBAU | 671 271 MU0 5 | -G20 | 1 |
| 404567 | Magnet | ELOBAU | 304 200 00 V2 | -G30 | 1 |
| 404568 | Magnet safety switch | ELOBAU | 671 271 MU0 5 | -G30 | 1 |
| 404567 | Magnet | ELOBAU | 304 200 00 V2 | -G40 | 1 |
| 404568 | Magnet safety switch | ELOBAU | 671 271 MU0 5 | -G40 | 1 |
| 456536 | Relay | SIEMENS | LZS:RT4A4L24 | -K1 | 1 |
| 456535 | Relay | SIEMENS | LZS:PT5A5L24 | -K2 | 1 |
| 456536 | Relay | SIEMENS | LZS:RT4A4L24 | -K3 | 1 |
| 405381 | Timing relay | SIEMENS | 3RP1505-1AP30 | -K4 | 1 |
| 404645 | Safety relay | ELOBAU | 462 121 G1 U | -K5 | 1 |
| 454256 | PTC Relay | SIEMENS | 3RN10 11-1BB00 | -K6 | 1 |
| 405381 | Timing relay | SIEMENS | 3RP1505-1AP30 | -K8 | 1 |
| 456536 | Relay | SIEMENS | LZS:RT4A4L24 | -K9 | 1 |
| 456535 | Relay | SIEMENS | LZS:PT5A5L24 | -K10 | 1 |
| 456536 | Relay | SIEMENS | LZS:RT4A4L24 | -K11 | 1 |
| 461222 | Integralmotor | LEROY-SOMER | LSPX90S VMA31T | -M10 | 1 |
| 429506 | Digital display | PR ELECTRONICS | 5531B | -P1 | 1 |
| 463735 | Hour counter | ABB | E233-12/48 | -P2 | 1 |
| 404850 | Safety switch | TELEMECANIQUE | VCF-01 | -Q1 | 1 |
| 404851 | Terminal protection | TELEMECANIQUE | VZ-8 | -Q1 | 2 |
| 456530 | Motor Circuit breaker | SIEMENS | 3RV10211EA15 | -Q2 | 1 |
| 457098 | Protection switch | SIEMENS | 5SY6 206-7 | -Q3 | 1 |
| 456534 | Contactor | SIEMENS | 3RT10241BB44 | -Q4 | 1 |

We reserve all rights in this document and in the information contained therein. Reproduction, use or disclosure to third parties without express authority is strictly forbidden. © Frewitt

| | | | | | | | | | |
|---|---|---|---|---|---|---|---|---|---|
| A | Initial version | | | date | 14.06.2011 | Novartis Singapore, SG-Singapore<br>PRO-11-0078<br>400V,50Hz,3P+N+PE Atex 3D | FREWITT | 05 - Bill of material | Type : DM - MF-3 |
| B | Project follow-up | 25.07.11 | vrl | User | lge | | | | |
| | | | | Proved | lge | | | | 465085 |
| Status | change | date | name | Standard | | Origin / Repl. f. / Repl. by | | | Page 17 / 19 |

# Bill of material

| Article Number | Description | Manufacturer | Reference | Device | Quantity |
|---|---|---|---|---|---|
| 411869 | Head for potentiometer | TELEMECANIQUE | ZB4 BD912 | -R1 | 1 |
| 457636 | Potentiometer | RADIOHM | P20C4K7-50F1 | -R1 | 1 |
| 404852 | Emergency-Stop button | TELEMECANIQUE | XB4-BS542 | -S1 | 1 |
| 404857 | "EMERGENCY-STOP" label | TELEMECANIQUE | ZBY-9330 | -S1 | 1 |
| 409597 | Auxiliary contact | TELEMECANIQUE | ZBE-102 | -S1 | 1 |
| 409597 | Auxiliary contact | TELEMECANIQUE | ZBE-102 | -S2 | 2 |
| 416899 | Pushbutton | TELEMECANIQUE | XB4-BA21 | -S2 | 1 |
| 431179 | Illuminated pushbutton | TELEMECANIQUE | XB4-BW31B5 | -S3 | 1 |
| 409597 | Auxiliary contact | TELEMECANIQUE | ZBE-102 | -S4 | 2 |
| 416899 | Pushbutton | TELEMECANIQUE | XB4-BA21 | -S4 | 1 |
| 431179 | Illuminated pushbutton | TELEMECANIQUE | XB4-BW31B5 | -S5 | 1 |
| 406886 | Proximity Switch | PEPPERL+FUCHS | NCB 1.5-8GM25-NO | -S10 | 1 |
| 422164 | Proximity Switch support | FREWITT | 422164 | -S10 | 1 |
| 417735 | f/l converter | PEPPERL+FUCHS | KFU8-UFC-Ex1.d | -U2 | 1 |
| 442787 | Ex-i Switch Amplifier | PEPPERL+FUCHS | KCD2-SR-Ex2 | -U3 | 1 |
| 411946 | Ex-i Switch Amplifier | PEPPERL+FUCHS | KFD2-SR2-Ex2.W | -U5 | 1 |
| 453536 | Pneumat. preparation unit | Frewitt | 453536 | -U10 | 1 |
| => | Pressure switch | UNIVER | 405 002 112 11 | -U10.P10 | 1 |
| => | Solenoid valve | ASCO JOUCOMATIC | PV G356A002VMS | -U10.SV10 | 1 |
| 435273 | Cable | HEINIGER | 115 120 520 | -W1 | 1 |
| 403952 | Cable | HEINIGER | 114 020 420 | -W3 | 1 |
| 435708 | Cable | HEINIGER | 888 830 183 | -W4 | 1 |
| 451300 | Cable | HEINIGER | 777 923 002 | -W5 | 1 |
| 435710 | Cable | HEINIGER | 888 830 103 | -W6 | 1 |
| 412701 | Cable | HEINIGER | 999 891 033 | -W7 | 1 |
| 412701 | Cable | HEINIGER | 999 891 033 | -W8 | 1 |
| 451301 | Cable | HEINIGER | 777 923 022 | -W11 | 1 |
| 451300 | Cable | HEINIGER | 777 923 002 | -W12 | 1 |
| 456540 | Terminal | PHOENIX CONTACT | 3004524 | -X0 | 3 |

We reserve all rights in this document and in the information contained therein. Reproduction, use or disclosure to third parties without express authority is strictly forbidden. © Frewitt

| | | | | | | | | | |
|---|---|---|---|---|---|---|---|---|---|
| A | Initial version | | | date | 14.06.2011 | Novartis Singapore, SG-Singapore<br>PRO-11-0078<br>400V,50Hz,3P+N+PE Alex 3D | 05 - Bill of material | Type : DM - MF-3 | |
| B | Project follow-up | 25.07.11 | wi | User | lge | | | | |
| | | | | Proved | lge | | | 465085 | Page 18 / 19 |
| Status | change | date | name | Standard | | Origin / Repl. f. / Repl. by | | | |

FREWITT
Frewitt SAs Milling and Handling of Powders
P.O.B. 615, CH-1701 Fribourg, SWITZERLAND
tele +41 26 460 74 00 / fax: +41 26 460 74 01
info@frewitt.com / www.frewitt.com

# Bill of material

| Article Number | Description | Manufacturer | Reference | Device | Quantity |
|---|---|---|---|---|---|
| 456542 | Terminal | PHOENIX CONTACT | 0442079 | -X0 | 2 |
| 457042 | Terminal | PHOENIX CONTACT | 3004977 | -X0 | 1 |
| 414554 | Fuse Terminal | PHOENIX CONTACT | UK5-HESI | -X1 | 1 |
| 456543 | Terminal | PHOENIX CONTACT | 2770011 | -X1 | 13 |
| 456544 | Terminal | PHOENIX CONTACT | 2774211 | -X1 | 2 |
| 464300 | Fuse | SCHURTER | 0034.3114 | -X1 | 1 |
| 456543 | Terminal | PHOENIX CONTACT | 2770011 | -X2 | 10 |
| 456544 | Terminal | PHOENIX CONTACT | 2774211 | -X2 | 2 |
| 456543 | Terminal | PHOENIX CONTACT | 2770011 | -X3 | 10 |
| 456544 | Terminal | PHOENIX CONTACT | 2774211 | -X3 | 2 |
| 406306 | Female connector | AMPHENOL | C016 20G003 100 12 | -X5 | 1 |
| 406308 | Protection cap | AMPHENOL | C016 00U000 010 12 | -X5 | 1 |
| 406309 | Protection cap | AMPHENOL | C016 00V000 000 12 | -X5 | 1 |
| 409686 | Male connector | AMPHENOL | T 3108 001 | -X5 | 1 |
| 443449 | Protection cap | BINDER | 16-0565-00-00 | -X5 | 1 |
| 456548 | Terminal | PHOENIX CONTACT | 3001514 | -XI1 | 1 |
| 456541 | Terminal | PHOENIX CONTACT | 0441083 | -XI2 | 2 |
| 456548 | Terminal | PHOENIX CONTACT | 3001514 | -XI2 | 5 |
| 407586 | Terminal box | STAHL | 8118/212-099 | -XJB1 | 1 |
| 450020 | Terminal box support | FREWITT | 450020 | -XJB1 | 1 |

We reserve all rights in this document and in the information contained therein. Reproduction, use or disclosure to third parties without express authority is strictly forbidden.
© Frewitt

| | | | | | | | | | |
|---|---|---|---|---|---|---|---|---|---|
| A | Initial version | | | date | 14.06.2011 | Novartis Singapore, SG-Singapore<br>PRO-11-0078<br>400V,50Hz,3P+N+PE Atex 3D | FREWITT | 05 - Bill of material | Type : DM - MF-3 |
| B | Project follow-up | 25.07.11 | vri | User | lge | | | | |
| | | | | Proved | lge | | | | 465085 |
| Status | change | date | name | Standard | | Origin | Repl. t. | Repl. by | Page 19 / 19 |

FREWITT

# FAT OQ Test Protocol

SG.TBP.202.M.5216

Mill MF-3

| | |
|---|---|
| **Project Name :** | **Novartis** Singapore MF-3 |
| **Client :** | NOVARTIS SINGAPORE PHARMACEUTICAL |
| **Location :** | SG-Singapore |
| **Customer Order # :** | 4500260529 |
| **Supplier :** | Frewitt Fabrique de Machines S.A. |
| **Object :** | MF-3 |
| **Serial # :** | 11007821034 |

| | |
|---|---|
| **Document Name :** | Qualification OQ MF-3 11007821034 |
| **Document Reference :** | 135550-1-en.doc |
| **Document Version # :** | 01 |

**Pre-Approval:**

**This FAT-OQ test Protocol of the equipment was created, reviewed and accepted by:**

| Name | Signature Reason | Function/ Depart-ment | Signature | Date |
|---|---|---|---|---|
| Karsten Kutnar | Author | Frewitt Project Manager | | 25.08.2011 |
| Yves Grossrieder | Reviewer | Frewitt Project Manager | | 25.08.2011 |
| Rajesh Tralshawala<br>f TOH SUE-ANN | Reviewer | NSPM Qualification Coordinator | | 26 Aug 11 |
| Panicker Shreekumar | Approver | NSPM Process Engineer | | 26 Aug 11 |
| f Shivabalan Kanesan<br>Sony Suroso | Approver | NSPM Automation Engineer | | 26 Aug 11 |
| Teo Szu Hui | Approver | NSPM Technical Project Manager | | 26 Aug 11 |
| Shrinivas Tata | Approver | NSPM Project QA | | 26 Aug 11 |

## Contains

**1 INTRODUCTION ..... 4**
1.1 Purpose ..... 4
1.2 Operation qualification (OQ) ..... 4
1.3 General ..... 4
1.4 Basis ..... 4
**2 FUNCTION TESTS ..... 5**
2.1 Test of each element ..... 5
**3 ATTACHMENTS ..... 15**
**4 OQ – CONCLUSION ..... 16**
**5 DEVIATION SHEET ..... 17**
**6 POST-APPROVAL ..... 18**

# 1 Introduction

## 1.1 Purpose

The purpose of this document is to verify the control function of the machine and the properties of the machine as per documented evidence.

## 1.2 Operation qualification (OQ)

With this operation qualification the functions according to the functional specification are controlled and documented.

## 1.3 General

The protocol "Operation qualification (OQ)" defines the procedure for implementation of the qualification.

## 1.4 Basis

The following references are the basis of these documents

- General standards of GMP
- General standards of safety

# 2 Function tests

## 2.1 Test of each element

| Test No. | Test Description | Expected Result Acceptance Criteria | Actual Results | Fulfilled (Y/N) | Deviation No. | Executed by : (Initial, Date) |
|---|---|---|---|---|---|---|
| 1 | Functional test for [GAS Start] | 1. Ensure the installation is connected to the appropriate electrical and pneumatic supply sources and that all safety fittings are installed.<br>2. Switch the installation on at the [main switch].<br>3. If the [**Motor** Start] light is flashing on and off, check that all the safety fittings are correctly installed. Press [**Motor** Stop/Reset] to reset the installation. The [**Motor** Start] light should go out. Refer to the manual if the problem persists.<br>4. Press the [**GAS** Start] button to start the installation.<br>5. The [**GAS Start**] light should light up<br>6. The gas supply should start | Installation connected to appropriate Electrical and Pneumatic supply and all Safety installed<br>Motor Light flashes. After Resetting light go out.<br>Pressed and started the installation GAS START Lit up GAS supply started | Y<br>Y<br>Y | NA<br>NA<br>NA | 01 Sept'11<br>01 Sept'11<br>01 Sept'11 |
| 2 | Functional test for [GAS Stop] | 1. Start the installation as described under "**GAS** Start function".<br>2. Press the [**GAS** Stop] button<br>3. The gas supply should shut down<br>4. The [**GAS** Start] light should go out | Started GAS Function<br>Pressed stopped GAS shut down. GAS Light went out | Y | N.A | 01 Sept'11 |

| Test No. | Test Description | Expected Result Acceptance Criteria | Actual Results | Fulfilled (Y/N) | Deviation No. | Executed by : (Initial, Date) |
|---|---|---|---|---|---|---|
| 3 | Functional test for [Motor Start] | 1. Ensure the installation is connected to the appropriate electrical and pneumatic supply sources and that all safety fittings are installed.<br>2. Switch the installation on at the [main switch].<br>3. If the [**Motor** Start] light is flashing on and off, check that all the safety fittings are correctly installed. Press [**Motor** Stop/Reset] to reset the installation. The [**Motor** Start] light should go out. Refer to the manual if the problem persists.<br>4. Press the [**Motor** Start] button to start the installation.<br>5. The [**Motor Start**] light should light up<br>6. The rotor should turn or oscillate, according to the drive type | The installation is appropriately connected to Electrical and Pneumatic<br>Switch ON.<br><br>No light Flashing ensures installation is correct.<br><br>Pressed Motor Start The lights lit up<br>The Rotor oscillated | Y<br><br>Y<br><br>Y | NA<br><br>NA<br><br>NA | 01Sep'11<br><br>01 Sept'11<br><br>01 Sept'11 |
| 4 | Functional test for [Motor Stop] | 1. Start the installation as described under "**Motor** Start function".<br>5. Press the [**Motor** Stop] button<br>6. The [**Motor** Start] light should go out<br>7. The rotor should stop turning or oscillating, according to the drive type | Started the Motor Start function Pressed Stop<br>Motor light off.<br>The Rotor stopped | Y | NA | 01Sept'11 |

| Test No. | Test Description | Expected Result Acceptance Criteria | Actual Results | Fulfilled (Y/N) | Deviation No. | Executed by : (Initial, Date) |
|---|---|---|---|---|---|---|
| 5 | Functional test for [Emergency stop] | 1. Start the installation as described under "**Motor** Start function"<br>2. Press the [Emergency stop] button<br>3. The installation should shut down. If the gas supply is started, it should shut down and the [**Gas** Start] light should go out. The [**Motor** Start] light should go out. The rotor should stop turning or oscillating, according to the drive type. Potentially dangerous energy supply sources should be disconnected. It should not be possible to restart the installation until the [Emergency stop] button has been released. It must not restart automatically on release of the [Emergency stop] button. | Started Motor. Pressed emergency switch.<br>The gas (air) went out.<br>The motor START light off.<br>The motor stopped turning<br>The installation cannot start till the Emergency Stop is released. | Y | NA | 01 Sept 11 |

| Test No. | Test Description | Expected Result Acceptance Criteria | Actual Results | Fulfilled (Y/N) | Deviation No. | Executed by : (Initial, Date) |
|---|---|---|---|---|---|---|
| 6 | Functional test for inlet safety | 1. Start the installation as described under "**Motor** Start function ".<br>2. Remove the inlet funnel<br>3. The installation should shut down<br>4. If the gas supply is started, it should shut down and the [**Gas** Start] light should go out<br>5. The [**Motor** Start] light should flash on and off<br>6. The rotor should stop turning or oscillating, according to the drive type<br>7. The installation must not restart automatically on replacement of the inlet funnel | Motor started.<br>Removed inlet funnel.<br>The installation shut down<br>The gas supply shut down.<br>Motor start light flash on and off.<br>Rotor stop oscillating<br>The installation cannot start | Y<br>Y<br>Y<br>Y<br>Y<br>Y<br>Y | NA<br>NA<br>NA<br>NA<br>NA<br>NA<br>NA | 01 sept<br>01 sept<br>01 sept<br>01 sept<br>01 sept<br>01 sept<br>01 sept |

| Test No. | Test Description | Expected Result Acceptance Criteria | Actual Results | Fulfilled (Y/N) | Deviation No. | Executed by : (Initial, Date) |
|---|---|---|---|---|---|---|
| 7 | Functional test for door safety | 1. Open the door<br>2. Dismount the rotor according to chapter 5 - Tools disassembly<br>3. Close the door<br>4. Start the installation as described under "**Motor** Start function<br>5. Open the door<br>6. The installation should shut down<br>7. If the gas supply is started, it should shut down and the [**Gas** Start] light should go out<br>8. The [**Motor** Start] light should flash on and off<br>9. The rotor should stop turning or oscillating, according to the drive type<br>10. The installation must not restart automatically on replacement of the inlet funnel | 1) opened door<br>2) Dismantled<br>3) the Rotor<br>closed door<br>4) started mlc<br>5) Door opened<br>6) mlc stopped<br>7) Gas supply<br>shut down<br>motor start<br>light flashing<br>Rotor stops<br>Installation<br>cannot<br>restart. | Y<br>Y<br>Y<br>Y<br>Y<br>Y<br>Y<br>Y<br>Y | NA<br>NA<br>NA<br>N·A<br>NA<br>NA<br>N·A<br>N·A | 01 Sept 11<br>01 Sept 11<br>01 Sept 11<br>01 Sept 11<br>01 Sept 11<br>01 Sept 11<br>01 Sept 11<br>01 Sept 11 |

| Test No. | Test Description | Expected Result Acceptance Criteria | Actual Results | Fulfilled (Y/N) | Deviation No. | Executed by : (Initial, Date) |
|---|---|---|---|---|---|---|
| 8 | Functional test for outlet safety | 1. Start the installation as described under "**Motor** Start function ". | Installation Started | Y | NA | 01sept11 |
| | | 2 ~~8~~. Remove the outlet funnel | outlet funnel removed | Y | NA | 01sept11 |
| | | 3 ~~9~~. The installation should shut down | m/c stops | Y | NA | 01sept11 |
| | | 4 ~~10~~. If the gas supply is started, it should shut down and the [**Gas** Start] light should go out | GAS supply stops and light goes out | Y | NA | 01sept11 |
| | | 5 ~~11~~. The [**Motor** Start] light should flash on and off | Motor light flashing | Y | NA | 01sept11 |
| | | 6 ~~12~~. The rotor should stop turning or oscillating, according to the drive type | Rotor stop oscillating | Y | NA | 01sept11 |
| | | 7 ~~13~~. The installation must not restart automatically on replacement of the outlet funnel | The m/c do not start | Y | NA | 01sept11 |
| 9 | Functional test for cover inlet safety | 1. Start the installation as described under "**Motor** Start function ". | Motor started | Y | NA | 01sept11 |
| | | 2. Open the cover on inlet funnel. | Cover opened. | Y | NA | 1sept11 |
| | | 3. The installation should shut down | m/c stopped | Y | NA | 01sept11 |
| | | 4. If the gas supply is started, it should shut down and the [**Gas** Start] light should go out | GAS supply shuts off. and light goes off. | Y | NA | 01sept11 |
| | | 5. The [**Motor** Start] light should flash on and off | Motor Start light flashing | Y | NA | 01sept11 |
| | | 6. The rotor should stop turning or oscillating, according to the drive type | Rotor stops | Y | NA | 01sept11 |
| | | 7. The installation must not restart automatically on on close the cover on inlet funnel | m/c stops and cannot Restart outlet funnel closed | Y | NA | 01sept11 |

| Test No. | Test Description | Expected Result Acceptance Criteria | Actual Results | Fulfilled (Y/N) | Deviation No. | Executed by : (Initial, Date) |
|---|---|---|---|---|---|---|
| 10 | Functional test of the magneto-thermal circuit-breaker | EXPLOSION HAZARD<br>If the installation is in an area subject to the risk of explosions, move it to a safe location.<br>1. Open the switch cabinet | opened. | Y | NA | 01Sept11 |
| | | 2. If the installation has an explosion-proof box, open the box | opened the panel. | Y | NA | 01Sept11 |
| | | 3. Start the installation as described under "**Motor** Start function". | motor started Start | Y | NA | 01Sept11 |
| | | 4. Press the red button of the magnetothermal circuit-breaker to simulate the operation of the circuit-breaker (see circuit diagram for identification details). | Pushed the switch in the test mode to simulate the circuit breaker. | Y | | 01Sept11 |
| | | 5. The installation should shut down | The installation shuts down | Y | NA | 01Sept11 |
| | | 6. If the gas supply is started, it should shut down and the [**Gas** Start] light should go out | The gas supply shuts off. | Y | NA | 01Sept11 |
| | | 7. The [**Motor** Start] light should flash on and off | Motor light keeps flashing | Y | NA | 01Sept11 |
| | | 8. The rotor should stop turning or oscillating, according to the drive type | The Rotor stops. | Y | NA | 01Sept11 |
| | | 9. The installation must not restart automatically when the magnetothermal circuit-breaker is rearmed | The installation do not restart when the circuit breaker is rearmed | Y | NA | 01Sept11 |

| Test No. | Test Description | Expected Result Acceptance Criteria | Actual Results | Fulfilled (Y/N) | Deviation No. | Executed by : (Initial, Date) |
|---|---|---|---|---|---|---|
| 11 | Testing of the pressure switch | 1. Start the installation as described under "**Gas** Start function | Installation started. | Y | NA | 01 Sept 11 |
| | | 2 ~~8~~. Start the installation as described under "**Motor** Start function. | Machine motor started | Y | NA | 01 Sept 11 |
| | | 3 ~~9~~. Adjust the pressure control to reduce the pressure to below the threshold value for the pressure switch shown on the pneumatic diagram | Pressure reduced below 0.8 bar as shown on Pneumatic diagram. | Y | NA | 01 Sept 11 |
| | | 4 ~~10~~. The installation should shut down | Installation shuts down. | Y | NA | 01 Sept 11 |
| | | 5 ~~11~~. If the gas supply is started, it should shut down and the [**Gas** Start] light should go out | GAS supply shuts off. and lights go out. | Y | NA | 01 Sept 11 |
| | | 6 ~~12~~. The [**Motor** Start] light should flash on and off | motor light flashes | Y | NA | 01 Sept 11 |
| | | 7 ~~13~~. The rotor should stop turning or oscillating, according to the drive type | Rotor stop | Y | N.A | 01 Sept 11 |
| | | 8 ~~14~~. During regulation to the initial pressure the installation should not start automatically | After Regulation back to initial Pressure the mk don't start. | Y | N.A | 01 Sept 11 |
| | | 9 ~~15~~. After the test, reset the initial pressure as per the pneumatic | Reset the pressure back 1.2 bar. | Y | N.A | 01 Sept 11 |
| 12 | Check Vibrator operation | Vibrator operation in inlet and outlet | Vibrator in operation in inlet and outlet. | Y | N.A | 01 Sept 11 |

| Test No. | Test Description | Expected Result Acceptance Criteria | Actual Results | Fulfilled (Y/N) | Deviation No. | Executed by : (Initial, Date) |
|---|---|---|---|---|---|---|
| 13 | Speed calibration | 1. Shut the installation down as described under "Stop Function".<br>2. Switch the installation off at the [main switch].<br>3. Remove the motor shield.<br>4. Set up the speed measurement according to the procedure for your measurement device. For example:<br> 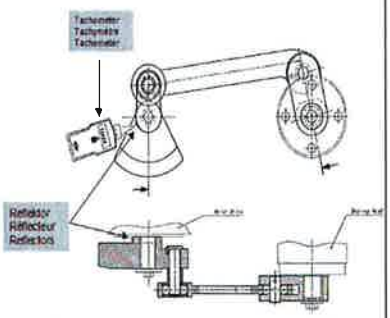 <br>5. Switch the installation on at the [main switch]<br>6. Start the installation as described under "Start function".<br>7. Set the speed on maximum, pos. 18 or 24 according to the model, on the speed adjustment dial.<br>8. Measure the speed with a calibrated tachometer and compare against the speed display.<br>9. Set the speed on minimum on the speed adjustment dial.<br>10. Measure the speed with a calibrated tachometer and compare against the speed display.<br>11. Set the speed on any other two positions.<br>Measure those two speeds with a calibrated tachometer and compare against the speed display. | Shut down after pressing STOP<br>Switch off the main switch<br>Removed motor shield<br>Setting up done<br>Switch on the MF<br>Start the MF<br>Set speed to max: at pos. '10' of the pot.<br>Measure the speed with tachometer and compare with Display<br>Set speed to min: pos. 0' of the pot<br>Measure the speed with tachometer and compare with Display<br>the same with all other positions of the pot.<br>1, 2, 3, 4, 5, 6, 7, 8, 9<br>Refer Sec 11 | Y<br>Y<br>Y<br>Y<br>Y.<br>Y.<br>Y.<br>Y.<br>Y<br>Y<br>Y | NA<br>NA<br>NA<br>NA<br>n/a<br>n/a<br>n/a<br>n/a<br>n/a<br>n/a | 01 Sept 11<br>01 Sept 11<br>01 Sept 11<br>01 Sept 11<br>01.09.11 USC<br>01.09.11 USC<br>01.09.11 USC<br>01.09.11 USC<br>01.09.11 USC<br>01.09.11 USC |

| Test No. | Test Description | Expected Result Acceptance Criteria | Actual Results | Fulfilled (Y/N) | Deviation No. | Executed by : (Initial, Date) |
|---|---|---|---|---|---|---|
| 15 | Test function of the lifting tower | Regarding to Servolift specification. Test all operation. | Tested all operat | Y | NA | 31 Aug 11 |

# 3 Attachments

| Attachment No. | Description | No. of Pages |
|---|---|---|
| 1. | ~~Alarm test~~ Script | |
| | | |
| | | |
| | | |
| | | |
| | | |
| | | |
| | | |
| | | |
| | | |
| | | |
| | | |
| | | |
| | | |
| | | |
| | | |
| | | |
| | | |
| | | |
| | | |

# 4 OQ – Conclusion

# 5 Deviation Sheet

| | |
|---|---|
| **Deviation To Test No:** | |
| **Description of Deviation** | |
| **Evaluation and Proposed Corrective Action** | |
| **Resolution** | |

**Deviation Prepared By**

| Name | Signature Reason | Department / Function | Date | Signature |
|---|---|---|---|---|
| | Author | | | |

**Deviation Accepted By**

| Name | Signature Reason | Department / Function | Date | Signature |
|---|---|---|---|---|
| | Approver | | | |

# 6 Post-Approval

**This FAT-OQ test Protocol of the equipment has been executed and accepted by:**

| Name | Signature Reason | Function/ Department | Signature | Date |
|---|---|---|---|---|
| Yves Grossrieder | Reviewer | Frewitt Project Manager | | 02.05.2017 |
| Rajesh Tralshawala | Reviewer | NSPM Qualification Coordinator | | |
| Panicker Shreekumar | Approver | NSPM Process Engineer | | |
| Sony Suroso | Approver | NSPM Automation Engineer | | |
| Teo Szu Hui | Approver | NSPM Technical Project Manager | | |
| Shrinivas Tata | Approver | NSPM Project QA | | |