DA = opening angle / Öffnungswinkel GW = gap width / Stegabstand BH = base height / Steghöhe	1,414 x a a=0,7 x tmin
Note: -exposed inside edges shall be chamfered or rounded	21-802-1...4-8 ASME

Technische Daten technical dates		
	Beschickungsraum Vessel	-
Inhalt capacity	260 Liter overall (190l working volume)	-
zul. Betriebsüberdruck max. allowable working pressure	internal : 43.52 psi (3 bar) external : 14.5 psi (1 bar=vacuum)	-
max. Betriebstemperatur design temperature	203 °F (95 °C)	-
min. Betriebstemperatur minimum design metal temperature	14 °F (-10 °C)	-
Prüfdruck test pressure	56.6 psi (3,9 bar)	-
Umrechungsfaktor Sect VIII-I Ed.2019 Appendix GG-3 conversion factor	1 psi = 0.06894757 bar	
Werkstoff materials	siehe Stückliste see Bill of Materials	
Werkstoffnachweise material test report	bei Apparate- & Behältertechnik Heldrungen GmbH hinterlegt retained at A & B Heldrungen GmbH	
Korrosionszuschlag Corrosion Allowance	- none	
Zusatzbelastung additional load	none none	
Schweißprozeß welding process		
Schweißverfahren welding process	m-WIG GTAW-manual	Nahtfaktor joint efficiency 0.7
Nahtvorbereitung joint preparation	siehe Details see Details	Wärmebehandlung heat treatment no
Zusatzwerkstoff filler metal	ER 316L	Unbemaßte Kehlnähte not measured fillet weld 0,7 x t min
Oberflächenbearbeitung surface conditions	innenseitig inside	Außenfl./isolierung outside/insulation
	Ra<=0,8 µm e-poliert e-polished	Ra<=1,6µm

Prüfungen examinations	
Zerstörungsfreie Prüfungen non-destructive examinations	ASME CODE Section V, Edition 2019 impact testing not required per UHA-51-(d) (1) (a)
Art der zerstörungsfreien Prüfungen typ non-destructive test	na acc. to UG 93
Ausführung execution	NEC 500 class I Divison 2 (inside) / no zone (outside) for line 1 (21-802-1-8) / NEC 500 class I Divison 2 (outside) for line 2-4 (21-802-2..4-8)
Abnahme durch inspection by	HSB
Erdbebenzone seismic zone	zone D

Berechnung und Konstruktion design and construction			
ASME CODE Section VIII Div. I, Edition 2019 ASME CODE Section VIII Div. I, Edition 2019			
Toleranzen general tolerances - tolerances : DIN 28005-1 - permissible out-of-roundness UG-80 / UG-81 - UG-46(a): not required - UW-33: joint category A - weld seam surfaces in acc. to UW-35		loadings UG-22: a) - internal pressure, external pressure d) - vessel supports (incl. lugs, rings, skirts, saddles, legs etc.) e) -cyclic and dynamic reactions j) -test pressure and coincident static head acting during the test	
Kommissionsnummer manufacturers no.	see table	Gewicht weight	270 kg
Produkt contents	unknown UW-2: not lethal	Dichtung gasket	EPDM PTFE covered EPDM
Lastwechselanzahl cyclic reactions	8000		
Hersteller manufacturer	A & B Heldrungen GmbH	Baujahr built	2021
Besteller purchaser	Syntegon	Aufstellort location of installation	

date			
signature			
	Chief Designer	Quality Control Manager	Authorized Inspector

NB#	?
CRN#	n.a.

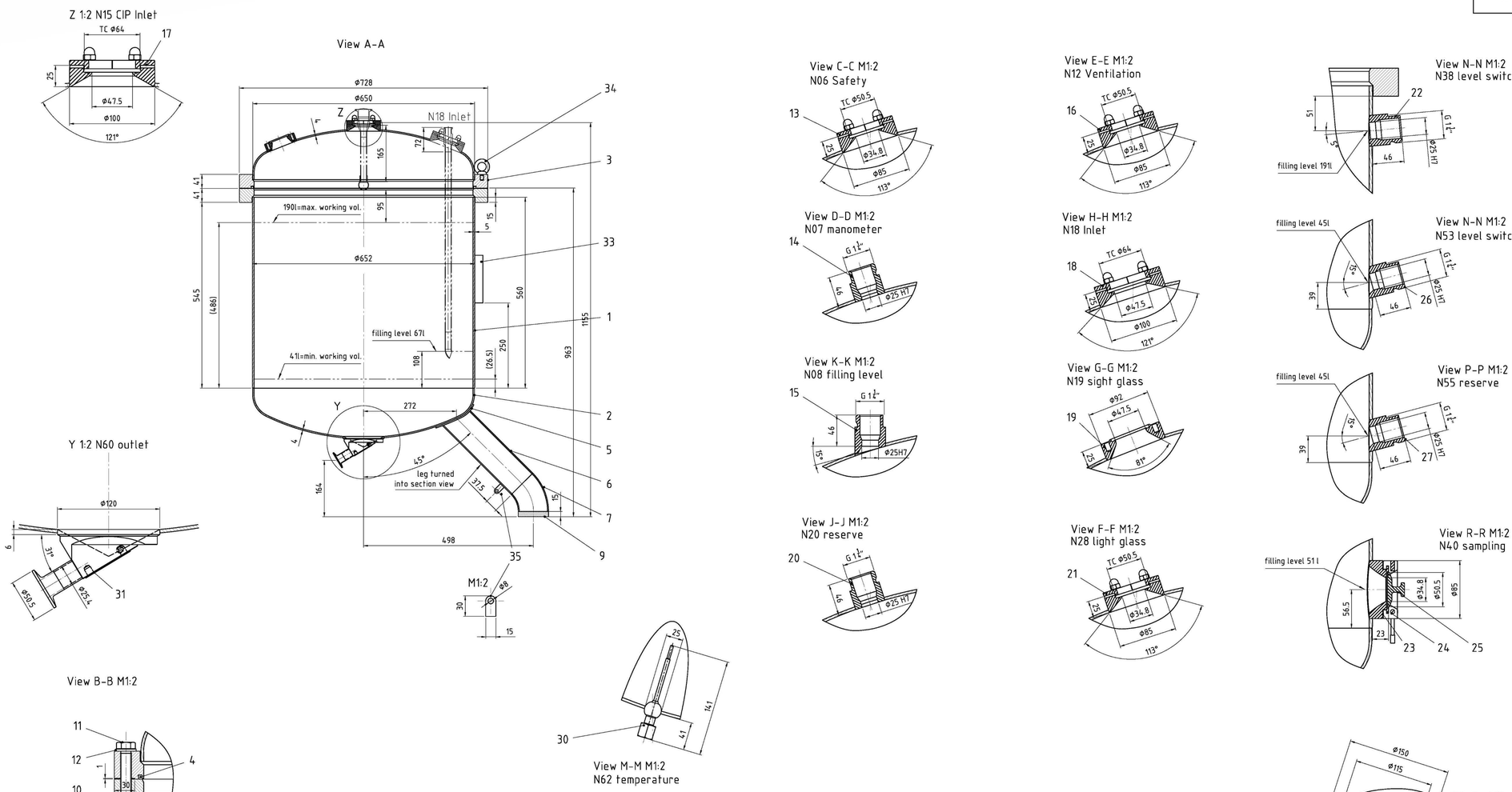

Stutzentabelle / Nozzle List							
Stutzen Nr. nozzle no.	DN	Norm / standard	Typ / type	Name / name	Position	Bemerkung / remark	
N06	1½"	DIN11866 series C	AWH-Connect	safety valve	TH / R200 / 345°		
N07	Ø25 H7	manufacturer standard	Ingold PL=46	manometer	TH / R200 / 305°		
N08	Ø25 H7	manufacturer standard	Ingold PL=46; 15°	filling level	TH / R200 / 45°	radar	
N12	1½"	DIN11866 series C	AWH-Connect	ventilation	TH / R200 / 270°		
N15	2"	DIN11866 series C	AWH-Connect	CIP inlet	TH / R0 / -		
N18	2"	DIN11866 series C	AWH-Connect	inlet	TH / R239 / 190°		
N19	2"	DIN11866 series C	block flange DIN11864-2	sight glass	TH / R239 / 180°		
N20	Ø25 H7	manufacturer standard	Ingold PL=46	reserve	TH / R200 / 90°		
N28	1½"	DIN11866 series C	AWH-Connect	light glass	TH / R200 / 225°		
N38	Ø25 H7	manufacturer standard	Ingold PL=46; 5°	level switch max.	shell / - / 60°		
N40	1"	DIN11866 series C	Kest	sampling	shell / - / 90°		
N53	Ø25 H7	manufacturer standard	Ingold PL=46; 15°	level switch min.	shell / - / 60°		
N55	Ø25 H7	manufacturer standard	Ingold PL=46; 15°	reserve	shell / - / 300°		
N60	1"	DIN11866 series C	DIN 32676	outlet	BH / R0 / -	bottom valve	
N61	D150	manufacturer standard	flange	agitator	BH / R200 / 0°		
N62	G½"	manufacturer standard	ferrule	temperature	BH / R200 /325°		

Pos.	Anz	Benennung / Name	Norm / Mat.	WAZ	Name	Art.-Nr.
1	1	plate 5 x 560 x 2033	ASME II-A SA-240-316L	3.1	cylinder	
2	2	torispherical head D=650 x 4 (smin=1,929)	ASME II-A SA-240-316L	3.1	head	
3	2	DxT38/640 x h=45	ASME II-A SA-182-316L	3.1	flange	
4	1	O-Ring Ø645,9 x 6,99	EPDM (USP-CLVI)			
5	4	plate 4 x Ø130	ASME II-A SA-240-304		reinforcem. leg	
6	4	pipe Ø88.9 x 3.2..286	ASME II-A SA-312-304		leg	
7	4	elbow Ø88.9 x 3.2..45°	ASME II-A SA-312-304		leg	
9	4	plate 15 x Ø88.9	ASME II-A SA-240-304		base plate	
10	12	heagon nut - DIN 934 - M16	ASME II-A SA-193-B8CL1	3.1		
11	12	hexagon screw - DIN 933 - M16 x 110	ASME II-A SA-193	3.1		
12	24	washer - DIN 125 - A 17	ASME II-A SA-240-304			
13	1	AWH-Connect 1 1/2"	ASME II-A SA-479-316L	3.1	N06 safety	
14	1	Ingold Ø25 H7 PL=46	ASME II-A SA-479-316L	3.1	N07 manometer	
15	1	Ingold Ø25 H7 PL=46 15°	ASME II-A SA-479-316L	3.1	N08 filling level	
16	1	AWH-Connect 1 1/2"	ASME II-A SA-479-316L	3.1	N12 ventilation	
17	1	AWH-Connect 2"	ASME II-A SA-479-316L	3.1	N15 CIP	
18	1	AWH-Connect 2"	ASME II-A SA-479-316L	3.1	N18 inlet	
19	1	block flange DIN 11864-2 2" h=25	ASME II-A SA-182-316L	3.1	N19 sight glass	
20	1	Ingold Ø25 H7 PL=46	ASME II-A SA-479-316L	3.1	N20 reserve	
21	1	AWH-Connect 1 1/2"	ASME II-A SA-479-316L	3.1	N28 light glass	
22	1	Ingold Ø25 H7 PL=46 5°	ASME II-A SA-479-316L	3.1	N38 lev. sw. max.	
23	1	Kest block flange 1" h=25	ASME II-A SA-479-316L	3.1	N40 sampling	
24	1	KEST Lock snap ring TC50.5	ASME II-A SA-479-316L		N40 sampling	
25	1	Kest Blind TC with knob TC50.5	ASME-BA SA-479-316L	3.1	N40 sampling	
26	1	Ingold Ø25 H7 PL=46 15°	ASME II-A SA-479-316L	3.1	N53 lev. sw. min.	
27	1	Ingold Ø25 H7 PL=46 15°	ASME II-A SA-479-316L	3.1	N55 reserve	
28	1	welding ring Ø150mm	ASME II-A SA-182-316L	3.1	N61 agitator	
29	1	Zeta Typ BMRT 80 PI V S Dk Y, 0,18 kW, Ra 0,6 ep, SiC	ASME II-A SA-182-316L	3.1	N61 agitator	
30	1	TM411	ASME II-A SA-479-316L	3.1	N62 temperature	
31	1	GemÜ bottom valve Typ 643 25BBB405M02A T 1503	ASME II-A SA-479-316L	3.1	N60 outlet	
33	1	plate 2,5	ASME II-A SA-240-316L		shield bridge	
34.	3	ringscrew DIN580 M10	ASME II-A A2			
35	1	plate 3 x 30 x 15	ASME II-A SA-240-304	-	ground	

A&B | Apparate- & Behälbertechnik Heldrungen GmbH

Ingenieurvorschrift: DIN 28005-1
Oberfläche: DIN 1302 Reihe 2
Maßstab: 15 Position - Menge -
Datum: 16.02.2021 Name: Kabitz

vessel 190l

C	div.	04.05.21	Kab
B	div.	22.03.21	Kab
A	nozzles added	01.03.21	Kab
Änd.	Änderungen	Datum	Name

Diese Zeichnung darf ohne unserer Genehmigung weder direkt noch fahrlässig nach Kenntnisnahme Dritten zugänglich gemacht werden.
Allgemeine Toleranzen DIN 7168 mittel
Mit Grat - Mit Fett

Bearb. Gepr. Norm Dehnung

21-802-1...4-8 C

Blatt 1/1

Apparate- & Behälbertechnik GmbH, Schafrichtweg 8, 06179 Heldrungen
Tel.: 034671/5-0 Fax: 034671/5-1 info@abbgmbh.de